BLUE EARTH COUNTY HIGHWAY DEPARTMENT

N

END CO. PROJ. No. 8146
STA 423 + 72

BRIDGE No. 90524
STA 254+69 TO STA 254+92 = 23'

BRIDGE No. 90523
STA 182+86 TO 183+19 = 33'

BEGIN CO. PROJ. No. 8146
STA 153 + 27

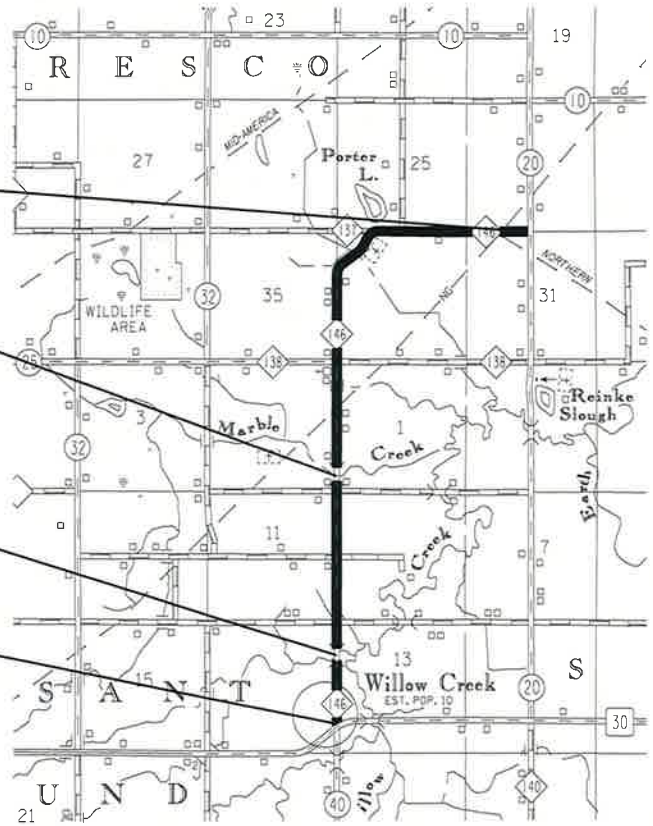

CONSTRUCTION PLAN FOR BITUMINOUS OVERLAY & AGGR. SHOULDER

COUNTY ROAD 146

BETWEEN: TH 30 AND CSAH 20
FROM: A PT. 1509.85' S. OF THE W 1/4
SEC 13-105-29
TO: THE N 1/4 COR. SEC. 31-106-28

GROSS LENGTH	27,045.00	FEET	5.122	MILES
BRIDGE LENGTH	56.00	FEET	0.011	MILES
NET LENGTH	26,989.00	FEET	5.111	MILES

OVERLAYED IN: 1997 UNDER CO. PROJ. No. 846
GRADED IN: 1952 UNDER SP 07-502-07 S 76

DESIGN DESIGNATION

ADT (Current Year) 113 2016
ADT (Future Year) 135 2036
ADT (Heavy Commercial)
ESAL 41,000
10 TON DESIGN
DESIGN SPEED 40 MPH
DESIGN SPEED NOT ACHIEVED AT:
SOIL FACTOR 130
SHOULDER WIDTH 2'
STOPPING SIGHT DISTANCE BASED ON
3.5' HEIGHT OF EYE
0.5' HEIGHT OF OBJECT

INDEX OF SHEETS

SHEET No. 1 TITLE
SHEET No. 2 ESTIMATED QUANTITIES
SHEET No. 3 STANDARD PLATES
SHEET No. 4-6 CHARTS
SHEET No. 7 TYPICAL SECTIONS
SHEET No. 8 DETAILS

PLAN NOT TO SCALE

GOVERNING SPECIFICATIONS

THE 2016 EDITION OF THE MINNESOTA DEPARTMENT OF TRANSPORTATION'S "STANDARD SPECIFICATIONS FOR HIGHWAY CONSTRUCTION", SHALL GOVERN.

ALL APPLICABLE FEDERAL, STATE AND LOCAL LAWS AND ORDINANCES WILL BE COMPLIED WITH, IN THE CONSTRUCTION OF THIS PROJECT.

I HERE BY CERTIFY THAT THIS PLAN, SPECIFICATION, OR REPORT WAS PREPARED BY ME OR UNDER MY DIRECT SUPERVISION AND THAT I AM A DULY LICENSED PROFESSIONAL ENGINEER UNDER THE LAWS OF THE STATE OF MINNESOTA.

COUNTY ENGINEER — RYAN THILGES

DATE July 28, 2016 — LIC. No. 45887

CO. PROJ. No. 8146 SHEET No. 1 OF 8 SHEETS

146 BITUM.dgn 7/14/2016 2:13:38 PM

ESTIMATED QUANTITY

	ITEM No.	ITEM	UNIT	CR # 146	NON PART.	TOTAL
(1)	2118.501	AGGREGATE SURFACING, CL-2 (M)	TON	168	0	168
(1)	2118.501	AGGREGATE SURFACING,CL-1 (M)	TON	1763	0	1763
(1)	2232.501	MILL BITUMINOUS SURFACE	SQ YD	1625	0	1625
(1)	2357.502	BITUMINOUS MATERIAL FOR TACK COAT	GAL	3539	0	3539
(1)	2360.501	TYPE SP 12.5 WEARING COURSE MIX (2,B)	TON	6504	0	6504
(2)	2580.603	INTERIM PAVEMENT MARKING	LIN FT	2158	0	2158
	2582.501	PAVEMENT MESSAGE - PAINT	SQ FT	98.04	0	98.04
	2582.502	4" SOLID LINE - PAINT	LIN FT	61609	0	61609
	2582.502	24" SOLID LINE - PAINT	LIN FT	22	0	22
	2582.502	4" BROKEN LINE - PAINT	LIN FT	4040	0	4040
	2582.502	4" DOUBLE SOLID LINE - PAINT	LIN FT	7125	0	7125

(1) BASIS OF PAYMENT SPECIFIED IN SPEC. 1903 SHALL BE MODIFIED TO PRECLUDE ANY PRICE ADJUSTMENT FOR INCREASED OR DECREASED QUANTITIES.
(2) PLACED ON EVERY LIFT, REMOVED BEFORE NEXT LIFT AND PRIOR TO STRIPING.

CERT. BY Ryan Thilges PROFESSIONAL ENGINEER LIC. No. 45887 JULY 12, 2016 CO. PROJ. No. 8146 SHEET No. 2 OF 8 SHEETS

BASIS FOR PLANNED QUANTITIES

AGGREGATE SHOULDERING, & SURFACING
COMPACTED DRY DENSITY - 140 LBS. PER CU. FT.

BITUMINOUS SURFACE
BITUM. MAT'L FOR TACK COAT 0.05 GALS. PER SQ. YD.

BITUM. MAT'L FOR WEAR COURSE AC (PG 58S-28) 5.8% BY WEIGHT

BITUM. COURSES, 110 LBS. PER 1" / SQ. YD.

THE FOLLOWING STANDARD PLATES AS APPROVED BY THE FHWA SHALL APPLY

	STANDARD PLATES
PLATE No.	DESCRIPTION
8000I	STANDARD BARRICADES

CERT. BY Ryan Hilges PROFESSIONAL ENGINEER LIC. No. 45887 JULY 12, 2016 CO. PROJ. No. 8146 SHEET No. 3 OF 8 SHEETS

SHLD. & SURF. QUANTITIES
ROAD # CR 146
PROJECT # CO. PROJ. No. 8146

LOCATION	LENGTH FEET	AVER WIDTH FEET	DEPTH INCHES	AGGR. SHLD. TON	AGGR. SURF. TON
SHOULDER CL-1M					
Willow Creek Road					
STA 0 + 0 TO STA 1 + 67 RT	167	2	2.5	5	
STA 0 + 0 TO STA 3 + 64 LT	364	2	2.5	11	
CR 146					
STA 153 + 27 TO STA 182 + 86 RT	2959	2	2.5	86	
STA 183 + 19 TO STA 254 + 69 RT	7150	2	2.5	209	
STA 254 + 92 TO STA 423 + 72 RT	16880	2	2.5	492	
STA 153 + 27 TO STA 182 + 86 LT	2959	2	2.5	86	
STA 183 + 19 TO STA 254 + 69 LT	7150	2	2.5	209	
STA 254 + 92 TO STA 297 + 51 LT	4259	2	2.5	124	
STA 300 + 63 TO STA 423 + 72 LT	12309	2	2.5	359	
MATERIAL FOR FIELD ENTRANCES				182	
AGGR. SURFACING CL-2 (M)					
13 DRIVEWAYS @ 7 TONS					91
11 INTERSECTIONS @ 7 TONS					77
TOTAL				1763	168

P:\BITUM\pending overlays\CR 146\[146 AGGR.xls]A

CERTIFIED BY Ryan Thilges
PROFESSIONAL ENGINEER RYAN THILGES

LIC. NO. 45887 JULY 12, 2016

SHOULDERING & SURFACING QUANTITIES

CO. PROJ. No. 8146 SHEET 4 OF 8 SHEETS

CR 146 SUPERPAVE BITUM. CALCULATIONS

LOCATION							LENGTH FEET	AVER WIDTH FEET	DEPTH INCHES	WEAR TON	MAT'L FOR TACK COAT GAL
BITUM. WEAR											
Willow Creek Road											
	STA	0 + 0	TO	STA	1 + 67		167	22	1.5	34	20
	STA	1 + 67	TO	STA	3 + 64		197	46	1.5	83	50
CR 146											
	STA	153 + 27	TO	STA	182 + 86		2959	22	1.5	597	362
Bridge	STA	182 + 86	TO	STA	183 + 19		33	25	1.5	8	5
	STA	183 + 19	TO	STA	254 + 69		7150	22	1.5	1442	874
Bridge	STA	254 + 69	TO	STA	254 + 92		23	25	1.5	5	3
	STA	254 + 92	TO	STA	297 + 0		4208	22	1.5	849	514
Curb & Gutter Area	STA	297 + 0	TO	STA	300 + 63		363	64	1.5	213	129
	STA	300 + 63	TO	STA	333 + 77		3314	22	1.5	668	405
Bot. of Curve	STA	333 + 77	TO	STA	342 + 78		901	23.5	1.5	194	118
	STA	342 + 78	TO	STA	348 + 77		599	22	1.5	121	73
Bot. of Curve	STA	348 + 77	TO	STA	354 + 86		609	23.5	1.5	131	80
Bot. of Curve	STA	354 + 86	TO	STA	363 + 32		846	23.5	1.5	182	110
	STA	363 + 32	TO	STA	423 + 72		6040	22	1.5	1218	738
	11	INTERSECTIONS @		40	TONS					440	22
	12	DRIVEWAYS @		25	TONS					300	24
	6	MAILBOX PADS @		175	LENGTH		1050	2	1.5	19	12
P:\BITUM\pending overlays\CR 146\[146 SUPERPAVE.xls]A								TOTAL		6504	3539

MILL BITUM. SURFACE

	STATION	TO	STATION	LOC.	LENGTH	WIDTH	SQ.YD.
TH 30	0 + 0	TO	0 + 14	CL	14	89	138
TH 30	153 + 27	TO	153 + 41	CL	14	72	112
Taper	181 + 86	TO	182 + 86	CL	100	22	244
Bridge	182 + 86	TO	183 + 19	CL	33	25	92
Taper	183 + 19	TO	184 + 19	CL	100	22	244
Taper	253 + 69	TO	254 + 69	CL	100	22	244
Bridge	254 + 69	TO	254 + 92	CL	23	25	64
Taper	254 + 92	TO	255 + 92	CL	100	22	244
Curb & Gutt.	297 + 51	TO	300 + 63	LT	312	7	243
P:\BITUM\pending overlays\CR 146\[146 MILL.xls]A						TOTAL	1,625

TAPER 100' AWAY FROM BRIDGE ENDS STARTING AT 0" AND BE AT 1.5" AT BRIDGE END AND THROUGH THE BRIDGE AND TAPER OUT 100' TO 0"
THE MILLINGS SHALL BECOME PROPERTY OF THE CONTRACTOR.

SUPERPAVE & MILLING QUANTITES

CERTIFIED BY Ryan Thilges LIC. NO. 45887 JULY 12, 2016 CO. PROJ. No. 8146 SHEET No. 5 OF 8 SHEETS

Station	to	Station	LOC.	WHITE - PAINT 4" SOLID LIN FT	24" SOLID LIN FT	PVT MSG STOP AHEAD EACH
WILLOW CREEK RD						
0 + 40	to	3 + 64	RT	324		
0 + 40	to	3 + 64	LT	324		
CR 146						
153 + 58	to	195 + 9	LT		11	
153 + 58	to	195 + 9	LT	4,151		
153 + 67	to	154 + 87	RT	120		
156 + 7	to	195 + 4	RT	3,897		
161 + 93			LT			49.02
196 + 2	to	221 + 63	RT	2,561		
196 + 11	to	221 + 53	LT	2,542		
222 + 33	to	248 + 18	RT	2,585		
222 + 47	to	248 + 8	LT	2,561		
248 + 94	to	300 + 54	RT	5,160		
248 + 98	to	300 + 38	LT	5,140		
301 + 46	to	359 + 22	LT	5,776		
301 + 57	to	423 + 72	RT	12,215		
361 + 40	to	370 + 56	LT	916		
371 + 47	to	423 + 42	LT	5,195		
415 + 23						49.02
423 + 72					11	
			TOTALS	**53,467**	**22**	**98.04**

Station	to	Station	LOC	YELLOW - PAINT 4" BROKEN LIN FT	4" SOLID LIN FT	4" DBL LIN FT
WILLOW CREEK RD						
0 + 40	to	3 + 64	CL			324
CR 146						
243 + 59	to	265 + 19	CL			2,160
328 + 73	to	375 + 14	CL			4,641
153 + 58	to	161 + 23	CL LT		765	
181 + 67	to	189 + 75	CL RT		808	
190 + 94	to	199 + 95	CL LT		901	
234 + 16	to	243 + 59	CL RT		943	
265 + 19	to	274 + 44	CL LT		925	
274 + 44	to	280 + 19	CL RT		575	
283 + 64	to	289 + 11	CL LT		547	
319 + 26	to	328 + 73	CL RT		947	
375 + 14	to	384 + 60	CL LT		946	
415 + 87	to	423 + 72	CL RT		785	
153 + 58	to	181 + 67	CL	570		
181 + 67	to	190 + 94	CL	180		
190 + 94	to	234 + 16	CL	870		
234 + 16	to	243 + 59	CL	180		
265 + 19	to	274 + 44	CL	180		
274 + 44	to	283 + 64	CL	180		
283 + 64	to	319 + 26	CL	710		
319 + 26	to	328 + 73	CL	190		
375 + 14	to	415 + 87	CL	820		
415 + 87	to	423 + 72	CL	160		
			TOTALS	**4,040**	**8,142**	**7,125**

STRIPING

P:\BITUM\16 bitum\CR 146\[146 Striping.xls]Strip

CERTIFIED BY Ryan Thilges
RYAN THILGES PROFESSIONAL ENGINEER

LIC. NO. 45887 JULY 12, 2016

TYPICAL SECTION

STA 153+27 TO STA 333+77 STA 363+32 TO STA 423+72
STA 342+78 TO STA 348+77

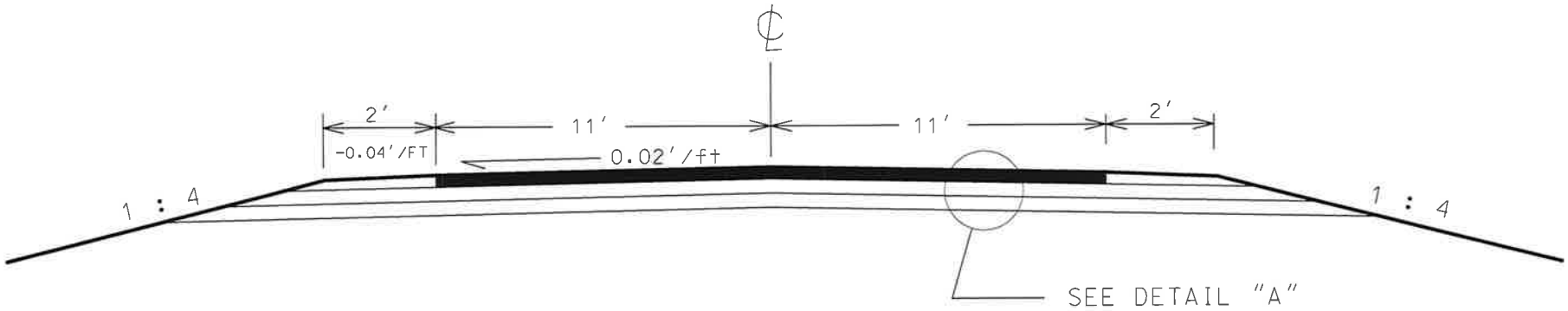

TYPICAL CURVE SECTION

STA 333+77 TO STA 342+78 RT STA 354+86 TO STA 363+32 RT
STA 348+77 TO STA 354+86 LT

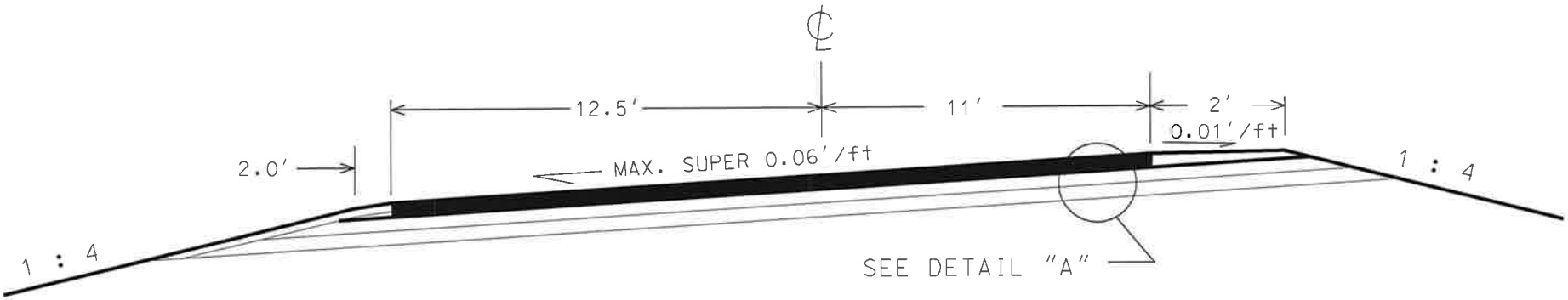

DETAIL "A"

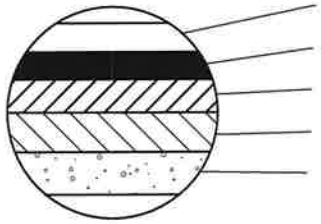

1.5" SP WEARING COURSE MIXTURE (2360)
INPLACE 1.5" SP WEARING COURSE MIXTURE
INPLACE 2" PLANT MIXED BITUM. (2331)
INPLACE 3.5" BITUM. BASE & BITUM. SURFACE
INPLACE 5" AGGR. BASE CL-5 (2211)

CERT. BY Ryan Thilges PROFESSIONAL ENGINEER LIC. No. 45887 JULY 12, 2016 CO. PROJ. No. 8146 SHEET No. 7 OF 8 SHEETS

BITUMINOUS APPROACHES AND ENTRANCES DETAIL

FIELD ENTRANCE

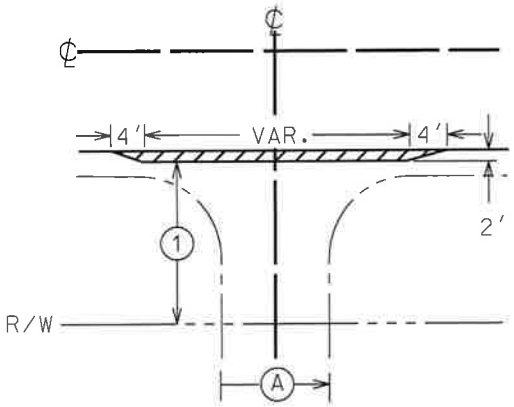

(A) 20′ FOR SINGLE F.E.
28′ FOR DOUBLE F.E.

MINIMUM DEPTH 1.5″ OF BIT

ROAD APPROACH

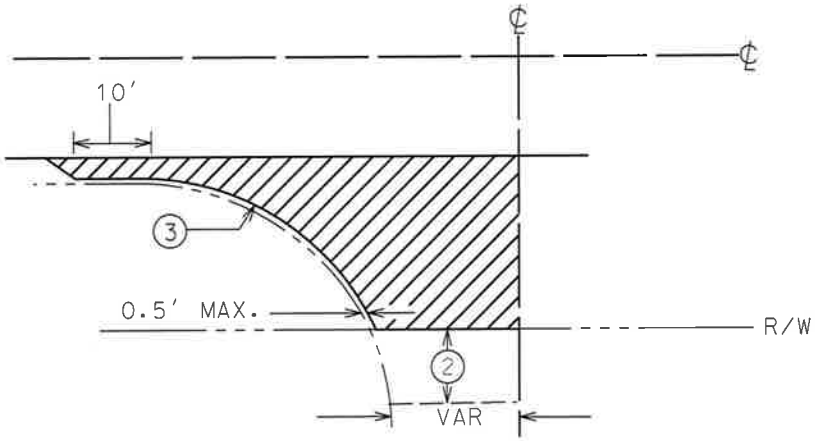

MINIMUM DEPTH 1.5″ OF BIT

FARM & OTHER ENTRANCES

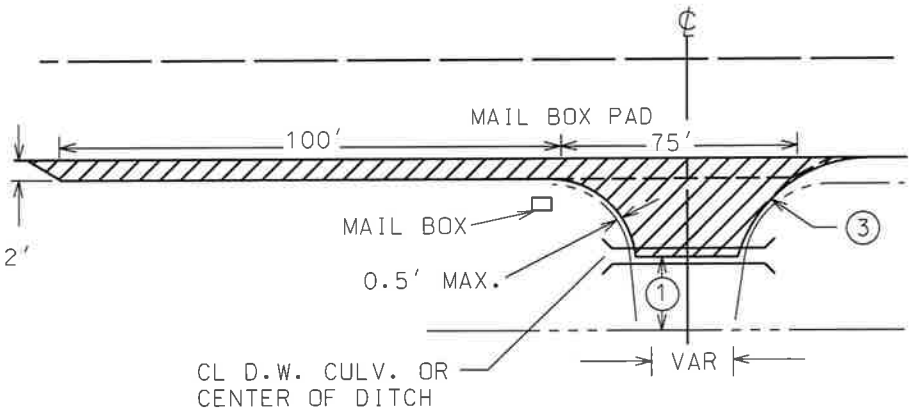

MINIMUM DEPTH 1.5″ OF BIT

(1) FINISH WITH AGGR. MATERIAL FROM EDGE OF BITUM. TO A MIN. OF 10′ BEHIND BITUM.

(2) FINISH WITH AGGR. MATERIAL, MIN. OF 10′.

(3) BITUM. RADIUS TO BE STAKED IN FIELD BY THE ENGINEER - 25′ MIN. (FOR FARM D.W. CONSIDER 30′ TO 40′ MAX.)

CONTRACTOR WILL BE REQUIRED TO SHAPE & NOTCH ALL DRIVEWAYS, INTERSECTIONS & MAIL BOX PADS THAT ARE NOT ALREADY PAVED AS DIRECTED BY THE ENGINEER. WORK SHALL BE DONE INCIDENTAL TO THE WEAR.

CONTRACTOR WILL BE REQUIRED TO HAND FINISH SHOULDERS ON ALL APPROACHES AND ENTRANCES AS DIRECTED BY THE ENGINEER.

ANY ADDITIONAL WORK ASSOCIATED WITH BRIDGE WINGWALL AND SKID LOADER MILLING FOR HEADERS ON INTERSECTING ROADS WILL BE CONSIDERED INCIDENTAL TO PLACEMENT OF THE THE BITUMINOUS PAVEMENT.

CERT. BY Ryan Thilges PROFESSIONAL ENGINEER LIC. No. 45887 JULY 12, 2016 CO. PROJ. No. 8146 SHEET No. 8 OF 8 SHEETS