MINNESOTA DEPARTMENT OF TRANSPORTATION
BLUE EARTH COUNTY DEPARTMENT OF PUBLIC WORKS
CONSTRUCTION PLANS FOR BRIDGE, GRADING & SURFACE

BRIDGE No 07J17
SAP 07-599-50

ON McPHERSON TWP RD T-136 (602 AV). 2 MILES SOUTH OF CSAH 15
ABOUT 3 MILES SOUTHWEST OF ST CLAIR OVER DRAINAGE DITCH #88.
500' E. & 200' S. OF THE WEST 1/4 COR. OF SEC 19-107-25

GROSS LENGTH	100.00	FEET	0.019	MILES
BRIDGE-LENGTH		FEET		MILES
NET LENGTH	100.00	FEET	0.019	MILES

PROPOSED BRIDGE No. 07J17
EXISTING BRIDGE No. L6995

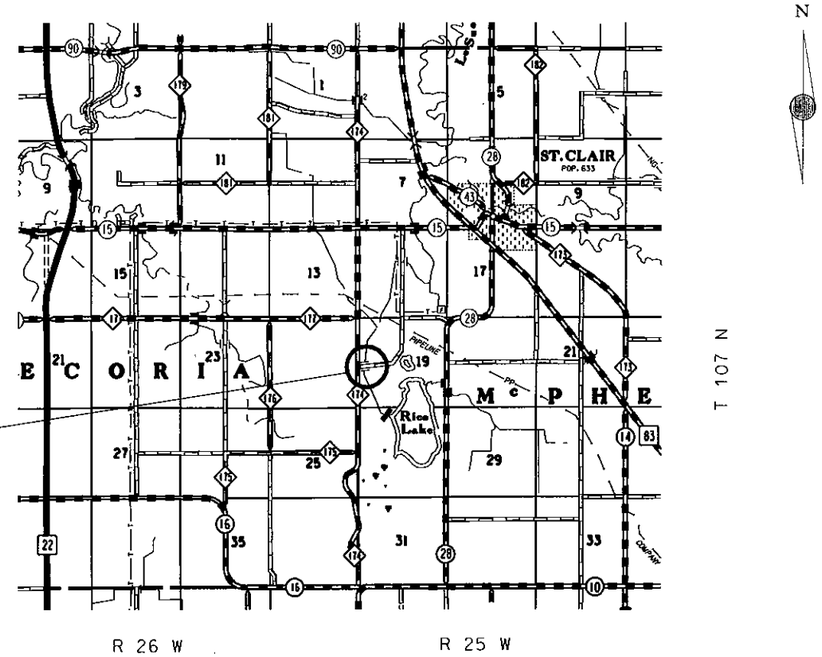

PROJECT LOCATION

BLUE EARTH COUNTY

DESIGN DESIGNATION

ADT (CURRENT YEAR) 2008 = < 30
ADT (FUTURE YEAR) 2028 = < 50
T (HEAVY COMMERCIAL)
5 TON DESIGN
R VALUE
SIGMA N 18
SOIL FACTOR 130

DESIGN SPEED MPH 30
BASED ON STOPPING SIGHT DISTANCE
HEIGHT OF EYE 3.5' - HEIGHT OF OBJECT 2.0'
DESIGN SPEED NOT ACHIEVED AT :

PLAN REVISIONS		
DATE	SHEET NO.	APPROVED BY

FOR PLANS AND UTILITIES SYMBOLS SEE TECHNICAL MANUAL

GOVERNING SPECIFICATIONS

THE 2005 EDITION OF THE MINNESOTA DEPARTMENT OF TRANSPORTATION "STANDARD SPECIFICATIONS FOR CONSTRUCTION" SHALL GOVERN.

INDEX OF SHEETS

SHEET No 1 TITLE
SHEET No 2 EST. QUANTITIES & TYPICAL SECTIONS
SHEET No 3 EROSION CONTROL QUANTITES
SHEET No 4 PLAN PROFILE
SHEET No 5 X-SECTIONS
SHEET No'S B-1 - B-3 CULVERT PLAN SHEETS

THIS PLAN CONTAINS 8 SHEETS

SCALE

PLAN	100'	
PROFILE	100' HORIZ.	10' VERT.
INDEX MAP	1 MILE	
CROSS SECTIONS	10' HORIZ.	10' VERT.

THE SUBSURFACE UTILITY INFORMATION IN THIS PLAN IS UTILITY LEVEL D. THIS QUALITY LEVEL WAS DETERMINED ACCORDING TO THE GUIDELINES OF CI/ASCE 38-02, ENTITLED "STANDARD GUIDELINES FOR THE COLLECTION AND DEPICTION OF EXISTING SUBSURFACE UTILITY DATA."

UTILITIES

ONE CALL:	1-800-252-1166
ELECTRIC: BENCO	1-507-387-7963
TELEPHONE: HICKORY TECH	1-507-387-1730

ALL APPLICABLE FEDERAL, STATE AND LOCAL LAWS AND ORDINANCES WILL BE COMPLIED WITH , IN THE CONSTRUCTION OF THIS PROJECT.

I HEREBY CERTIFY THAT THIS PLAN, SPECIFICATION, OR REPORT WAS PREPARED BY ME OR UNDER MY DIRECT SUPERVISION AND THAT I AM DULY LICENSED PROFESSIONAL ENGINEER UNDER THE LAWS OF THE STATE OF MINNESOTA

Alan Forsberg — COUNTY ENGINEER — ALAN FORSBERG

DATE 14 Oct 08 — LICENSE No. 14720

D E Haeder — DATE: 12/5/08
DIST. STATE AID ENG'R : REVIEWED FOR COMPLIANCE WITH STATE-AID RULES/POLICY

~~STATE BRIDGE ENGINEER~~ — DATE:

D E Haeder — DATE: 12/5/08
STATE AID ENG'R : APPROVED FOR STATE-AID FUNDING

McPHERSON TWP SAP. 07-599-50 SHEET No. 1 OF 5 SHEETS

.../TWP/McPherson/07J17/TITLE.dgn 9/30/2008 9:27:42 AM

THE FOLLOWING STANDARD PLATES, APPROVED BY THE FEDERAL HIGHWAY ADMINISTRATION, SHALL APPLY ON THIS PROJECT.

STANDARD PLATES

PLATE NO.	DESCRIPTION
3014 J	REINFORCED CONCRETE PIPE ARCH
3114 H	SECTIONAL CONCRETE APRON FOR REINFORCED CONCRETE PIPE-ARCH
3145 F	CONCRETE PIPE TIES (EYE BOLT TIE)
8000 I	STANDARD BARRICADES

STATEMENT OF ESTIMATED QUANTITIES

PAGE	ITEM No.	ITEM	UNIT	TOTAL EST. QUANTITY	TOTAL FINAL QUANTITY
4	2104.501	REMOVE PIPE CULVERT	LIN. FT.	30	
4	2104.501	REMOVE STRUCTURAL PLATE ARCH PIPE	LIN. FT.	58	
2	2118.501	AGGREGATE SURFACING CL-1 (M)	TON	65	
3	2573.502	SILT FENCE TYPE HEAVY DUTY	LIN. FT.	100	
3	2573.540	FILTER LOG, TYPE STRAW BIOROLL	LIN. FT.	100	
	2573.550	EROSION CONTROL SUPERVISOR	L.S.	1	
3	2575.555	TURF ESTABLISHMENT	L.S.	1	

TYPICAL GRADING SECTIONS

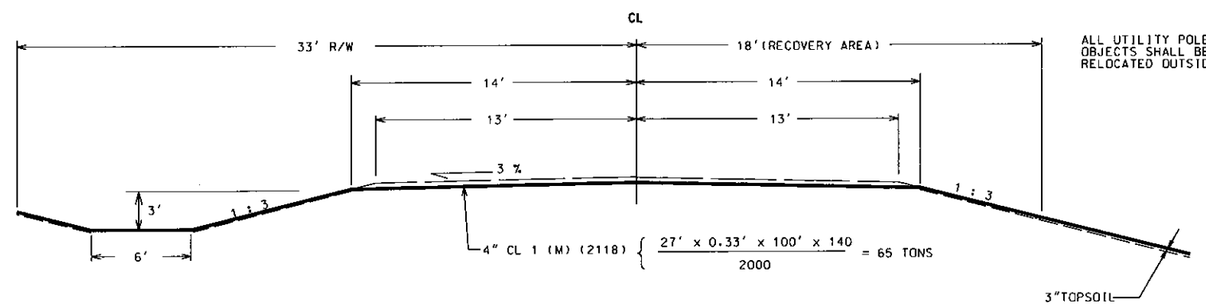

ALL UTILITY POLES & OTHER UNYIELDING OBJECTS SHALL BE REMOVED AND RELOCATED OUTSIDE RECOVERY AREA.

3" OF TOPSOIL WILL BE REQUIRED ON ALL DISTURBED AREAS. QUANTITIES WILL BE INCIDENTAL TO BACKFILL

EXISTING SECTIONS

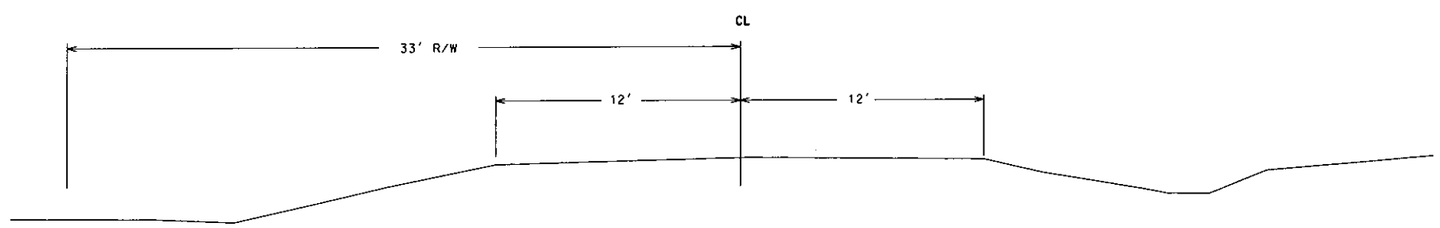

CERTIFIED BY Alan Forsberg PROFESSIONAL ENGINEER LIC. NO. 14720 OCT. 1, 2008

MCPHERSON TWP SAP 07-599-50 SHEET 2 OF 5 SHEETS

SYMBOLS CODE

SILT BARRIERS

TURF ESTABLISHMENT LUMP SUM
ESTIMATED 0.15 ACRES

RIPRAP CL III 18" DEEP

1. LOCATIONS ON THIS SHEET ARE TO BE USED AS A GUIDE
   VERIFY QUANTITIES AND LOCATIONS WITH CONDITIONS IN THE FIELD

2. BASIS OF PAYMENT SPECIFIED IN SPEC. 1903 SHALL BE MODIFIED TO PRECLUDE ANY
   PRICE ADJUSTMENT FOR INCREASED OR DECREASED QUANTITIES

3. CHOOSE TYPE OF SILT BARRIERS TO BEST FIT FIELD CONDITIONS
   ESTIMATED AT
   TYPE SILT FENCE HEAVY DUTY 100'
   TYPE FILTER LOG TYPE STRAW BIOROLL 100'

4. RIPRAP CL 3 PLACED 18" DEEP, 6" OF GRANULAR FILTER SHALL BE
   INCIDENTAL TO PLACING RIPRAP. (GEOTEXTILE FABRIC MAY NOT BE SUBSTITUTED)

SUMMARY OF IMPERVIOUS & PERVIOUS
(NPDES PERMIT)

	Disturbed area	Before Construction (Impervious)	Before Construction Pervious	After Construction (Impervious)	After Construction Pervious
total sq ft.	11,210	2,400	8,810	2,800	8,410
Acres	**0.26**	**0.06**	**0.20**	**0.06**	**0.20**

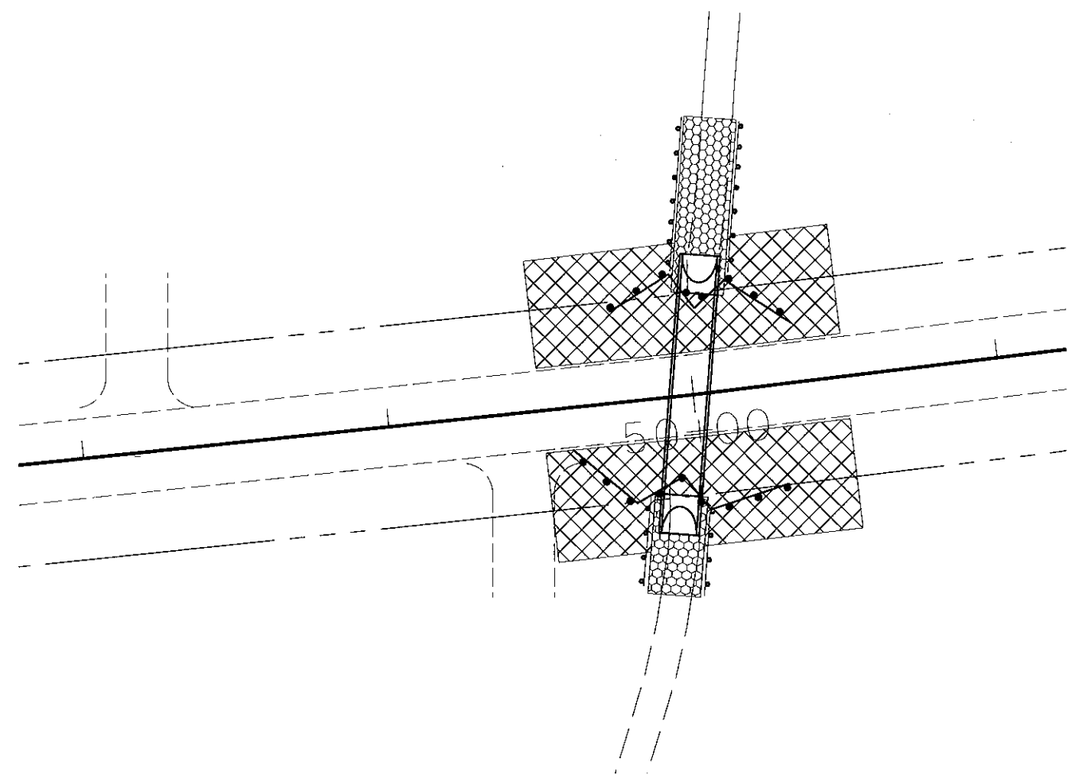

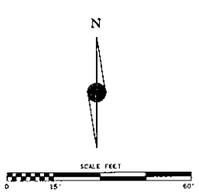

EROSION CONTROL
& TURF EST. PLAN

CERTIFIED BY Alan Forsberg PROFESSIONAL ENGINEER LIC. NO. 14720 OCT. 2, 2008

McPHERSON TWP. SAP 07-599-50 SHEET 3 OF 5 SHEETS

P:/TWP/McPherson/07J17/turf.dgn 9/29/2008 2:38:32 PM

ALL UNDERGROUND UTILITIES
LOCATIONS ARE APPROXIMATE

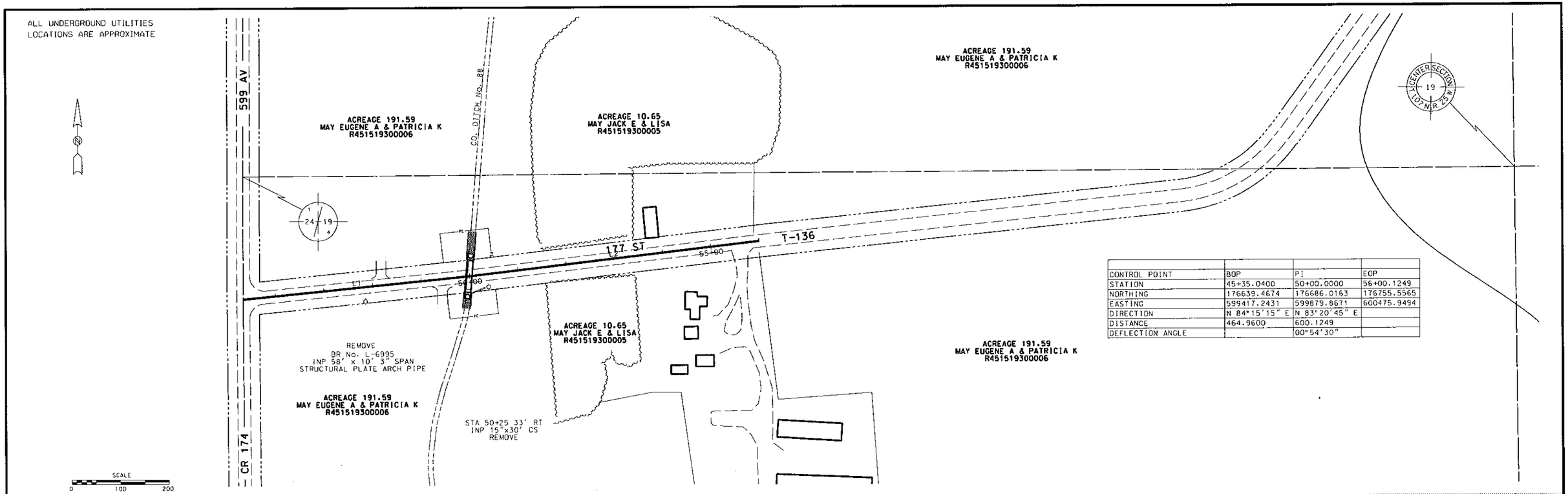

CONTROL POINT	BOP	PI	EOP
STATION	45+35.0400	50+00.0000	56+00.1249
NORTHING	176639.4674	176686.0163	176755.5565
EASTING	599417.2431	599879.8671	600475.9494
DIRECTION	N 84°15'15" E	N 83°20'45" E	
DISTANCE	464.9600	600.1249	
DEFLECTION ANGLE		00°54'30"	

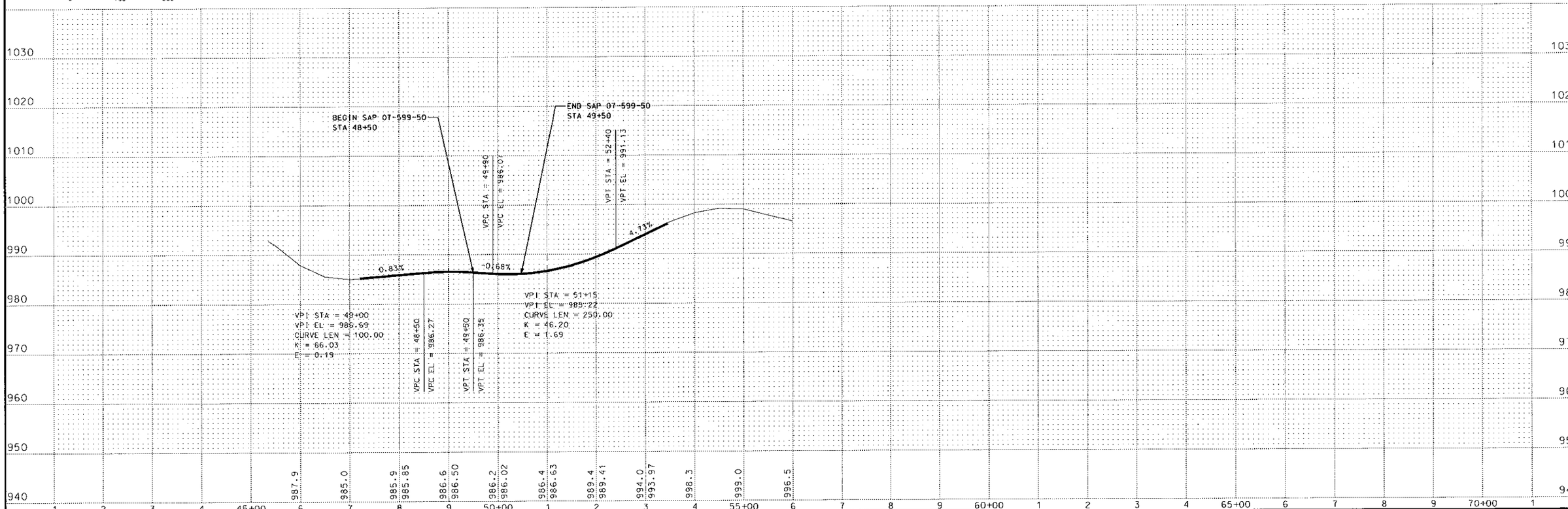

CERTIFIED BY Alan Forsberg PROFESSIONAL ENGINEER LIC. NO. 14720 OCT.30, 2008

McPHERSON TWP SAP. 07-599-50 SHEET 4 OF 5 SHEETS

.../McPherson/07J17/PP_1003.dgn 10/30/2008 2:42:26 PM

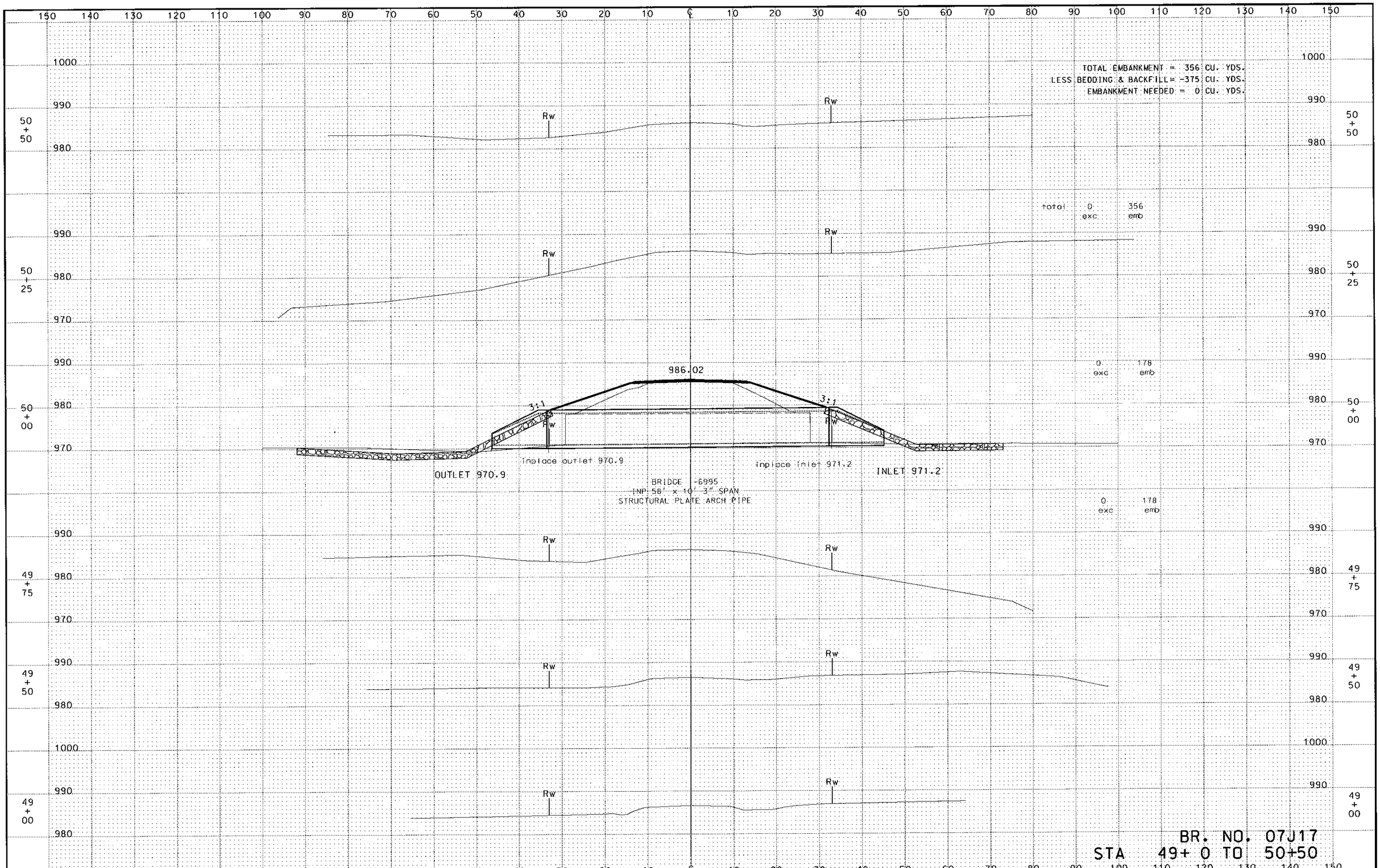

McPHERSON TWP SAP. 07-599-50 SHEET 5 OF 5 SHEETS

.../McPherson/07J17/X_SEC_1003.dgn 9/29/2008 2:46:11 PM

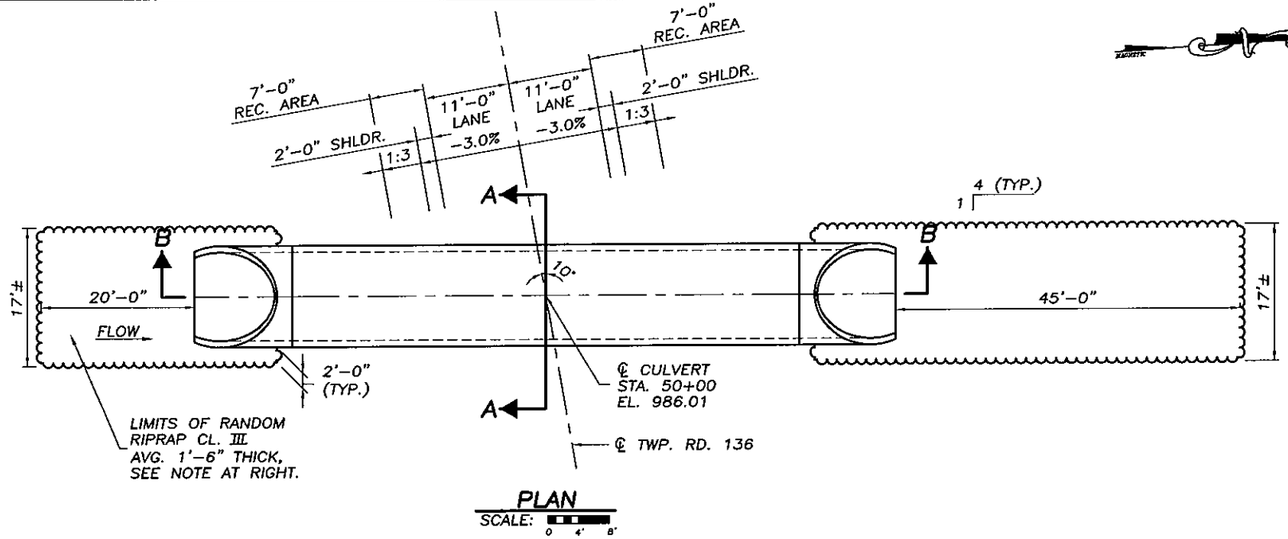

PLAN

SCALE: 0 4' 8'

BENCHMARK ELEV. 988.51

LOCATION: SPIKE IN POWER POLE
STA. 47+82 (29' RIGHT)

LIST OF STANDARD PLATES

PLATE NO.	DESCRIPTION
3014 J	REINFORCED CONCRETE PIPE ARCH
3114 H	SECTIONAL CONCRETE APRON FOR R.C.P.A.
3133 C	RIPRAP AT R.C.P. OUTLETS
3145 F	CONCRETE PIPE TIES
8000 I	STANDARD BARRICADES

THE ABOVE STANDARD PLATES, AS APPROVED BY THE F.H.W.A., SHALL APPLY ON THIS PROJECT.

GOVERNING SPECIFICATIONS

THE 2005 EDITION OF THE MINNESOTA DEPARTMENT OF TRANSPORTATION "STANDARD SPECIFICATIONS FOR CONSTRUCTION" SHALL GOVERN.

CONSTRUCTION NOTES

RIPRAP CONSTRUCTION AT OUTLET SHALL BE AS SHOWN IN THE PLANS AND STANDARD PLATE 3133. RIPRAP CONSTRUCTION AT INLET SHALL BE AS SHOWN IN THE PLANS. EXACT PLACEMENT SHALL BE DETERMINED BY THE ENGINEER IN THE FIELD.

CLEARING AND GRUBBING ARE CONSIDERED INCIDENTAL TO BRIDGE REMOVAL FOR WHICH NO DIRECT COMPENSATION WILL BE MADE.

EXCAVATION MATERIAL MAY BE USED FOR BACKFILLING APRONS IF APPROVED BY ENGINEER IN THE FIELD.

GRANULAR FILTER MATERIAL WILL BE CONSIDERED INCIDENTAL TO RIPRAP CONSTRUCTION FOR WHICH NO DIRECT COMPENSATION WILL BE MADE. APPROXIMATE QUANTITY OF GRANULAR FILTER IS 34 C.Y.

THE SURVEY USED IN DEVELOPING THIS CULVERT PLAN MUST BE VERIFIED WITH THE ACTUAL STREAM LOCATION AT THE TIME OF CONSTRUCTION STAKING. IF THE CULVERT POSITION IS NOT COMPATIBLE WITH THE STREAM, THE ENGINEER SIGNING THESE PLANS SHALL BE NOTIFIED.

THE SUBSURFACE UTILITY INFORMATION IN THIS PLAN IS UTILITY QUALITY LEVEL D. THIS UTILITY QUALITY LEVEL WAS DETERMINED ACCORDING TO THE GUIDELINES OF CI/ASCE 38-02, ENTITLED "STANDARD GUIDELINES FOR THE COLLECTION AND DEPICTION OF EXISTING SUBSURFACE UTILITY DATA."

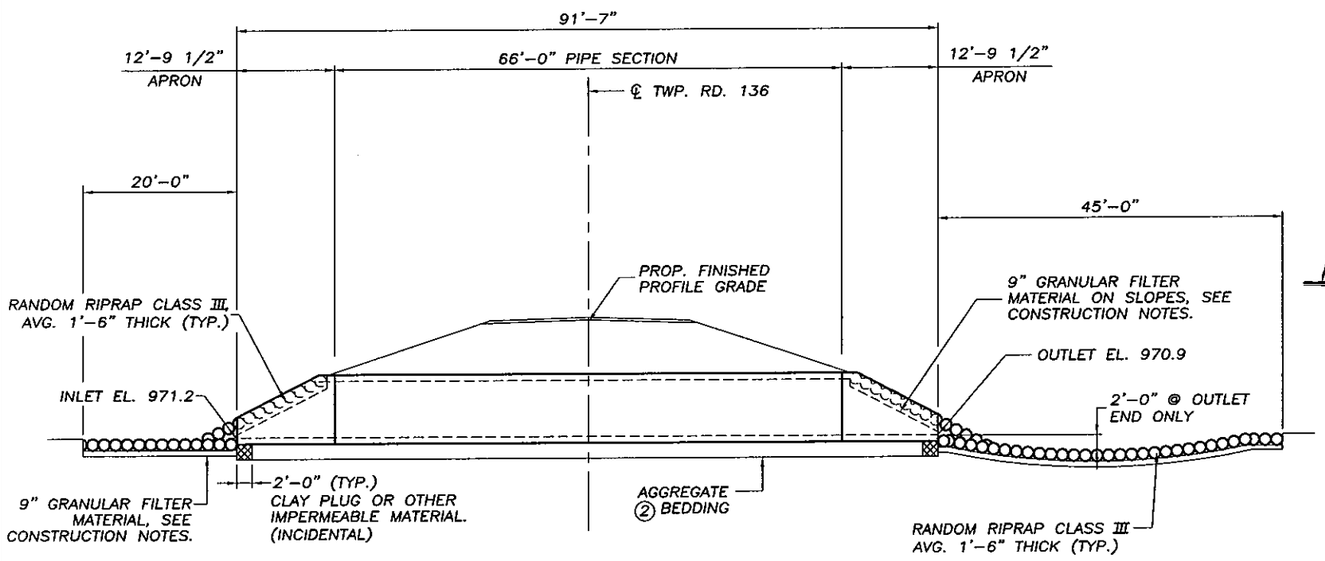

ELEVATION SECTION B-B

SCALE: 0 4' 8'

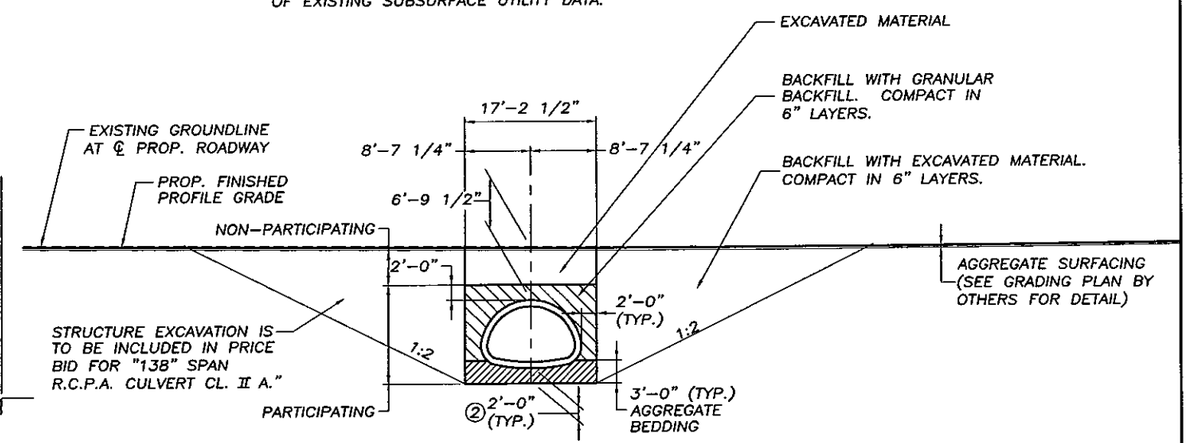

SECTION THRU CULVERT SECTION A-A

SCALE: 0 4' 8'

STATEMENT OF ESTIMATED QUANTITIES

	ITEM NO.	ITEM	UNIT	PARTICIPATING	TOTAL
	2021.501	MOBILIZATION	LUMP SUM	1	1
	2451.503	GRANULAR BACKFILL (CV)	CU. YD.	235	235
②	2451.509	AGGREGATE BEDDING (CV)	CU. YD.	140	140
③	2501.521	138" SPAN R.C.P.A. CULVERT CL. II A	LIN. FT.	66	66
③	2501.525	138" SPAN R.C.P.A. APRON	EACH	2	2
①	2511.501	RANDOM RIPRAP, CLASS III	CU. YD.	67	67

① SEE CONSTRUCTION NOTES.

② EXCAVATE TO 2' BELOW BOTTOM OF CULVERT OR BOTTOM OF UNSUITABLE SOIL, WHICHEVER IS GREATER. BACKFILL WITH AGGREGATE BEDDING.

③ STRUCTURE EXCAVATION SHALL BE INCLUDED IN PRICE BID FOR "138" SPAN R.C.P.A. CULVERT CL. II A."

PLANS PREPARED BY:
ERICKSON ENGINEERING
9330 JAMES AVE. S.
BLOOMINGTON, MN 55431

I HEREBY CERTIFY THAT THIS PLAN (SHEETS B1-B3) WAS PREPARED BY ME OR UNDER MY DIRECT SUPERVISION AND THAT I AM A DULY LICENSED PROFESSIONAL ENGINEER UNDER THE LAWS OF THE STATE OF MINNESOTA.

Chad Darnell CHAD DARNELL

DATE: 10/7/08 LIC. NO. 45944

APPROVED:

COUNTY ENGINEER
BLUE EARTH COUNTY

DATE: 17 Nov 08

TWP. RD. 136 BLUE EARTH COUNTY
MINNESOTA DEPARTMENT OF TRANSPORTATION

CULVERT NO. 07J17

LOCATED 0.1 MILES EAST OF JCT. C.R. 174 ON TOWNSHIP ROAD 136 OVER COUNTY DITCH NO. 88

1 - 138"x88" R.C.P.A. CULVERT
28 FT. ROADWAY ~ 10° SKEW
SPAN IDENTIFICATION NO. 115

GENERAL PLAN & ELEVATION

SEC. 19 TWP. 107 N R 25 W

TOWNSHIP: MC PHERSON
COUNTY: BLUE EARTH

S.A.P. 07-599-50

SHEET B1 OF B3 SHEETS

DES.:	CGD	DRN.:	SUK	07J17
CHK.:	TJW	CHK.:	CGD	

CONTRACTED PROFILE

SCALE: HOR. 0' 50' 100' VER. 0' 5' 10'

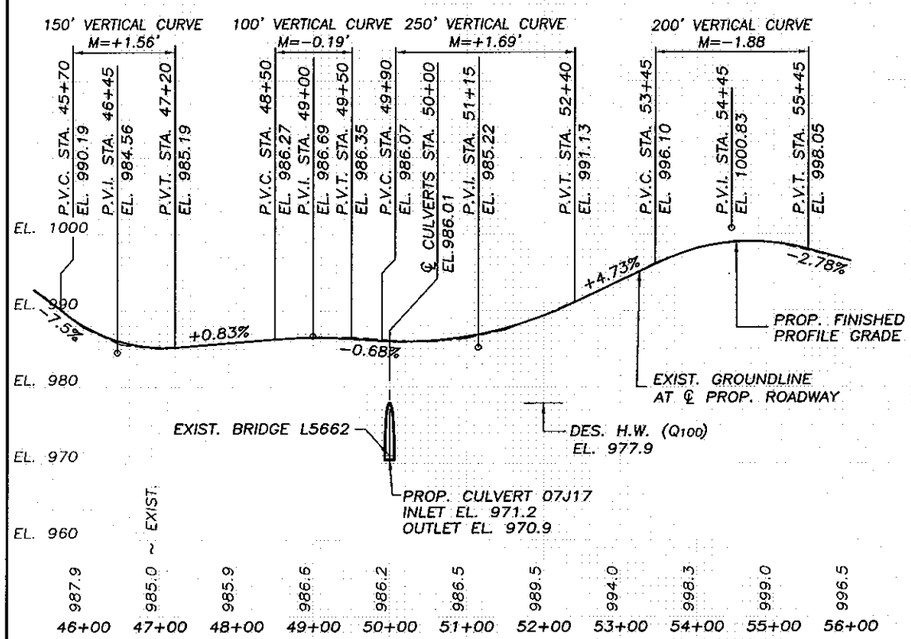

PLAT

SCALE: 0' 50' 100'

UTILITY INFORMATION

WARNING:
DIAL GOPHER STATE ONE CALL AT 1−800−252−1166 48 HOURS IN ADVANCE OF CONSTRUCTION OPERATIONS TO OBTAIN COMPLETE UTILITY PROPERTY OWNERSHIP AND LOCATION INFORMATION.

UTILITY INFO AVAILABLE FOR PLAN PREPARATION:
BENCO ELECTRIC (UNVERIFIED) (507) 387−7963
HICKORY TECH. (507) 386−3553

NOTE:
FIELD VERIFY ALL UTILITIES

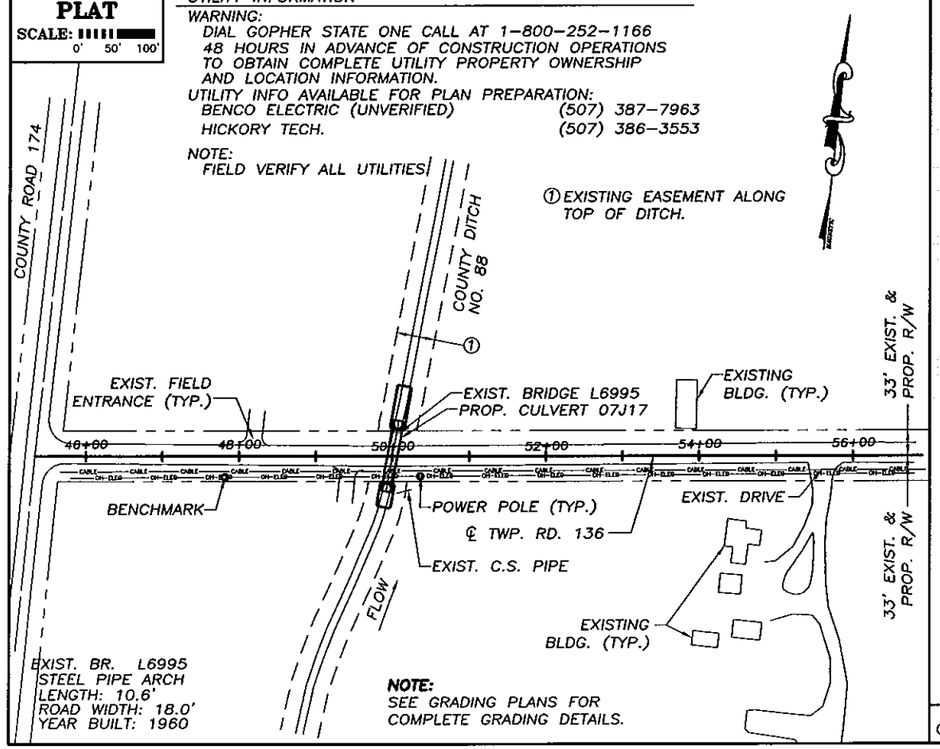

TYPICAL SECTIONS & PERTINENT DATA

SCALES AS SHOWN

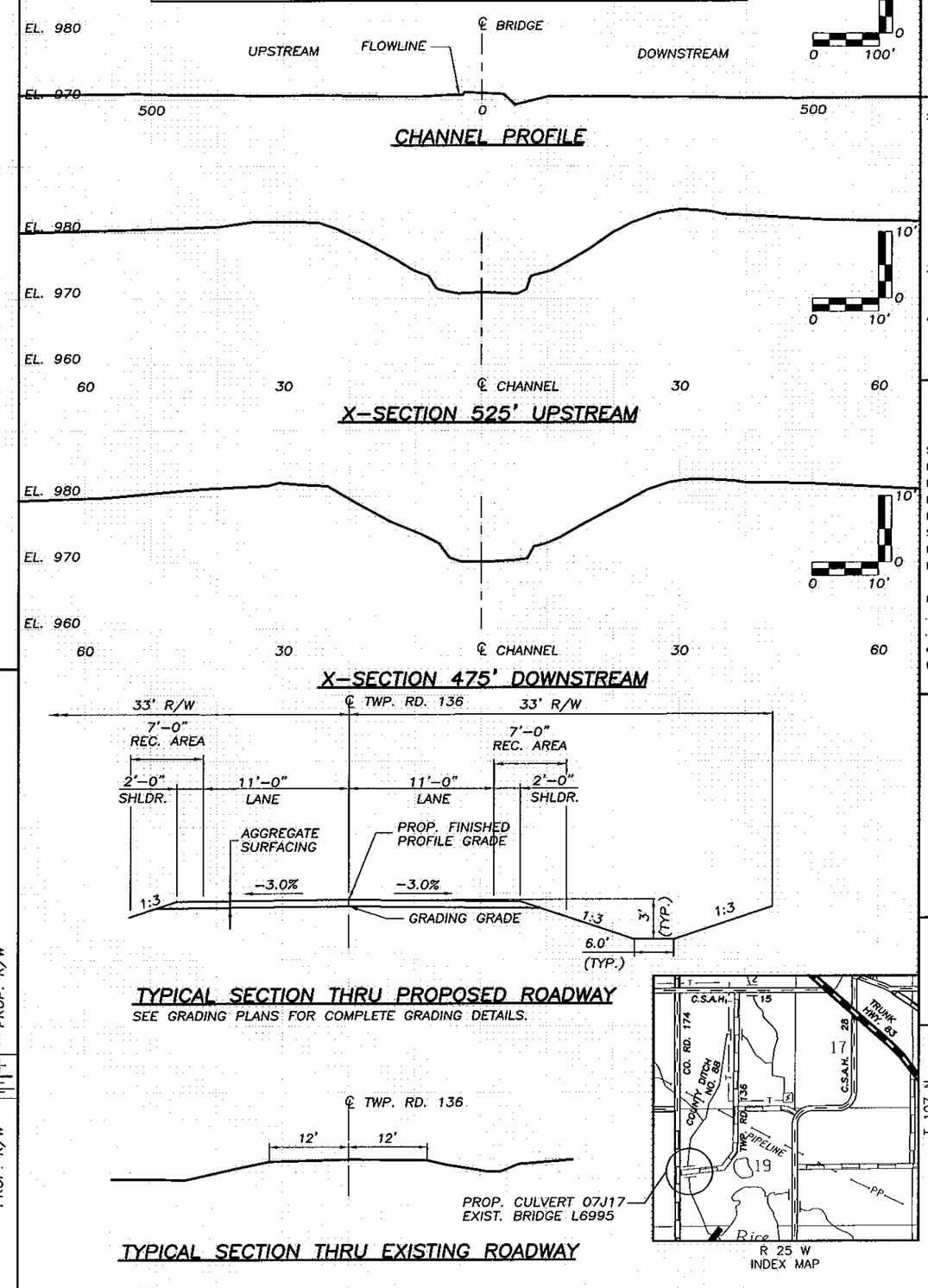

Fed. Proj. No.

LOCATION ENGINEER'S OBSERVATION AT BRIDGE SITE

DATE .....

1. Special Features: Waterfalls, dams, floods, ice, debris, sliding banks, rec. boats.
.....
.....

2. Other bridges or culverts over the same stream (particularly structures which carry high water without overflow of roadway) :Given location, type, length, height above high water, cross−sectional area, etc.
.....
.....
.....
.....
.....
.....
.....

3. Apparent highwater elevation..... Obtained from.....
.....
.....

4. Other data: Approx. velocity of water at time of survey .....
.....
.....

HYDRAULIC ENGINEER'S RECOMMENDATION

DATE 01−08−08

Stream or ditch designation COUNTY DITCH NO. 88
Drainage area 10.4 SQ. MI.
Max. flood on record UNKN. Design flood (100 yr. freq.) 370 C.F.S.
Max. observed highwater elev. UNKN Design highwater elev. 977.9
Design mean velocity through structure 5.7 F.P.S.
Skew angle 10°
Flowline Inlet elevation 971.2 Flowline Outlet elevation 970.9
Barrel Inlet elevation 971.2 Barrel Outlet elevation 970.9

In the interest of flood plain zoning the regional flood (100 yr. freq.) is 370 C.F.S. at stage 977.9 and mean velocity of 5.7 F.P.S. with 0.6 Ft. swellhead. The above recommendation will provide a structure of adequate waterway to pass the regional flood within criteria established by the Dept. of Natural Resources.

ENGINEER'S RECOMMENDATION

DATE 01−08−08

1 − 138"x88" R.C.P.A. CULVERT
10° SKEW, 28 FT. ROADWAY WIDTH

Bridge survey sheets made from: SURVEY NOTES FROM BLUE EARTH COUNTY

Benchmark elevation 988.51
Location: SPIKE IN POWER POLE STA. 47+82 (29' RIGHT)

STATE OF MINNESOTA
DEPARTMENT OF TRANSPORTATION

CULVERT SURVEY

AT MILE POINT ..... ON TWP. RD. 136
PROPOSED BRIDGE LOCATED 0.1 MILES EAST OF J.C.T. COUNTY RD. 174 OVER COUNTY DITCH NO. 88
SEC. 19 TWP. 107 N R. 25 W
TOWNSHIP MC PHERSON COUNTY BLUE EARTH
EXIST. BRIDGE NO. L6995
PROP. BRIDGE NO. 07J17

CERTIFIED BY Chad Danell LIC. NO. 45944 DATE: 10/7/08

State Aid Proj. No. 07−599−50

Sheet No. B2 of B3 Sheets

Fed. Proj. No.

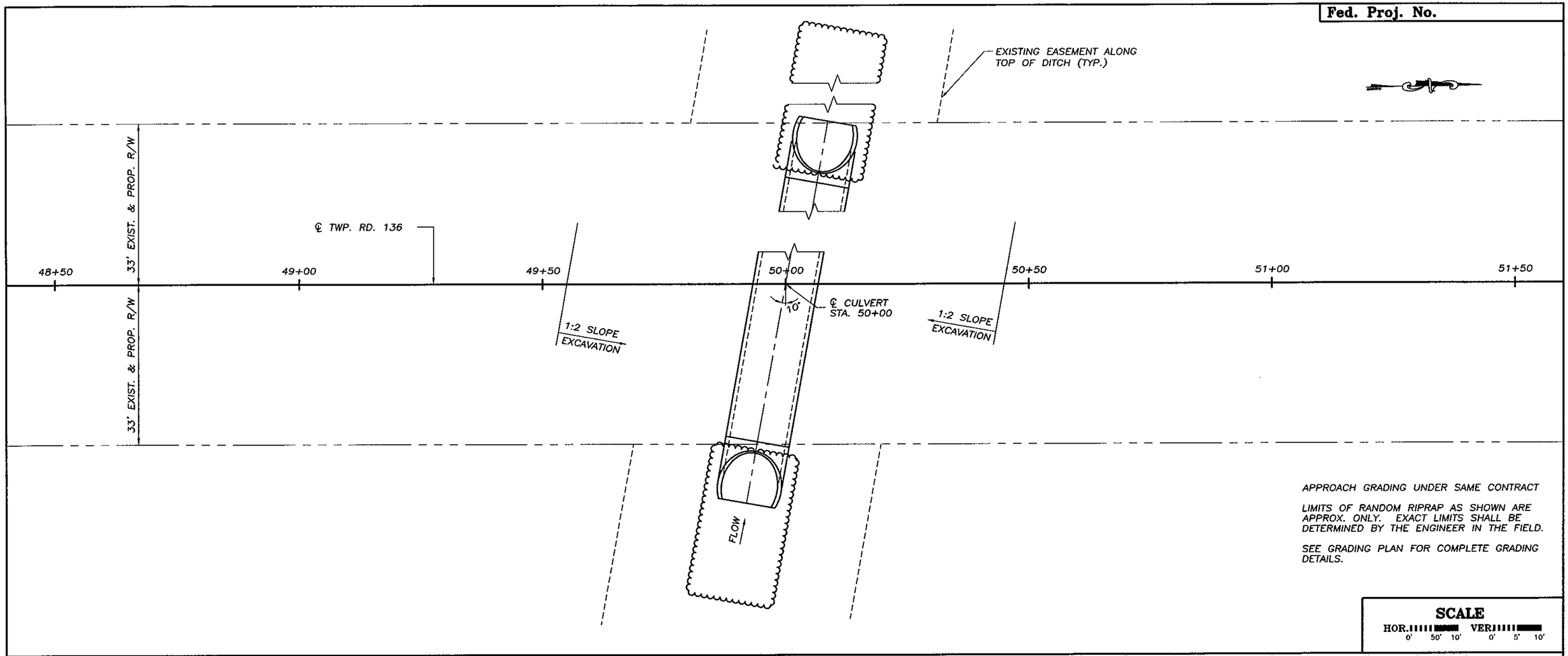

APPROACH GRADING UNDER SAME CONTRACT

LIMITS OF RANDOM RIPRAP AS SHOWN ARE APPROX. ONLY. EXACT LIMITS SHALL BE DETERMINED BY THE ENGINEER IN THE FIELD.

SEE GRADING PLAN FOR COMPLETE GRADING DETAILS.

SCALE
HOR. 0' 50' 10' VER. 0' 5' 10'

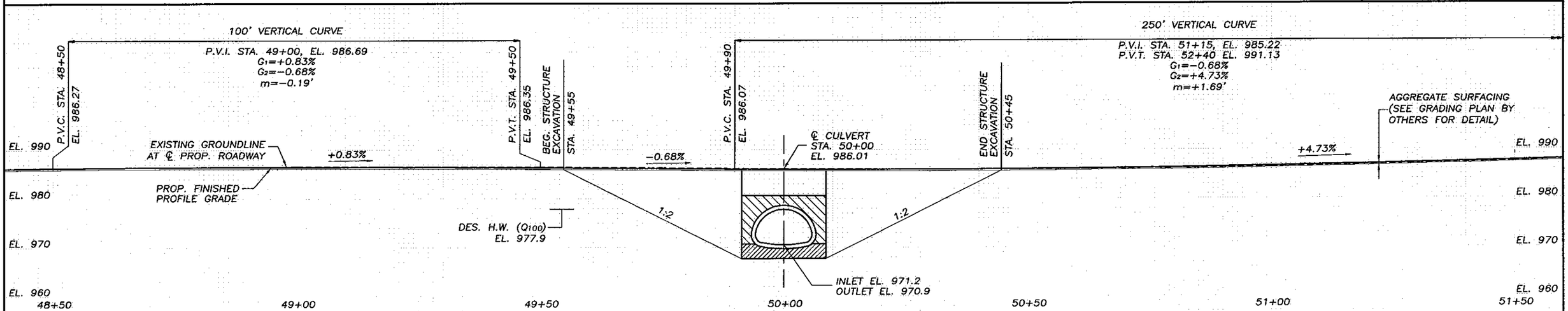

CERTIFIED BY Chad Darnell
PROFESSIONAL ENGINEER/CHAD DARNELL
LIC. NO. 45944 10/7/08 2008

CULVERT SURVEY PLAN & PROFILE

State Aid Proj. No. 07-599-50

DES.: CGD	DRN.: SUK	APPROVED:
CHK.: TJW	CHK.: CGD	

Sheet No. B3 of B3 Sheets

Culvert No. 07J17