MINNESOTA DEPARTMENT OF TRANSPORTATION
BLUE EARTH COUNTY DEPARTMENT OF PUBLIC WORKS
CONSTRUCTION PLANS FOR BRIDGE, GRADING AND SURFACE FOR BRIDGE 07557 STATE 07-598-26

ON COUNTY ROAD 152 0.5 MILES SOUTH OF T.H. 30
ABOUT 6.5 MILES WEST OF MAPLETON OVER THE MAPLE RIVER
FROM 155' N. OF THE S.E. COR. OF THE S.W. 1/4 OF THE N.W. 1/4
OF SEC. 14-105-27 TO THE N. 1/4 COR. OF SEC. 14-105-27

GROSS LENGTH	2900.00	FEET	0.549	MILES
BRIDGE-LENGTH	86.86	FEET	0.016	MILES
NET LENGTH	2900.00	FEET	0.549	MILES

END SAP 07-598-26
STA 78+00

PROPOSED BRIDGE No. 07557
EXISTING BRIDGE No. 90556

BEGIN SAP 07-598-26
STA 49+00

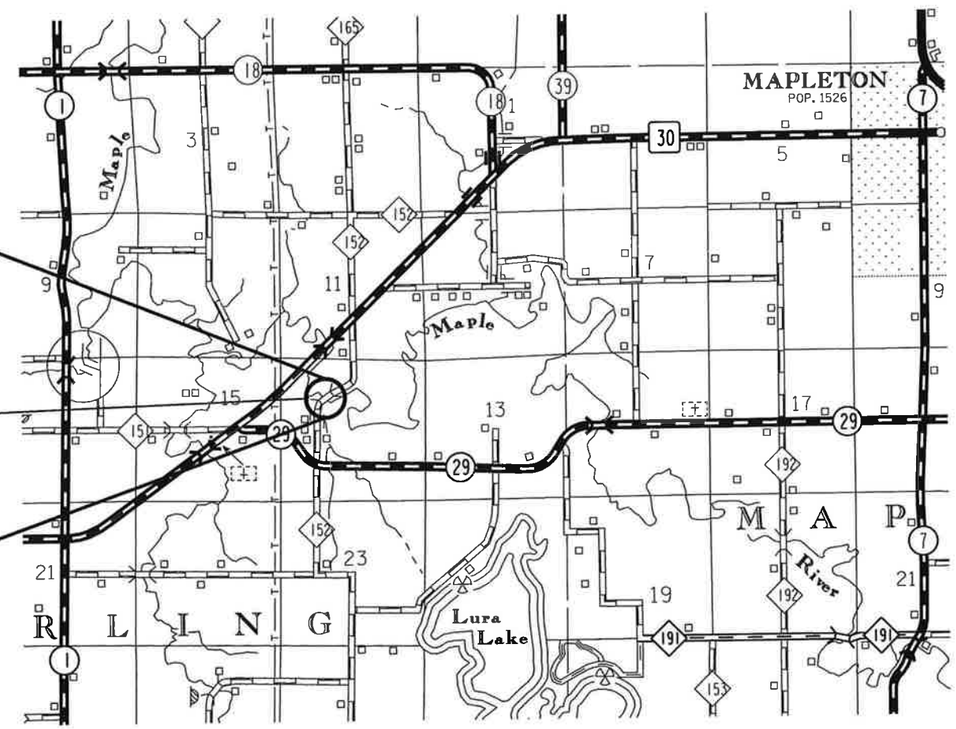

PROJECT LOCATION

BLUE EARTH COUNTY

DESIGN DESIGNATION

ADT (CURRENT YEAR) 2009 = 55
ADT (FUTURE YEAR) 2029 =
T (HEAVY COMMERCIAL)
5 TON DESIGN
R VALUE
SIGMA N 18
SOIL FACTOR 130

DESIGN SPEED MPH 40
BASED ON STOPPING SIGHT DISTANCE
HEIGHT OF EYE 3.5' - HEIGHT OF OBJECT 2.0'
DESIGN SPEED NOT ACHIEVED AT :
STA. TO STA. MPH
STA. TO STA. MPH

PLAN REVISIONS		
DATE	SHEET NO.	APPROVED BY

FOR PLANS AND UTILITIES SYMBOLS SEE TECHNICAL MANUAL

GOVERNING SPECIFICATIONS

THE 2005 EDITION OF THE MINNESOTA DEPARTMENT OF TRANSPORTATION "STANDARD SPECIFICATIONS FOR CONSTRUCTION" SHALL GOVERN.

INDEX OF SHEETS

SHEET No'S	1	TITLE
SHEET No'S	2	EST. QUANTITIES
SHEET No'S	3	TYPICAL SECTIONS
SHEET No'S	4	QUANTITES
SHEET No'S	5	ALIGNMENT & UTILITIES
SHEET No'S	6	EROSION CONTROL QUANTITIES
SHEET No'S	7-10	EROSION CONTROL DETAILS
SHEET No'S	11	PLAN PROFILE
SHEET No'S	12-18	X-SECTIONS
SHEET No'S	B1-B21	BRIDGE PLAN

THIS PLAN CONTAINS 39 SHEETS

SCALE

PLAN	100'	
PROFILE	100' HORIZ.	10' VERT.
INDEX MAP	1 MILE	
CROSS SECTIONS	10' HORIZ.	10' VERT.

THE SUBSURFACE UTILITY INFORMATION IN THIS PLAN IS UTILITY LEVEL D. THIS QUALITY LEVEL WAS DETERMINED ACCORDING TO THE GUIDELINES OF CI/ASCE 38-02, ENTITLED "STANDARD GUIDELINES FOR THE COLLECTION AND DEPICTION OF EXISTING SUBSURFACE UTILITY DATA."

UTILITIES

ONE CALL:	1-800-252-1166
ELECTRIC: BENCO	1-507-387-7963
TELEPHONE: HICKORY TECH	1-507-387-1730

ALL APPLICABLE FEDERAL, STATE AND LOCAL LAWS AND ORDINANCES WILL BE COMPLIED WITH , IN THE CONSTRUCTION OF THIS PROJECT.

I HEREBY CERTIFY THAT THIS PLAN, SPECIFICATION, OR REPORT WAS PREPARED BY ME OR UNDER MY DIRECT SUPERVISION AND THAT I AM DULY LICENSED PROFESSIONAL ENGINEER UNDER THE LAWS OF THE STATE OF MINNESOTA

COUNTY ENGINEER — ALAN FORSBERG

DATE 22 Mar 10 — LICENSE No. 14720

DIST. STATE AID ENG'R : REVIEWED FOR COMPLIANCE WITH STATE-AID RULES/POLICY — DATE: 3/31/10

STATE BRIDGE ENGINEER — DATE: 4/6/10

for STATE AID ENG'R : APPROVED FOR STATE-AID FUNDING — DATE: 4/19/10

SAP 07-598-26 CR 152 SHEET No. 1 OF 18 SHEETS

TITLE.dgn 3/17/2010 2:56:12 PM

THE FOLLOWING STANDARD PLATES, APPROVED BY THE FEDERAL HIGHWAY ADMINISTRATION, SHALL APPLY ON THIS PROJECT.

STANDARD PLATES

PLATE NO.	DESCRIPTION
3000 L	REINFORCED CONCRETE PIPE
3040 F	CORRUGATED METAL PIPE CULVERT
3100 G	CONCRETE APRON FOR REINFORCED CONCRETE PIPE
3123 J	METAL APRON FOR C.S. PIPE
3124 B	METAL APRON CONNECTION
3133 C	RIPRAP AT RCP OUTLETS
3145 F	CONCRETE PIPE TIES (EYE BOLT TIE)
3221 C	CORRUGATED STEEL PIPE COUPLING BAND
8000 I	STANDARD BARRICADES

STATEMENT OF ESTIMATED QUANTITIES

PAGE	ITEM No.	ITEM	UNIT	TOTAL EST. QUANTITY	TOTAL FINAL QUANTITY
4	2101.502	CLEARING	TREE	192	
4	2101.507	GRUBBING	TREE	169	
4	2104.501	REMOVE PIPE CULVERT	LIN. FT.	136	
4	2104.501	REMOVE FENCE	LIN. FT.	610	
4	2104.501	REMOVE GUARD RAIL	LIN. FT.	430	
4	2104.501	REMOVE ROAD TILE	LIN. FT.	500	
4	2104.509	REMOVE BOX CULVERT	EACH	1	
4	2105.501	COMMON EXCAVATION	C. Y.	(P) 17,786	
4	2118.501	AGGREGATE SURFACING CL-1 (M)	TON	1,755	
4	2118.501	AGGREGATE SURFACING CL-2 (M)	TON	150	
4	2211.501	AGGREGATE BASE, CL-5	TON	230	
4	2357.502	BITUMINOUS MATERIAL FOR TACK COAT	GALLON	28	
4	2360.501	TYPE SP 19.0 WEARING COURSE MIXTURE (2,B)	TON	140	
	2442.501	REMOVE EXISTING BRIDGE	LUMP SUM	1	
4	2501.511	18" C.S. PIPE CULVERT	LIN. FT.	196	
4	2501.511	60" RC PIPE CULVERT CL-II	LIN. FT.	74	
4	2501.515	18" GS PIPE APRON	EACH	8	
4	2501.515	60" RC PIPE APRON	EACH	2	
6	2511.501	RANDOM RIPRAP CL-III	C. Y.	85	
6	2573.502	SILT FENCE, TYPE HEAVY DUTY	LIN. FT.	347	
6	2573.502	SILT FENCE, TYPE MACHINE SLICED	LIN. FT.	557	
6	2573.505	FLOTATION SILT CURTAIN TYPE MOVING WATER	LIN. FT.	90	
6	2573.512	TEMPORARY DITCH CHECK, TYPE 2	LIN. FT.	585	
6	2573.513	TEMPORARY DITCH CHECK, TYPE 7	C.Y.	18	
6	2573.520	SEDIMENT REMOVAL, BACKHOE	HOURS	3	
6	2573.54	FILTER LOG, TYPE STRAW BIOROLL	LIN. FT.	347	
	2573.550	EROSION CONTROL SUPERVISOR	L.S.	1	
6	2573.602	TEMPORARY SEDIMENT TRAP	EACH	3	
6	2575.501	SEEDING	ACRE	9	
6	2575.502	SEED, MIXTURE 150	LBS.	83	
6	2575.502	SEED, MIXTURE 280	LBS.	347	
6	2575.511	MULCH MATERIAL TYPE 1	TON	18	
6	2575.519	DISC ANCHORING	ACRE	9	
6	2575.523	EROSION CONTROL BLANKETS, CATEGORY 4	SQ. YD.	1,804	
6	2575.532	COMMERCIAL FERTILIZER ANA 20-10-20	LBS.	2,432	
6	2575.560	HYDROLIC SOIL STABILIZER TYPE 5	LBS.	900	

CERTIFIED BY Alan Forsberg LIC. NO. 14720 FEB. 26, 2010
ALAN FORSBERG PROFESSIONAL ENGINEER

PROPOSED BRIDGE WIDTH 28'

CR 152 GRADING

3" OF TOPSOIL WILL BE REQUIRED ON ALL DISTURBED AREAS.
QUANTITIES WILL BE INCIDENTAL TO COMMON EXC.

ALL UTILITY POLES & OTHER UNYIELDING OBJECTS SHALL BE REMOVED AND RELOCATED OUTSIDE RECOVERY AREA.

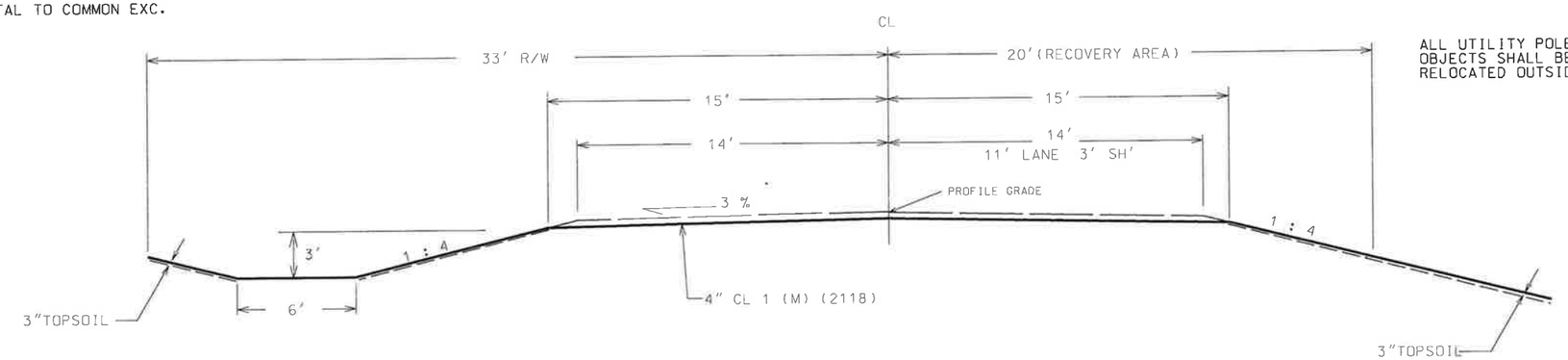

SUPER ELEVATED BITUMINOUS PAVEMENT SECTION

STA 58+45 TO 61+30

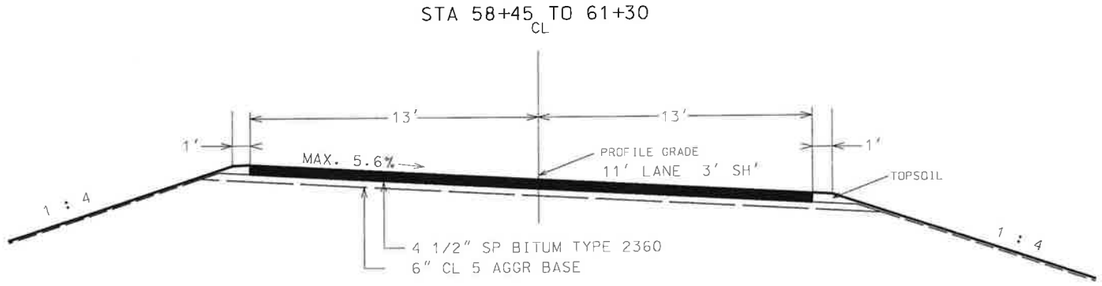

SUPER ELEVATED AGGREGATE SECTION

STA 52+75 TO 58+45
STA 61+30 TO 78+00

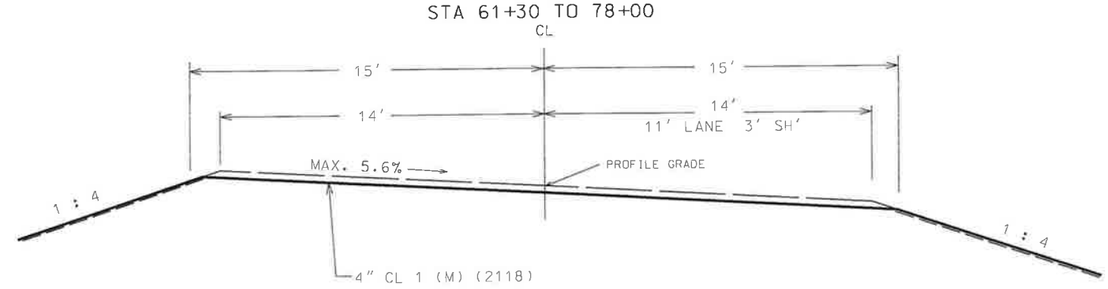

EXISTING CR 152

STA 49+00 TO 79+00

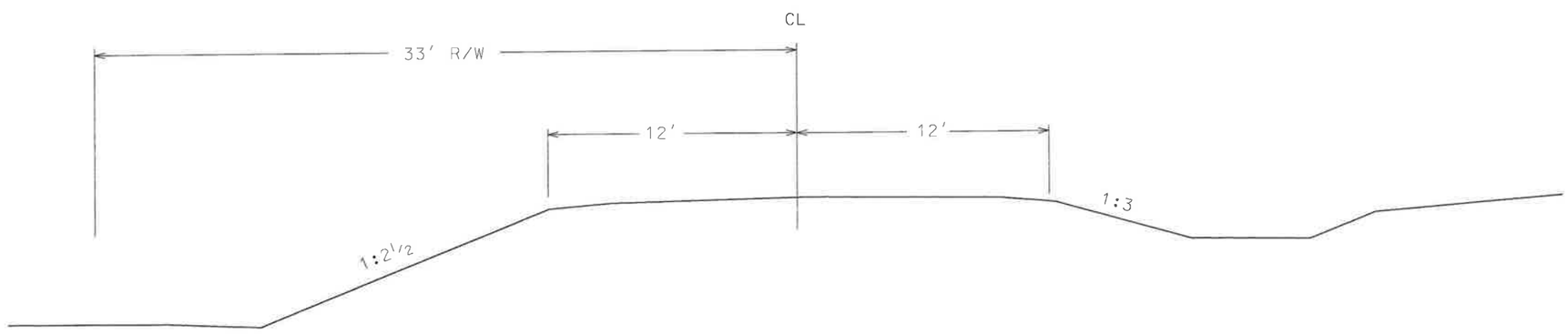

TYPICAL SECTIONS

CERTIFIED BY Alan Forsberg PROFESSIONAL ENGINEER LIC. NO. 14720 FEB. 26, 2010

typical.dgn 3/17/2010 2:57:27 PM

SURFACING & BASE QUANTITIES

LOCATION	LENGTH FEET	AVER WIDTH FEET	DEPTH INCHES	(1) AGGR. SURFACE CL 1 (M) TON	(1) (4) SURFACE CL 2 (M) 1 1/2" TON	(1) AGGR. BASE CL 5 TON	(2) TACK COAT GAL	(3) SP BITUM TYPE 2360 TON
STA 49 + 0 TO STA 58 + 45	945	28	4	620				
STA 52 + 70 TO STA 58 + 0 LT	530	12	4		150			
STA 58 + 45 TO STA 59 + 45	100	33	6			120		
STA 58 + 45 TO STA 59 + 45	100	26	4.5				14	70
STA 60 + 32 TO STA 61 + 30	98	33	6			110		
STA 60 + 32 TO STA 61 + 30	98	26	4.5				14	70
STA 61 + 30 TO STA 78 + 0	1670	28	4	1,090				
3 FIELD ENTRANCES @ 15 TONS			4	45				
TOTAL				1,755	150	230	28	140

(1) AGGREGATE CALCULATED AT 140 LBS. COMPACTED DRY PER CU. FT.
(2) BITUM. MAT'L FOR TACK COAT 0.05 GALS. PER SQ. YD.
(3) BITUM MIXTURE CALCULATED AT 110 LB PER SQ.YD. 1" DEEP
(4) FIELD D.W. RT

REMOVAL QUANTITIES

LOCATION	CLEAR TREE	GRUB TREE	REMOVE FENCE LIN. FT.	REMOVE GUARD RAIL LIN. FT
STA 51 + 75 TO STA 59 + 50 LT	118	101		
STA 58 + 85 TO STA 59 + 35 RT	12	12		
STA 60 + 0 TO STA 62 + 0 LT	46	40		
STA 66 + 0 TO STA 69 + 0 RT	16	16		
STA 58 + 51 TO STA 59 + 45 LT&RT				100
STA 49 + 0 TO STA 52 + 30 RT				330
STA 52 + 17 TO STA 57 + 64 LT			610	
TOTAL	192	169	610	430

SURFACE DRAINAGE

STATION	LOCATION	IN PLACE	REMARKS	REMOVE CULVERT L.F.	REMOVE TILE L.F.	REMOVE BOX CULVERT EACH	18" C.S L.F.	18" C.S APR	60" RC CL II L.F.	60" RC CL II APR
CR 152										
51+51	LT	15" x 44' CS		44			56	2		
52+68	RT	15" x 36' CS	NEW DRIVEWAY IS DRY	36						
52+06	CL	4' x 8' x 44' CP	REMOVE 44 LF OF 4X8 BOX CULVERT			1				
52+13	CL								74	2
65+56	LT	12" x 32' CS		32						
66+71 to 71+00					500					
66+94	LT						40	2		
71+67	RT	15" x 24' CS		24			60	2		
73+95	RT						40	2		
76+67	RT	DRY								
78+87	CL	18" x 38' CS	LEAVE INPLACE							
			GRAND TOTAL	136	500	1	196	8	74	2

EARTH WORK QUANTITIES

STA	Common Exc Cu.Yds.	Emb Cu.Yds.
49+00	0	0
49+50	154	106
50+00	331	205
51+00	650	295
51+50	344	107
52+00	430	164
52+07	62	42
52+50	373	219
53+00	318	142
53+75	474	210
54+77	1326	304
55+80	1532	697
56+82	1300	1156
57+82	1613	1075
58+35	1139	238
58+85	1272	35
59+15	664	64
59+35	229	127
59+45	52	165
59+70	56	293
59+85	0	0
sub total	12319	5644
60+00	0	0
60+32	150	349
60+40	80	112
60+92	431	553
62+00	488	1643
63+00	222	1377
64+00	98	1092
65+00	67	832
66+00	61	580
67+00	43	327
68+00	87	147
69+00	217	53
70+00	397	76
71+00	445	106
72+00	483	49
73+00	585	35
74+00	482	42
75+00	313	20
75+63	185	4
76+00	134	3
77+00	346	14
78+00	153	10
79+00	0	0
sub total	5467	7424
TOTALS	17786	13,068

BALANCE 1.36 %

NOTE: ALL AGGREGATE ON EXISTING ROAD SHALL BE SALVAGED AND USED AS PIPE BEDDING AND FOR LOCAL ACCESS THS WORK SHALL BE INCIDENTAL TO COMMON EXCAVATION.

CHART

P:\CR\152\Bridge\TAB-1.DOC

CERTIFIED BY Alan Forsberg LIC. NO. 14720 Feb. 26, 2010

ALIGNMENT DATA

PI #		PI STA	A	Curve	Tan	Radius	LC	SUPER	NORTHING	EASTING	AZ	DISTANCE
CR 152												
BOP		49+00.00							118694.60	559018.34	NE0^37'10"	985.59
	PC	54+00.00							119194.57	559023.74		
1	PI	58+85.59	68^16'31" Rt	8^	485.59	716.20	853.44	5.6%	119680.13	559028.99	NE68^53'41"	1423.43
	PT	62+53.44							119854.98	559482.01		
	PC	66+94.43							120013.78	559893.42		
2	PI	71+91.29	69^30'03" Lt	8^	496.85	716.20	868.76	5.6%	120192.68	560356.94	NW0^36'23"	934.00
	PT	75+63.20							120689.51	560351.68		
EOP		80+00.34							121126.63	560347.06		

UTILITY LOCATIONS

STATION	LOCATION	INPLACE	REMARKS
HICKORY TECH			
77 + 6	29' RT	TEL. PED.	PROTECT / VERIFY CABLE LOCATIONS

EROSION CONTROL

STATION TO STATION (1)	LOCATION (1)	REMARKS	RIP-RAP TYPE III	SILT FENCE HVY DUTY	SILT FENCE MACH. SLICED	FLOATATION SILT CURTAIN TYPE MOVING WATER	DITCH CHECK TYPE 2	DITCH CHECK TYPE 7	SEDIMENT REMOVAL BACKHOE	BIOLOG	SEDIMENT TRAP
			CU. YD.	LIN. FT	LIN. FT	LIN. FT	LIN. FT	CU. YD.	HOURS	LIN. FT	EACH
			(5)	(3)	(3)			(4)		(3)	
48 + 78 TO 59 + 59	RT						45		1		1
49 + 0 TO 59 + 68	LT			190	380		60			190	
52 + 13		CULVERT ENDS	40								
59 + 50	RT		15								
60 + 25	RT		15								
60 + 25	LT		15								
60 + 0	RIVER - LT					90					
60 + 0 TO 78 + 0	RT			137	137		165	7.5	1	137	1
60 + 0 TO 78 + 0	LT			20	40		315	10	1	20	1
		TOTALS	85	347	557	90	585	18	3	347	3

NOTES:

(1) STATION AND LOCATIONS ARE TO BE USED AS A GUIDE
VERIFY QUANTITIES & LOCATIONS IN THE FIELD.

(2) BASIS OF PAYMENT SPECIFIED IN SPEC. 1903 SHALL BE MODIFIED FOR EROSION CONTROL ITEMS
TO PRECLUDE ANY PRICE ADJUSTMENT FOR INCREASED OR DECREASED QUANTITIES.

(3) SILT BARRIERS TYPE CHOSEN TO BEST FIT FIELD CONDITIONS. FOR BIDDING PURPOSES QUANTITIES ARE ESTIMATED
QUANTITIES ARE SUBJECT TO CHANGE AS DETERMINED BY THE ENGINEER.

(4) ROCK DITCH CHECK WERE ESTIMATED AT APPROX. 2.5 CY PER DITCH CHECK

(5) MIN. 6" FILTER AGGREGATE SHALL BE PLACED UNDER RIP-RAP. FILTER AGGREGATE INCIDENTAL TO RIP-RAP.

TURF ESTABLISHMENT

LOCATION	LIMITS FROM SHOULDER	AREA SQ. F.T	SEEDING	SEEDING MIX # 150 40 LBS / ACRE	SEEDING MIX # 280 50 LBS / ACRE	MULCH TYPE1 2 TON / ACRE	DISK ANCHOR	CAT. 4 EROSION CONTROL BLANKET	FERTILIZER 20-10-20 350# / ACRE	HYDRAULIC SOIL STABILIZER TYPE 5 EST @ 2100# / ACRE
			ACRE	LBS	LBS	TON	ACRE	SQ. YD.	LBS	LBS
48 + 78 TO 59 + 59 RT	RIGHT OF WAY	98,382	2.3		112.9	4.5	2.3		790	
49 + 0 TO 59 + 67 LT	RIGHT OF WAY	47,762	1.1		54.8	2.2	1.1	203	384	
60 + 0 TO 76 + 59 RT	ROW / GRADING LIMITS	80,751	1.9		92.7	3.7	1.9	712	649	
59 + 99 TO 78 + 0 LT	RIGHT OF WAY	71,455	1.6		82.0	3.3	1.6	889	574	
76 + 77 TO 78 + 0 RT	RIGHT OF WAY	2,148	0.1		5.0	0.2	0.1		35	
TEMPORARY EROSION CONTROL	ESTIMATED AS NEEDED		2.1	83.4		4.2	2.1			900
		TOTALS	9	83	347	18	9	1,804	2,432	900

SUMMARY OF IMPERVIOUS & PERVIOUS
(NPDES PERMIT)

	Disturbed area	Before Construction (Impervious)	Before Construction Pervious	After Construction (Impervious)	After Construction Pervious
total sq ft.	382,724	69,600	313,124	81,200	301,524
Acres	**8.8**	**1.6**	**7.2**	**1.9**	**6.9**

EROSION CONTROL QUANTITIES

CERTIFIED BY Alan Forsberg LIC. NO. 14720 Feb. 26, 2010

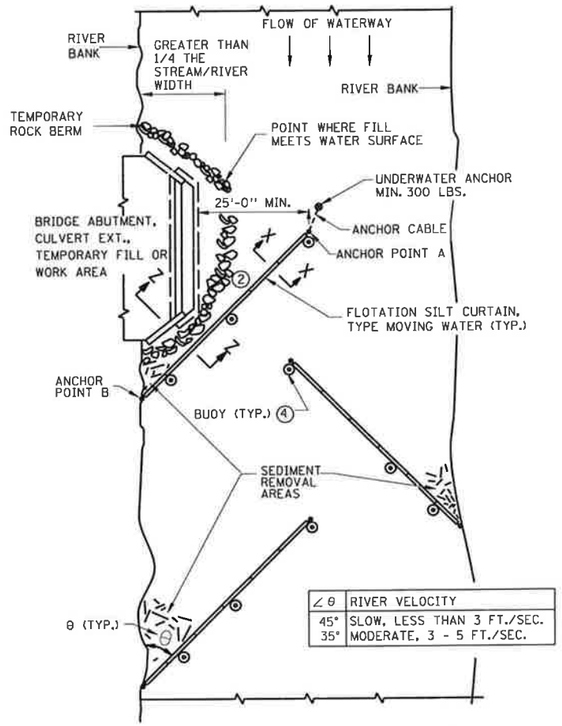

∠θ	RIVER VELOCITY
45°	SLOW, LESS THAN 3 FT./SEC.
35°	MODERATE, 3 - 5 FT./SEC.

PLAN VIEW (TYPE: MOVING WATER)

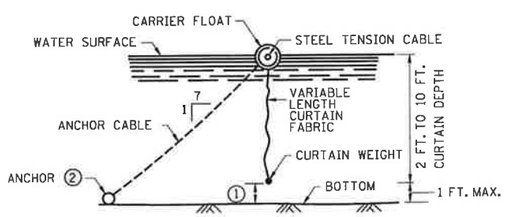

SECTION X-X

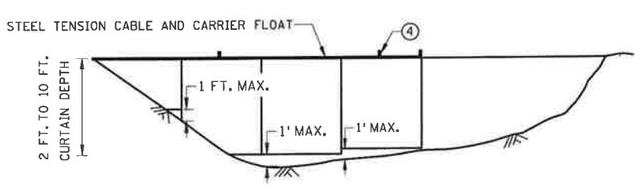

FLOTATION SILT CURTAIN - TYPE: MOVING WATER 5

USE FOR SMALLER RIVERS WITH SLOW AND MODERATE VELOCITIES

DESIGN GUIDELINES:
MOVING WATER

WHEN TEMPORARY FILL ENCROACHES MORE THAN 1/4 BUT LESS THAN 1/3 WIDTH OF THE STREAM.
MINIMUM WATER DEPTH: 3 FT. 1 6
MAXIMUM WATER DEPTH: 11 FT.
MAXIMUM WATER VELOCITY: 5 FT./SEC.

NOTES:

SEE SPECS. 2573 & 3887.

1 CURTAIN EXTENDS TO 1 FT. MAXIMUM FROM BOTTOM OF WATER BODY.

2 FOR ANCHOR AND WEIGHT REQUIREMENTS, SEE SPEC. 2573.

4 ON U.S. COAST GUARD OR OTHER MOTORIZED WATERWAYS, BUOYS ARE REQUIRED TO MARK THE ENDS AND SPECIAL AREAS FOR VISIBILITY. PLACE BUOYS AS REQUIRED FOR NAVIGATIONAL PURPOSES.

5 WATER DEPTH CAN BE 0 TO 10 FEET, 0 TO 11 FEET FOR TYPE MOVING WATER.

TEMPORARY SEDIMENT TRAP

TOP VIEW

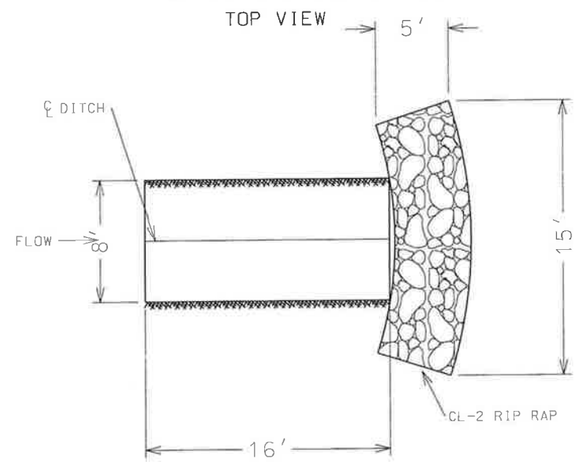

TEMPORARY SEDIMENT TRAP

SIDE VIEW

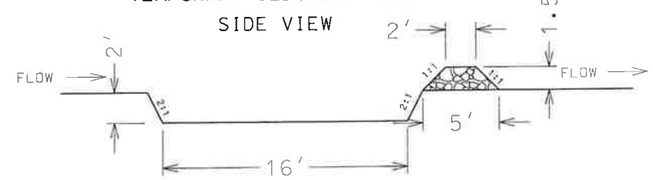

NOTE: ALL EXCAVATION AND RIP RAP INCLUDED IN BID ITEM 2573.602 TEMPORARY SEDIMENT TRAP

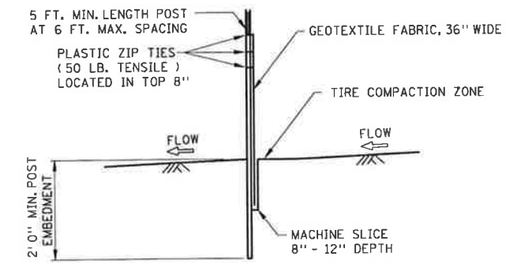

SILT FENCE, MACHINE SLICED

DESIGN GUIDELINES:
TO PROTECT AREAS FROM SHEET FLOW.
MAXIMUM CONTRIBUTING AREA: 1 ACRE.

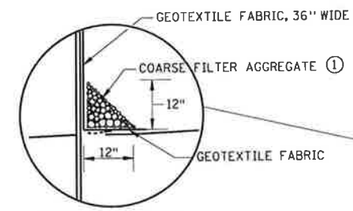

OPTIONAL METHOD FOR SILT FENCE, HEAVY DUTY

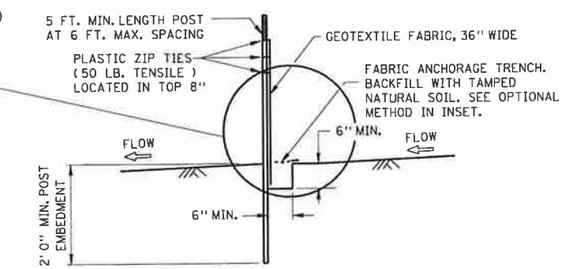

SILT FENCE, HEAVY DUTY
(HAND INSTALLED)

DESIGN GUIDELINES:
TO PROTECT AREAS FROM SHEET FLOW.
MAXIMUM CONTRIBUTING AREA: 1 ACRE.

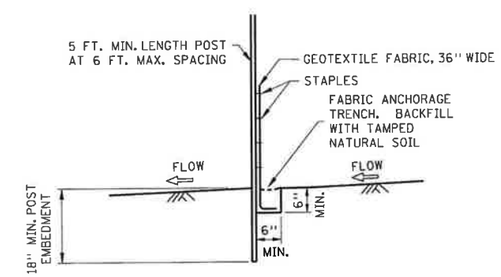

SILT FENCE, PREASSEMBLED

DESIGN GUIDELINES:
TO PROTECT AREAS FROM SHEET FLOW.
MAXIMUM CONTRIBUTING AREA: 1 ACRE.

NOTES:

SEE SPECS. 2573, 3149 & 3886.

1 COARSE FILTER AGGREGATE (SPEC. 3149) SHALL BE INCIDENTAL.

TEMPORARY EROSION CONTROL

CERTIFIED BY Alan Forsberg ALAN FORSBERG REG. NO. 14720 PROFESSIONAL ENGINEER FEB. 26, 2010

SAP 07-598-26 CR 152 SHEET 7 OF 18 SHEETS

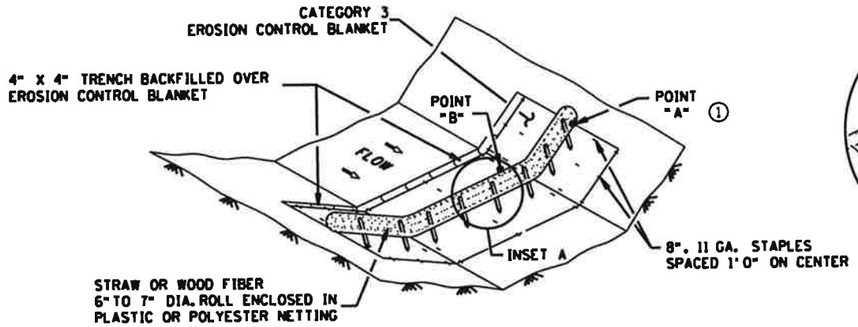

TYPE 3: BIOROLL BLANKET SYSTEM DITCH CHECK

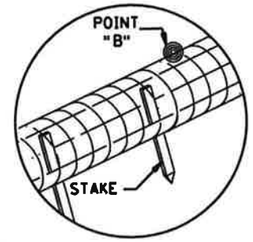

INSET A

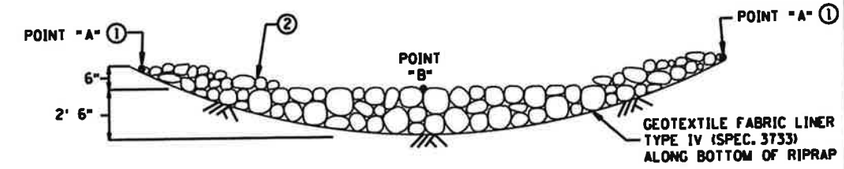

CROSS SECTION (ROCK WEEPER AND ROCK CHECK)

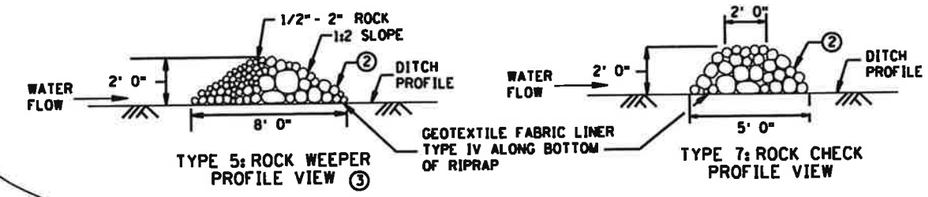

TYPE 5: ROCK WEEPER
PROFILE VIEW ③

TYPE 7: ROCK CHECK
PROFILE VIEW

TYPE 5: ROCK WEEPER AND
TYPE 7: ROCK CHECK DITCH CHECKS ④

USE ON ROUGH GRADED AREAS

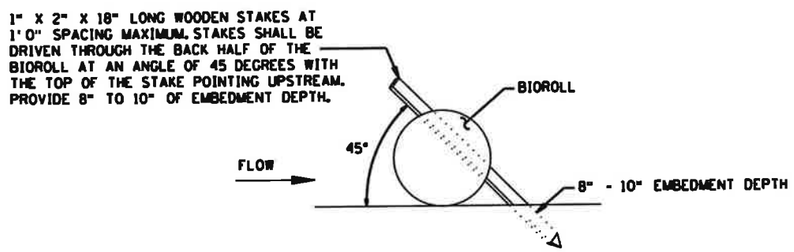

BIOROLL STAKING DETAIL

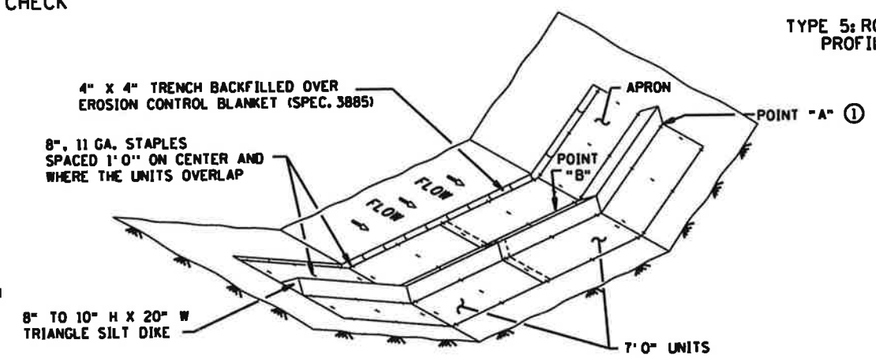

TYPE 6: GEOTEXTILE TRIANGULAR DIKE DITCH CHECK

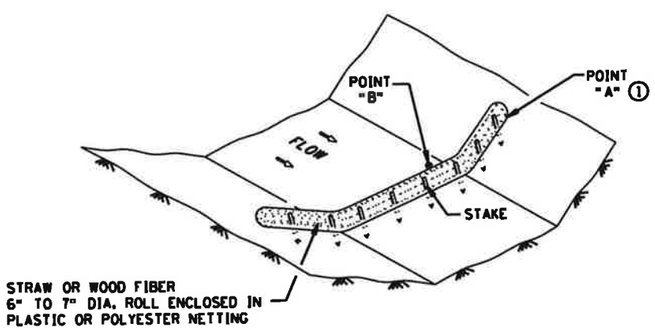

TYPE 2: BIOROLL DITCH CHECK

USE ON ROUGH GRADED AREAS

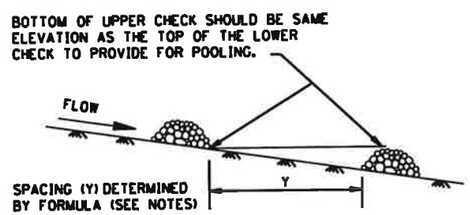

DITCH CHECK SPACING ④

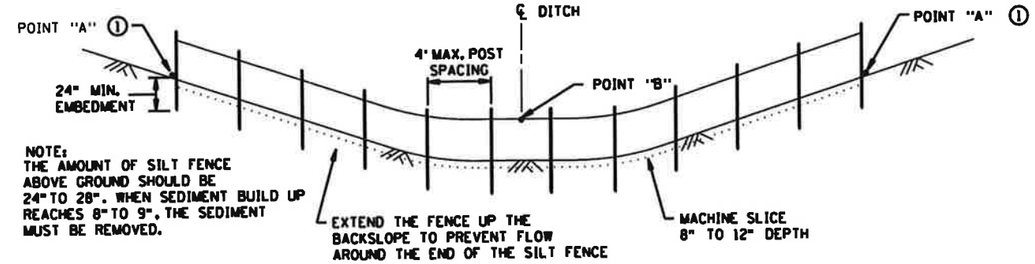

TYPE 1: SLICED IN SILT FENCE DITCH CHECK

NOTES:

SEE SPECS. 2573, 3601, 3733, 3885, 3886 & 3889.

APPROXIMATE SPACING BETWEEN EACH DITCH CHECK SHOULD BE DETERMINED FROM THE FOLLOWING SPACING FORMULA:

$$\text{APPROXIMATE SPACING OF DITCH CHECKS (FT.)} = Y = \frac{\text{DITCH CHECK HEIGHT (FT)}}{\text{\% CHANNEL SLOPE}} \times 100$$

① POINT "A" MUST BE A MINIMUM OF 6 INCHES HIGHER THAN POINT "B" TO ENSURE THAT WATER FLOWS OVER THE DIKE AND NOT AROUND THE ENDS.

② CLASS I - IV RIPRAP (SPEC. 3601) WITH GEOTEXTILE FABRIC LINER, TYPE IV (SPEC. 3733).

③ THE ROCK WEEPER FILTERS SEDIMENT OUT OF THE WATER BETTER THAN THE OTHER DITCH CHECKS. THE ROCK WEEPER COULD BE USED AS A PERMANENT WATER FILTERING FEATURE.

④ PERMANENT ROCK DITCH CHECKS PLACED WITHIN THE CLEAR ZONE WILL NEED TO BE 18" OR LESS IN HEIGHT. A 1:6 APPROACH AND DEPARTURE SLOPE SHALL BE PROVIDED.

GENERAL DESIGN GUIDELINES

DITCH CHECK TYPE	SILT FENCE	BIOROLL	BIOROLL BLANKET	TRIANGULAR DIKE	ROCK WEEPER	ROCK CHECK
STORM FREQUENCY: MAX. FLOW VELOCITY: MAX. DITCH GRADE: MAX. DRAINAGE AREA:	2 YR. - 24 HR. < 1 FT./SECOND 0% - 0.5% 1 ACRE	2 YR. - 24 HR. 1.5 FT./SECOND 1.5% - 3% 2 ACRE	2 YR. - 24 HR. 4.5 FT./SECOND 1.5% - 3% 2 ACRE	2 YR. - 24 HR. 1.5 FT./SECOND 1.5% - 2.0% 4 ACRE	5 YR. - 24 HR. 12 FT./SECOND 3% - 5% 4+ ACRE	5 YR. - 24 HR. 12 FT./SECOND 3% - 5% 4+ ACRE

STANDARD SHEET NO.
5-297.405 (3 OF 4)
STANDARD APPROVED:
SEPTEMBER 27, 2006

TEMPORARY SEDIMENT CONTROL
DITCH CHECK/BARRIER

SAP 07-598-26 CR. 152 SHEET NO. 8 OF 18 SHEETS

Erosion-Detail2.dgn 3/17/2010 3:00:40 PM

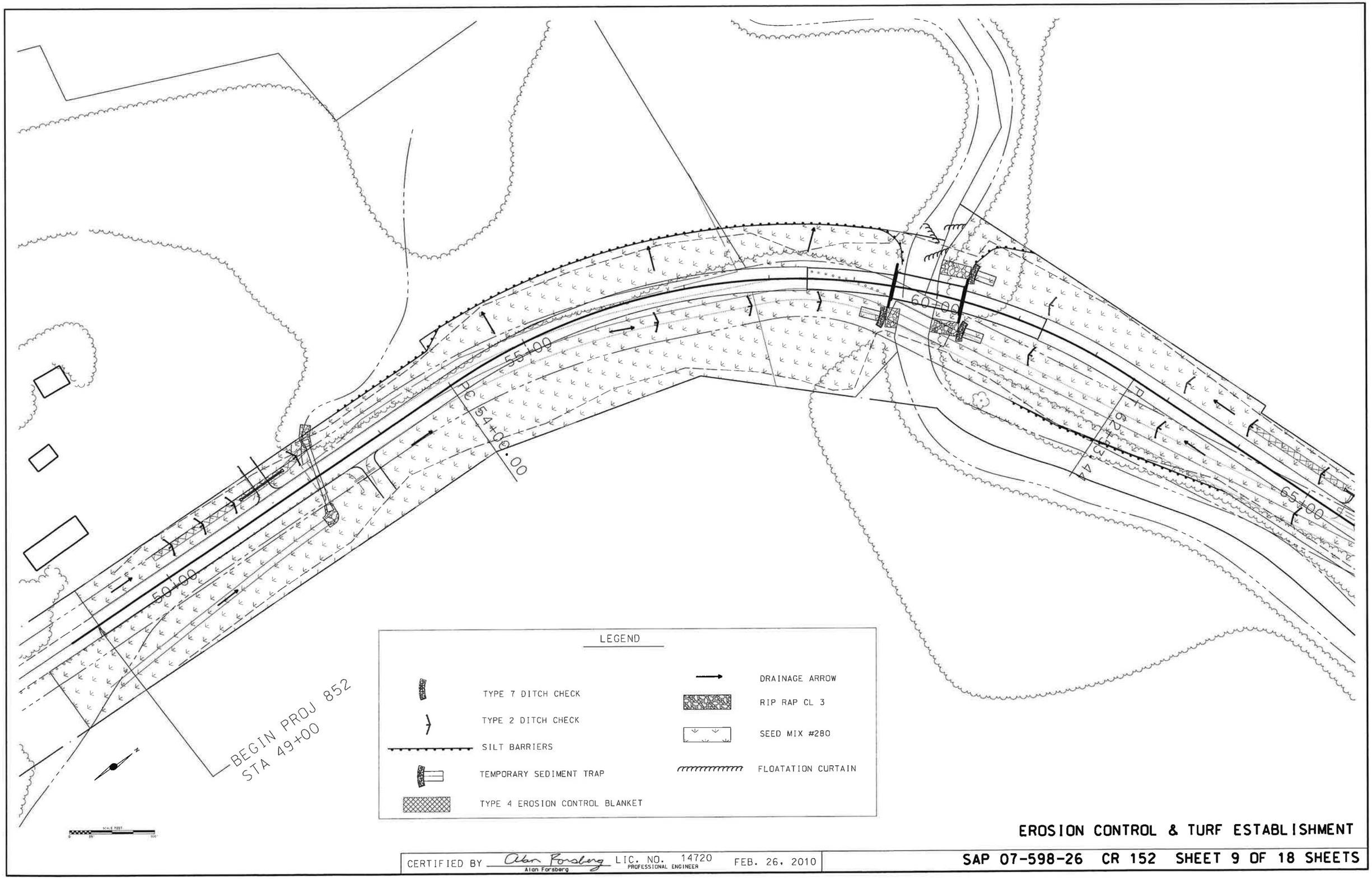

EROSION CONTROL & TURF ESTABLISHMENT

CERTIFIED BY Alan Forsberg LIC. NO. 14720 PROFESSIONAL ENGINEER FEB. 26, 2010

SAP 07-598-26 CR 152 SHEET 9 OF 18 SHEETS

Const.dgn 9/1/2010 8:33:37 AM

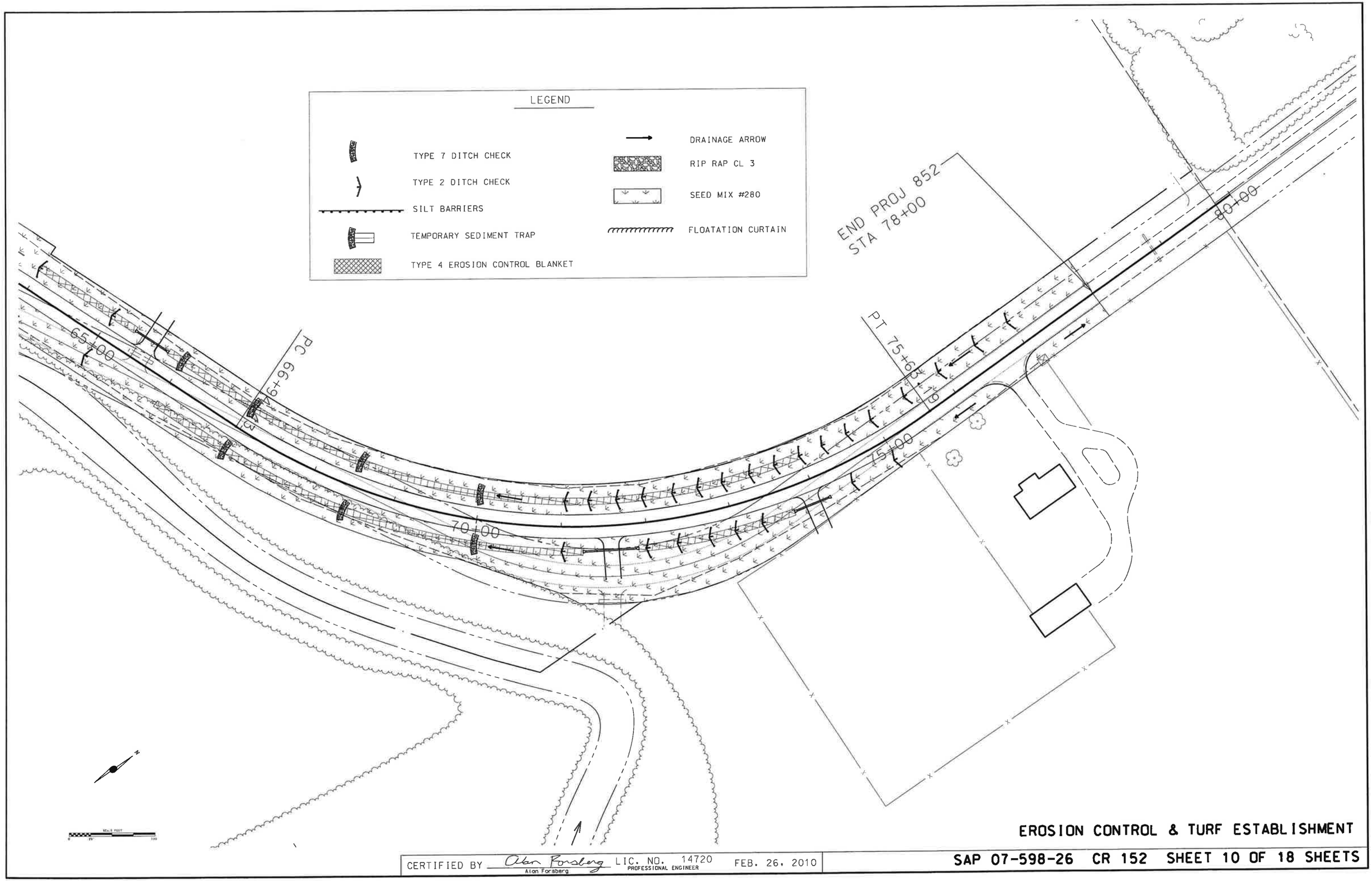

EROSION CONTROL & TURF ESTABLISHMENT

CERTIFIED BY Alan Forsberg LIC. NO. 14720 PROFESSIONAL ENGINEER FEB. 26, 2010

SAP 07-598-26 CR 152 SHEET 10 OF 18 SHEETS

Const2.dgn 9/1/2010 8:34:17 AM

ALL UNDERGROUND UTILITIES
LOCATIONS ARE APPROXIMATE

GROEBNER RUSSELL J

UPSTREAM ½ MILE
BRIDGE NO. 6797
PRE-CAST STEEL BEAM SPAN
BUILT 1953

SHARP JARRETT G

END PROJ 852
STA 78+00

EXISTING BR NO. 90556
STEEL PLCK GIRDER
BUILD 1920
REHAB 1936

CR 152

PC 54+00.00

PC 66+00.00

PT 75+82.

BEGIN PROJ 852
STA 49+00

FISCHER HARLEN J & NYLEN G

UPSTREAM 3½ MILES
ON TCSAM 29 / 1130
BRIDGE NO. 7
PRE-CAST SPAN
BUILT 1956

MCSHANE JAMF

BLOWERS WILLIS
& PATRICK KAREN

SCALE
0 100 200

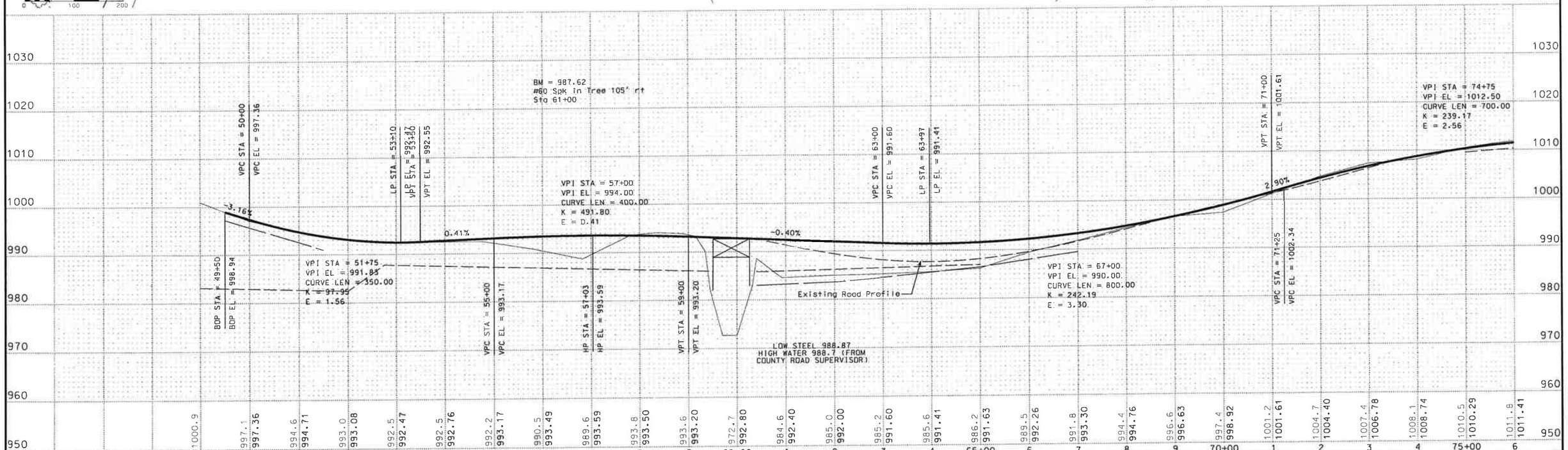

CERTIFIED BY Alan Forsberg PROFESSIONAL ENGINEER LIC. NO. 14720 FEB. 26 2010

SAP 07-598-26 CR 152 SHEET 11 OF 18 SHEETS

RCp01001.dgn 9/16/2010 1:30:17 PM

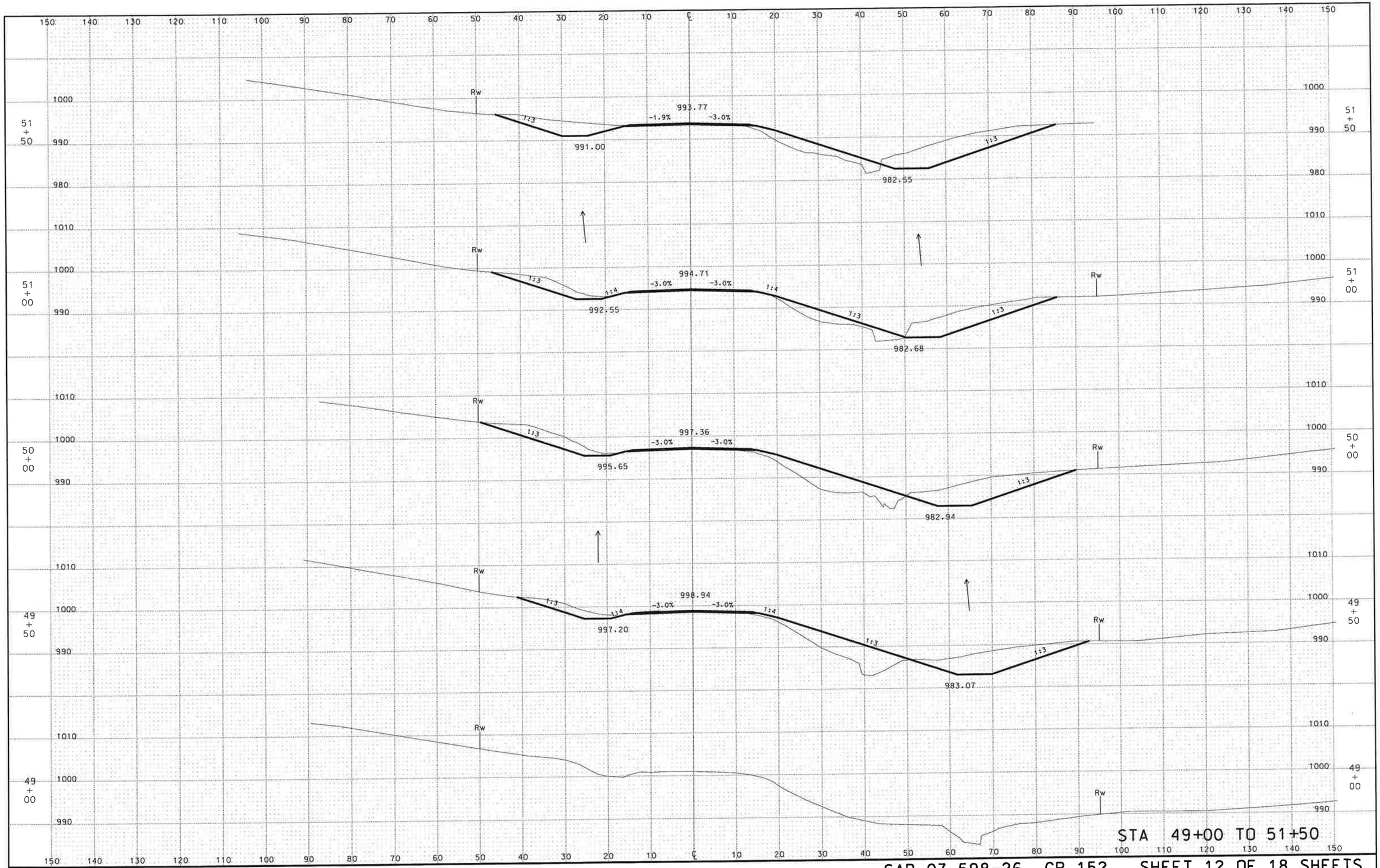

SAP 07-598-26 CR 152 SHEET 12 OF 18 SHEETS

rc001001.dgn 3/17/2010 3:03:30 PM

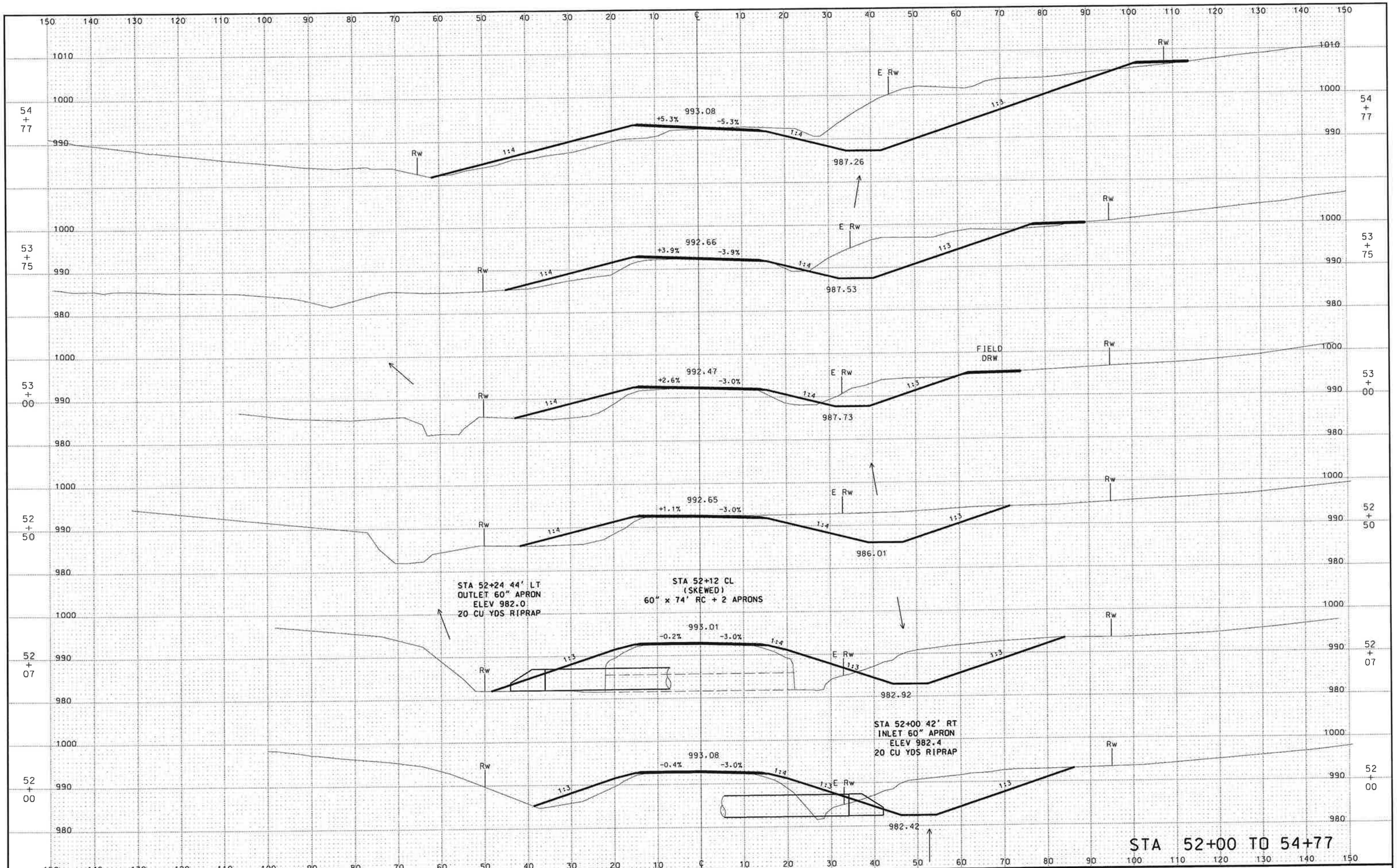

SAP 07-598-26 CR 152 SHEET 13 OF 18 SHEETS

rc002001.dgn 9/16/2010 1:27:10 PM

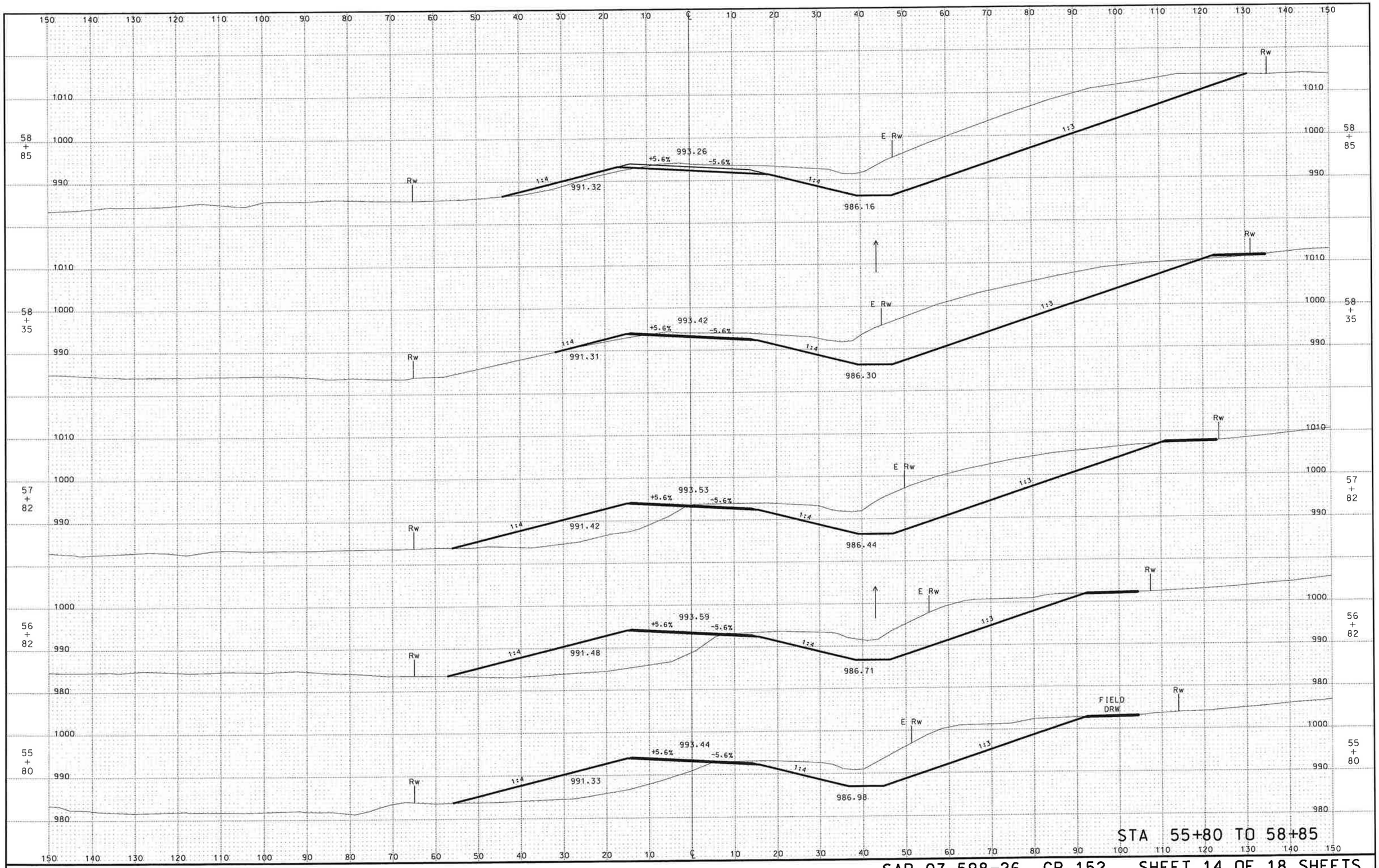

SAP 07-598-26 CR 152 SHEET 14 OF 18 SHEETS

rc003001.dgn 9/16/2010 1:26:19 PM

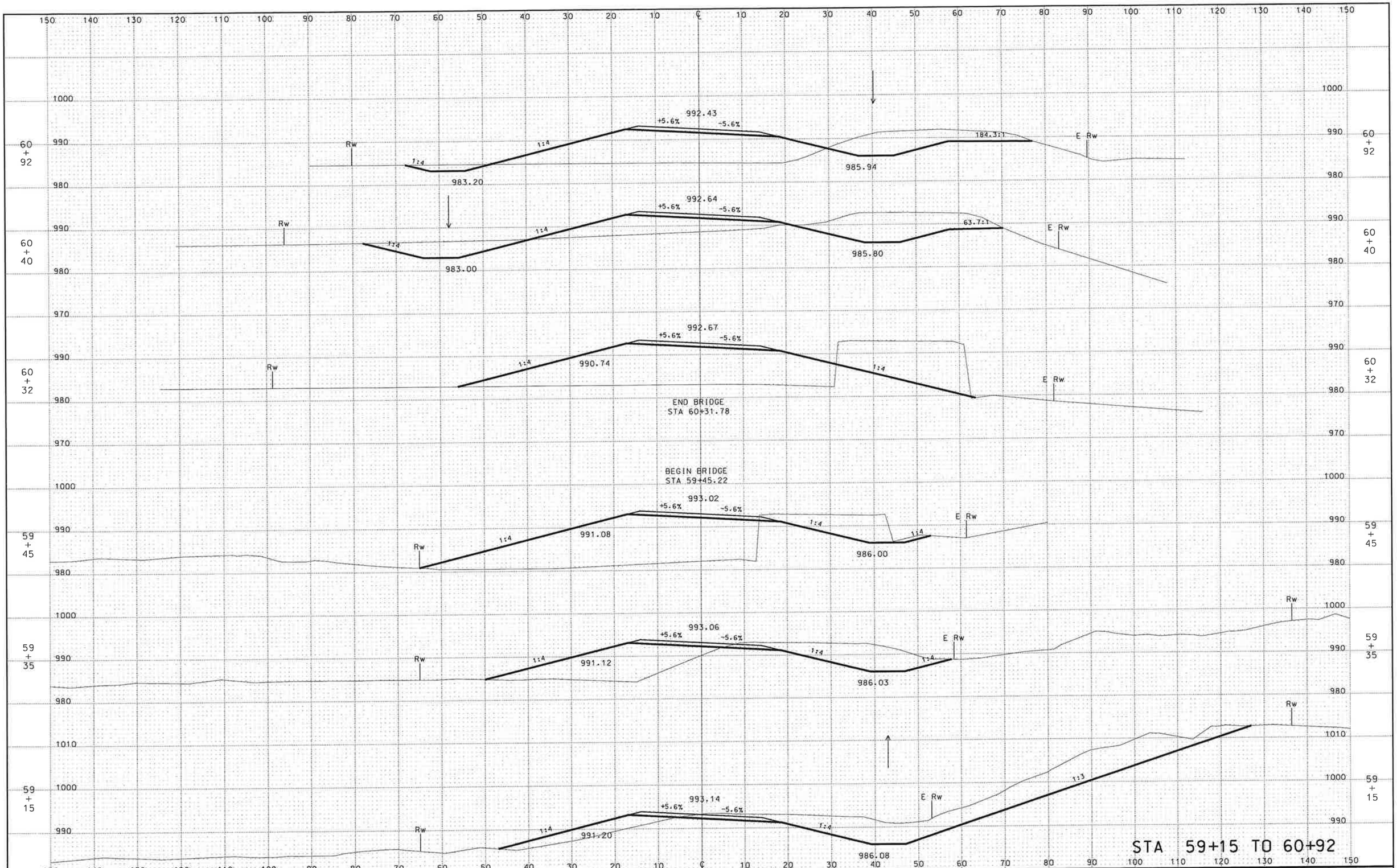

SAP 07-598-26 CR 152 SHEET 15 OF 18 SHEETS

rc004001.dgn 3/17/2010 3:04:05 PM

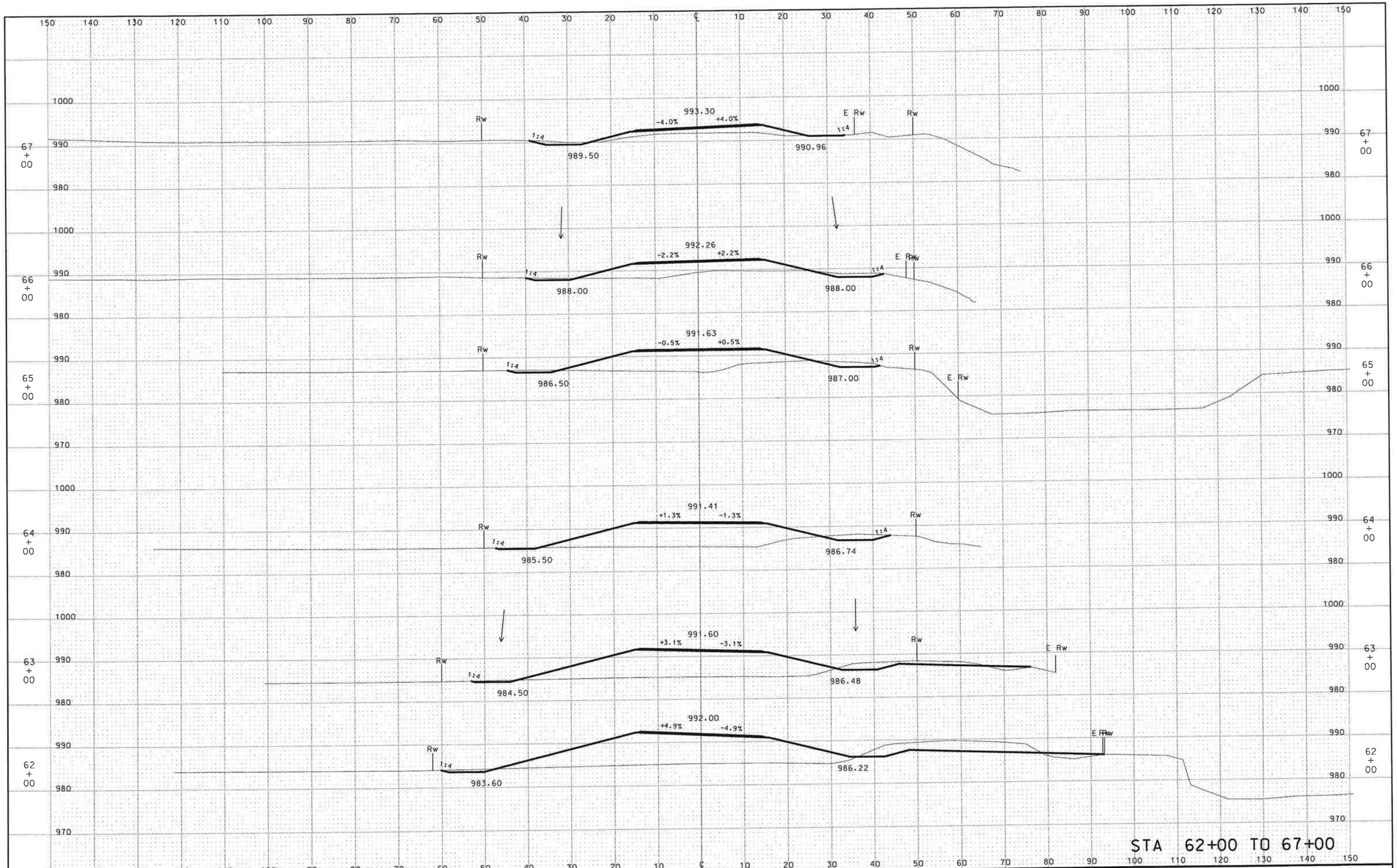

SAP 07-598-26 CR 152 SHEET 16 OF 18 SHEETS

rc005001.dgn 3/17/2010 3:04:16 PM

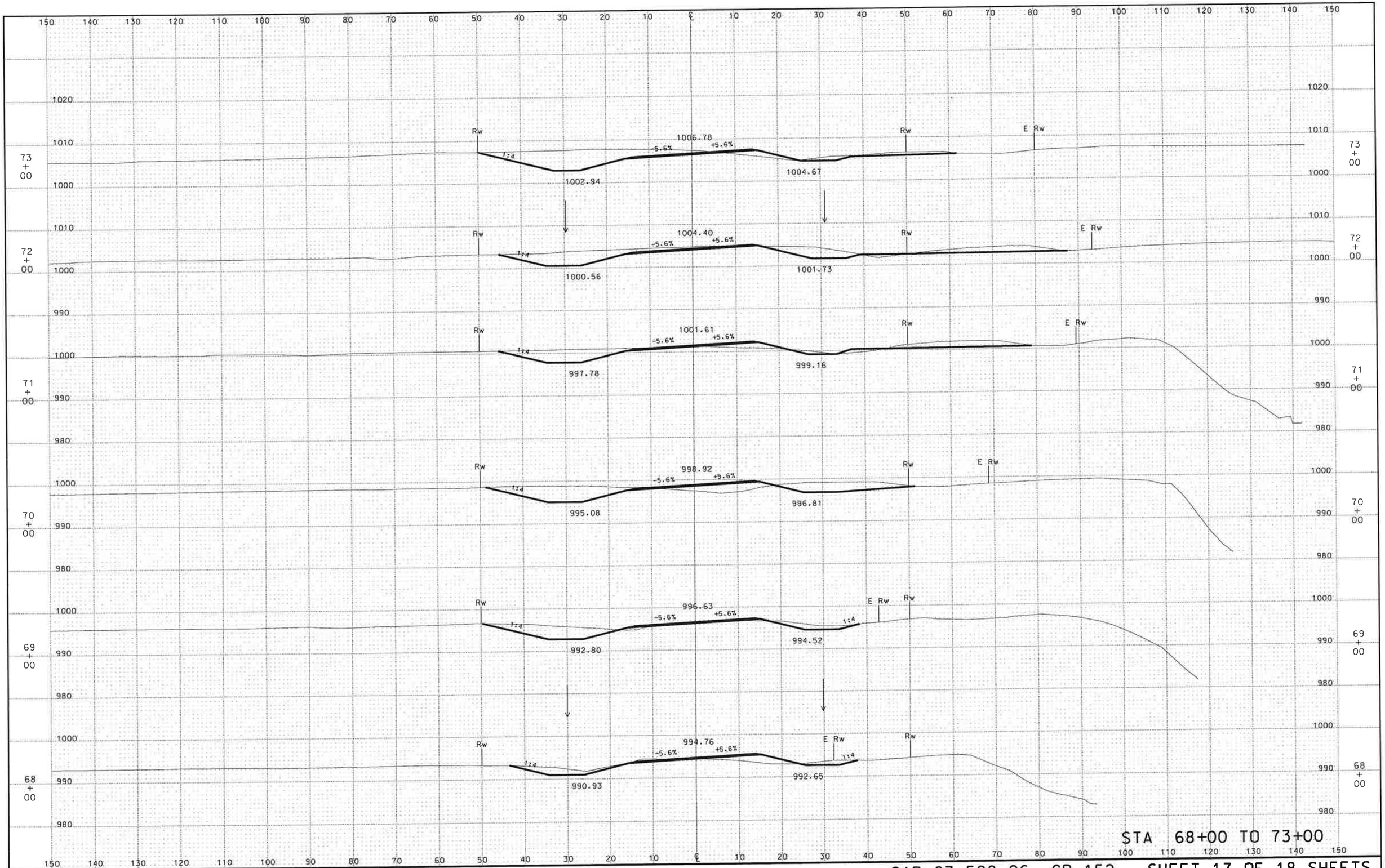

SAP 07-598-26 CR 152 SHEET 17 OF 18 SHEETS

rc006001.dgn 3/17/2010 3:04:35 PM

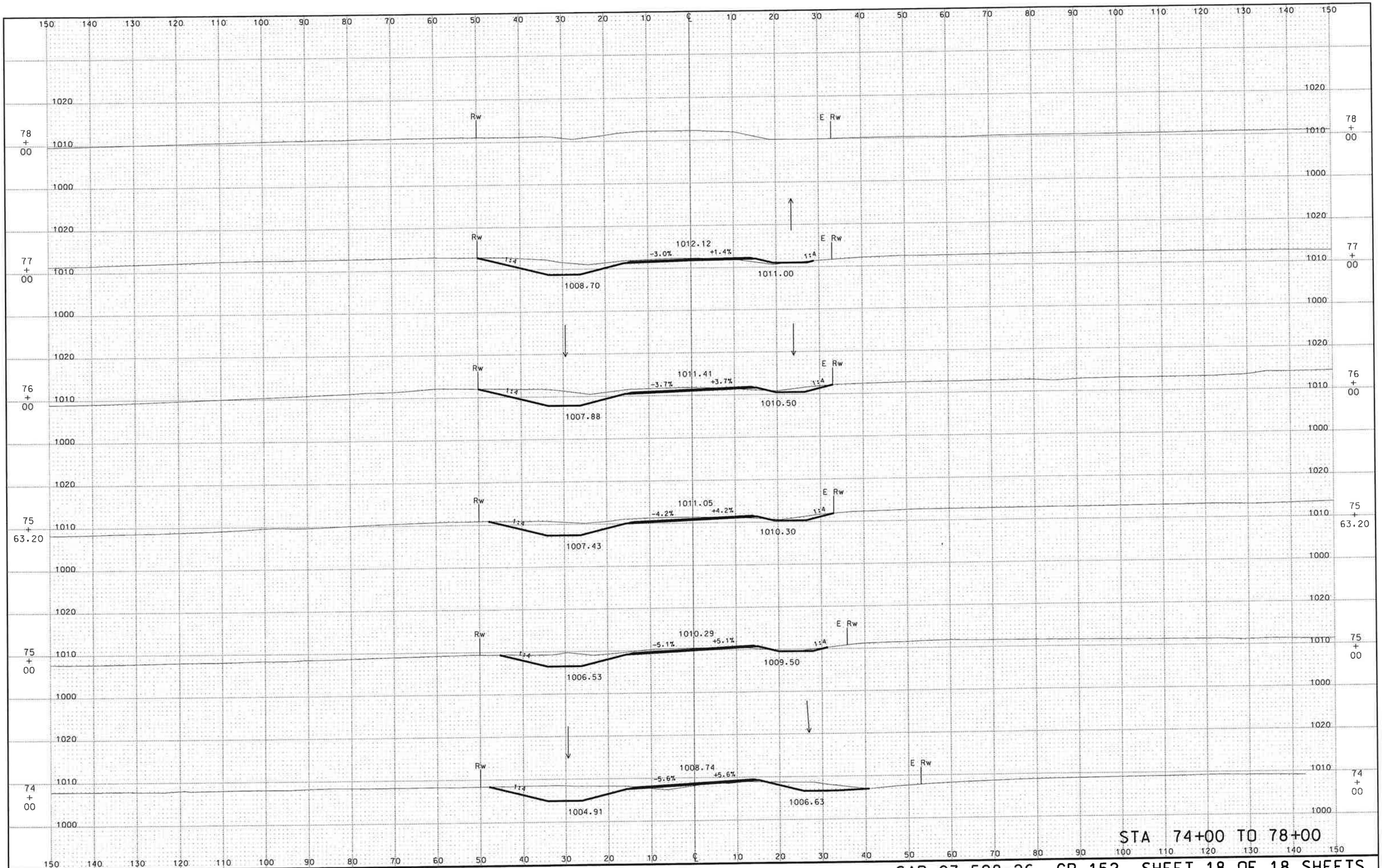

SAP 07-598-26 CR 152 SHEET 18 OF 18 SHEETS

rc007001.dgn 3/17/2010 3:04:49 PM

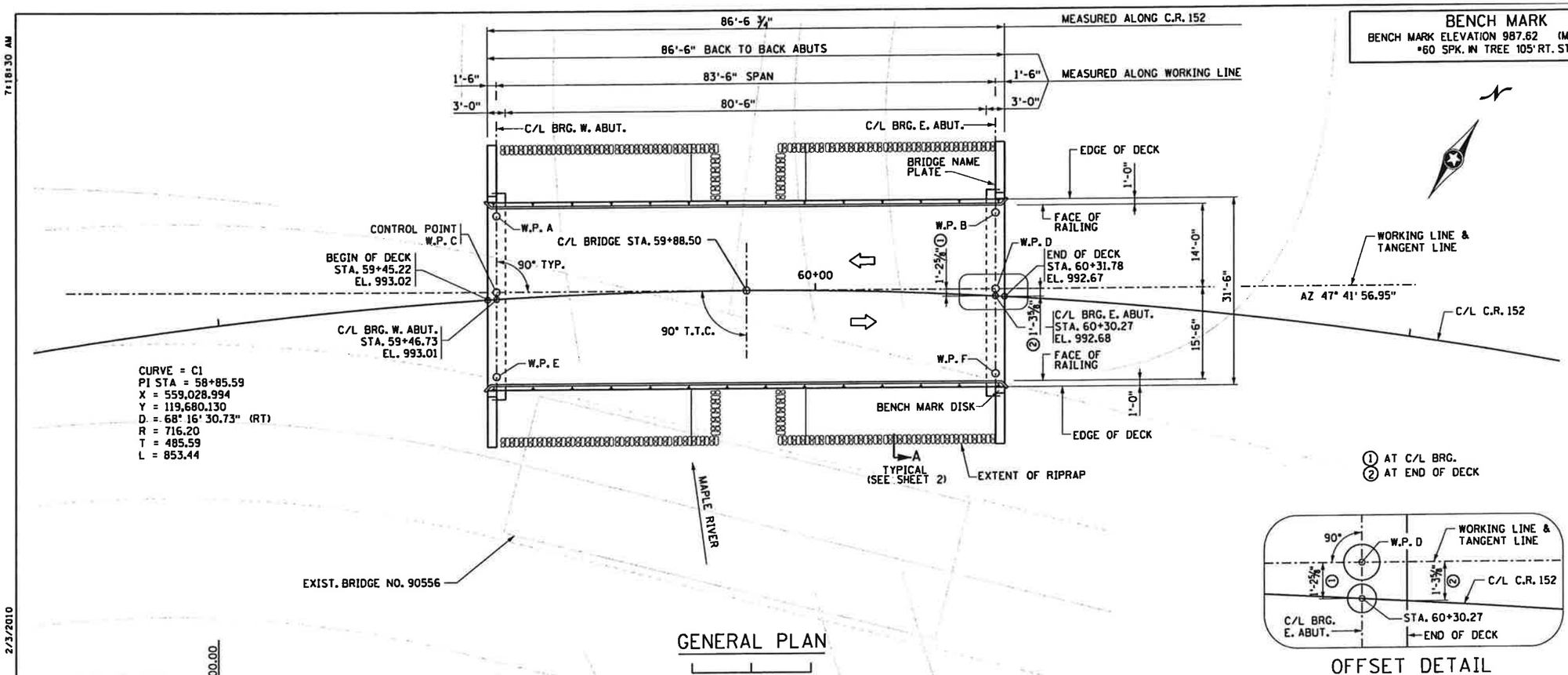

GENERAL PLAN

0 10 20

① AT C/L BRG.
② AT END OF DECK

OFFSET DETAIL

EAST ABUT SHOWN
WEST ABUT SIMILAR
EXCEPT OPPOSITE HAND

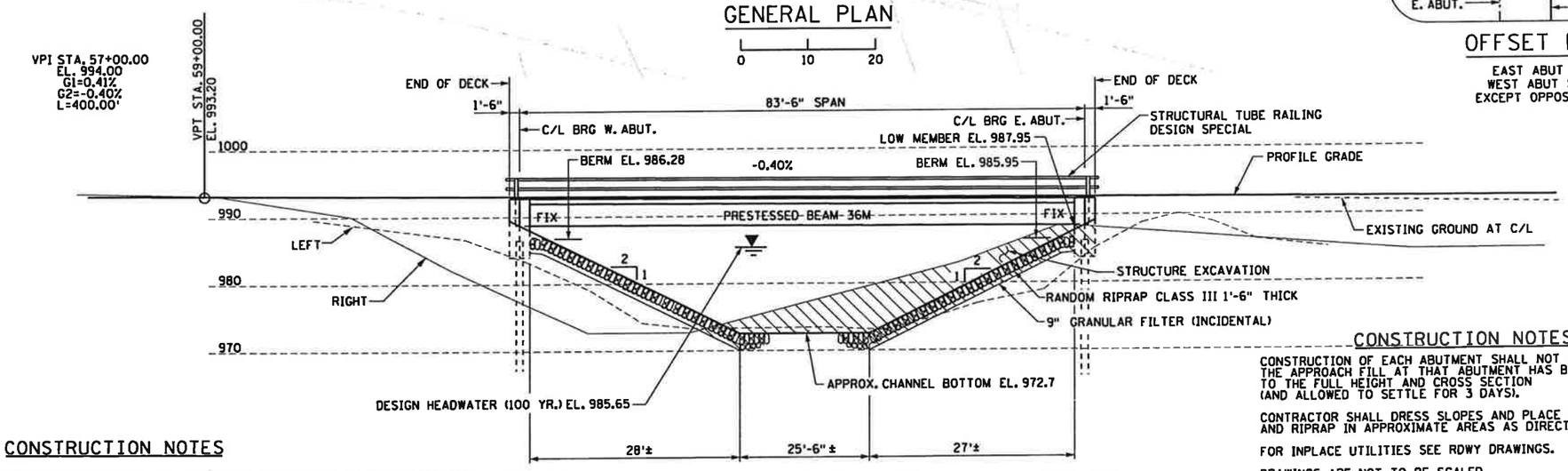

GENERAL ELEVATION

0 10 20

CONSTRUCTION NOTES

THE 2005 EDITION OF THE MINNESOTA DEPARTMENT OF TRANSPORTATION "STANDARD SPECIFICATIONS FOR CONSTRUCTION" SHALL GOVERN.

THE FIRST TWO DIGITS OF EACH BAR MARK INDICATE THE BAR NUMBER WHICH APPROXIMATES THE NOMINAL DIAMETER OF THE BAR IN MILLIMETERS (mm).

BARS MARKED WITH THE SUFFIX "E" SHALL BE EPOXY COATED IN ACCORDANCE WITH SPEC. 3301.

THE SUBSURFACE UTILITY INFORMATION IN THIS PLAN IS UTILITY QUALITY LEVEL D. THIS UTILITY QUALITY LEVEL WAS DETERMINED ACCORDING TO THE GUIDELINES OF CI/ASCE 38-02, ENTITLED "STANDARD GUIDELINES FOR THE COLLECTION AND DEPICTION OF EXISTING SUBSURFACE UTILITY DATA".

THE PILE LOADS SHOWN IN THE PLANS AND THE CORRESPONDING NOMINAL PILE BEARING RESISTANCE (Rn) WERE COMPUTED USING LRFD METHODOLOGY. PILE BEARING RESISTANCE DETERMINED IN THE FIELD SHALL INCORPORATE THE METHODS AND/OR FORMULAS DESCRIBED IN THE SPECIAL PROVISIONS.

CONSTRUCTION NOTES

CONSTRUCTION OF EACH ABUTMENT SHALL NOT BE STARTED UNTIL THE APPROACH FILL AT THAT ABUTMENT HAS BEEN CONSTRUCTED TO THE FULL HEIGHT AND CROSS SECTION (AND ALLOWED TO SETTLE FOR 3 DAYS).

CONTRACTOR SHALL DRESS SLOPES AND PLACE FILTER MATERIALS AND RIPRAP IN APPROXIMATE AREAS AS DIRECTED BY THE ENGINEER.

FOR INPLACE UTILITIES SEE RDWY DRAWINGS.

DRAWINGS ARE NOT TO BE SCALED.

APPROACH FILL AND ROUGH GRADING PROVIDED UNDER GRADING PORTION OF CONTRACT. RESTORATION OF SIDE SLOPES SHALL BE INCLUDED IN PRICE BID FOR STRUCTURE EXCAVATION. FORESLOPE SHALL BE PLACED AND COMPACTED IN SUBSTANTIAL CONFORMANCE WITH ITS FINAL SHAPE BEFORE ABUTMENT IS BACKFILLED.

EXISTING UTILITIES TO BE RELOCATED UNDER GRADING PORTION OF THE CONTRACT.

THE CONTRACTOR SHALL MAKE FIELD MEASUREMENTS AS NECESSARY PRIOR TO FABRICATION OF ALL COMPONENTS TO ASSURE PROPER FIT IN THE FINAL WORK.

HATCH AREA INCLUDED IN STRUCTURE EXCAVATION. SEE BRIDGE SURVEY PLAN AND PROFILE SHEET.

BACKFILL WITH SELECT GRANULAR INCLUDED IN STRUCTURE EXCAVATION.

BENCH MARK

BENCH MARK ELEVATION 987.62 (M.S.L. xxxx ADJ.)
*60 SPK. IN TREE 105' RT. STA. 61+00

DESIGN DATA

2007 AND CURRENT INTERIM AASHTO LRFD BRIDGE DESIGN SPECIFICATIONS
LOAD AND RESISTANCE FACTOR DESIGN METHOD

HL 93 LIVE LOAD
DEAD LOAD INCLUDES 20 psf ALLOWANCE FOR FUTURE WEARING COURSE MODIFICATIONS

MATERIAL DESIGN PROPERTIES:
REINFORCED CONCRETE:
f'c= 4 ksi n = 8
Fy= 60 ksi FOR REINFORCEMENT
PRESTRESSED CONCRETE:
f'c= 8 ksi n = 1
fpu= 270 ksi FOR LOW RELAXATION STRANDS
DECK AREA = 2725 SQ FT
DESIGN SPEED OVER = 40 MPH
BRIDGE OPERATING RATING RF= 1.93

LIST OF SHEETS

NO.	DESCRIPTION
B1	GENERAL PLAN AND ELEVATION
B2	BRIDGE QUANTITIES & TYPICAL SECTION
B3	BRIDGE LAYOUT
B4-B5	WEST ABUTMENT
B6-B7	EAST ABUTMENT
B8	ABUTMENT BARLIST AND QUANTITIES
B9	FRAMING PLAN
B10	36" PRESTRESSED CONCRETE BEAM
B11-B12	SUPERSTRUCTURE DETAILS
B13	SUPERSTRUCTURE BARLIST AND QUANTITIES
B14	STRUCTURAL TUBE RAILING DESIGN SPECIAL
B15-B18	B DETAILS
B19	AS BUILT BRIDGE DATA
B20	BRIDGE SURVEY
B21	BRIDGE SURVEY PLAN AND PROFILE

TRAFFIC VOLUMES

30 ADT (2010)

APPROVED Allan Beasley
BLUE EARTH COUNTY ENGINEER
DATE 08 Feb 10

SEH
3535 VADNAIS CENTER DRIVE
ST PAUL, MN 55110
PHONE (651) 490-2000
FAX (651) 490-2150

I HEREBY CERTIFY THAT THIS PLAN WAS PREPARED BY ME OR UNDER MY DIRECT SUPERVISION AND THAT I AM A DULY LICENSED PROFESSIONAL ENGINEER UNDER THE LAWS OF THE STATE OF MINNESOTA.

SIGNED Nathan C Klopp DATE 2-3-2010

NAME NATHAN C KLOPP LIC NO 43836

C.R. 152
MINNESOTA
DEPARTMENT OF TRANSPORTATION

BRIDGE NO. 07557

PROPOSED BRIDGE LOCATED
CR 152 OVER THE MAPLE RIVER
IN BLUE EARTH COUNTY
(1) 83'-6" PRESTRESSED BEAM SPAN
32'-0" WIDE (INCLUDES (2) 11'-0" LANES

IDENTIFICATION NO 501

GENERAL PLAN AND ELEVATION

SEC 14 TWP 105 N R 27 W
STERLING TOWNSHIP BLUE EARTH CO

APPROVED Wamuel Wagyam
STATE BRIDGE ENGINEER
DATE 4/6/10

DES. NCK	DR. MAW	07557
CHK. JAJ	CHK. JAJ	

JOB NO. DESIGN REVIEW UNIT:

STATE AID PROJ NO 07-598-26

SHEET NO B1 OF B21 SHEETS

S:\AE\B\Bluep\107252\5-dsgn\51-cadd\Cr152\bridge\cbr07557_gpl.dgn 2/3/2010 7:18:30 AM CR 152

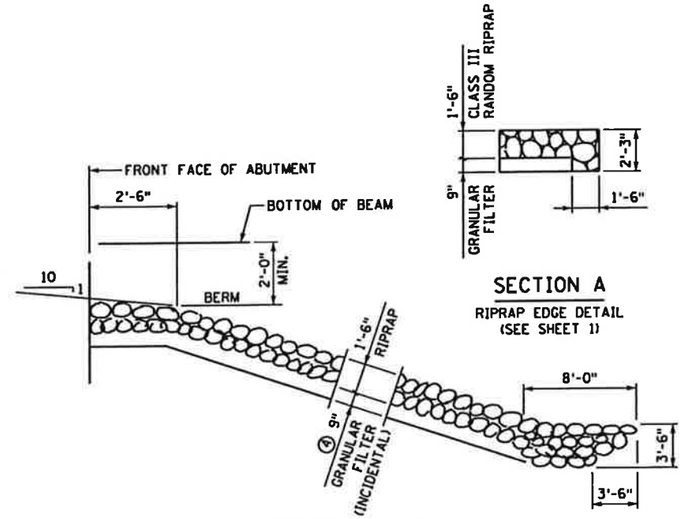

RIPRAP DETAIL

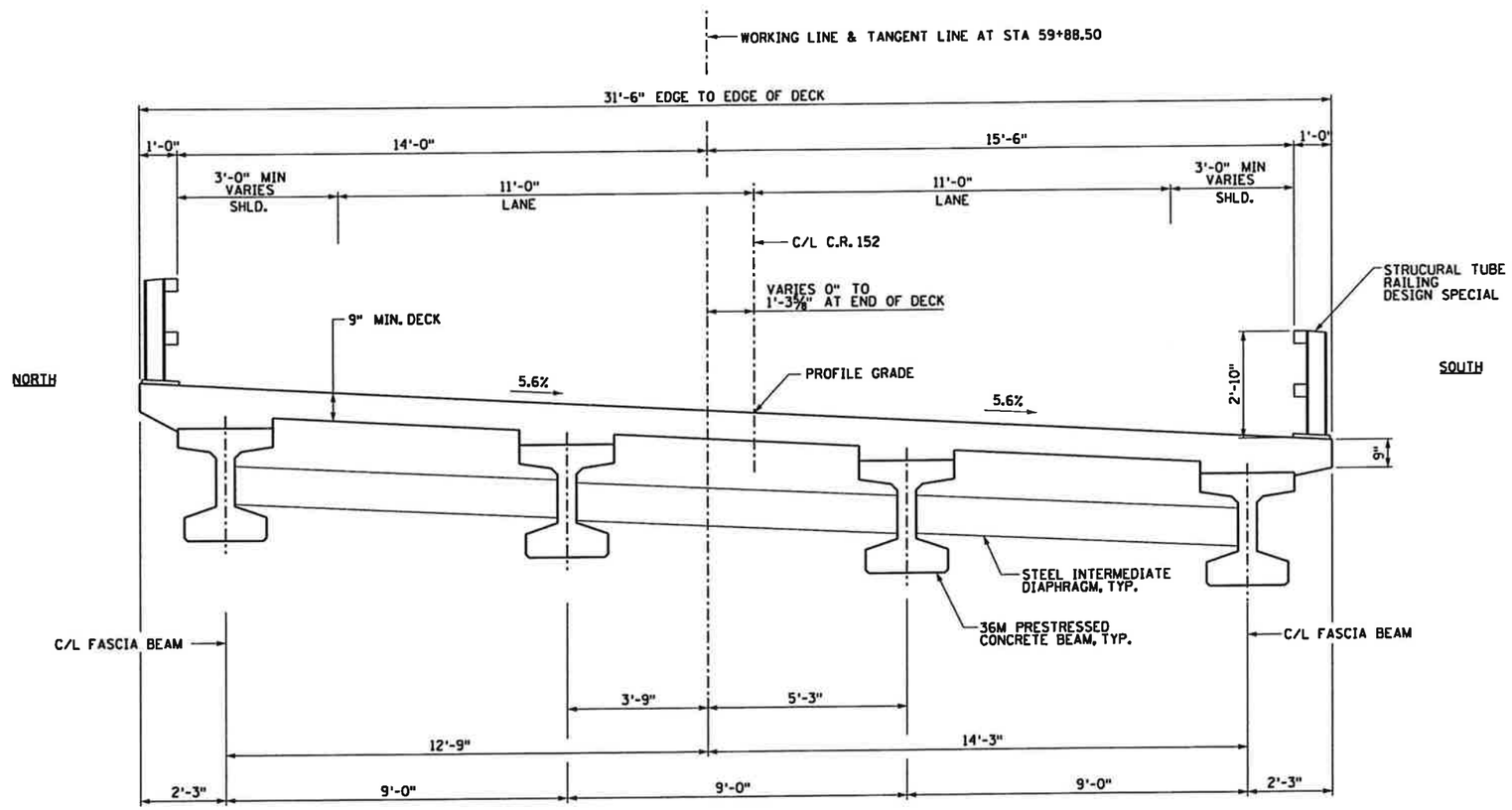

TYPICAL TRANSVERSE SECTION

SCHEDULE OF QUANTITIES FOR ENTIRE BRIDGE

	ITEM NO	ITEM	UNIT	QUANTITY
	2021.501	MOBILIZATION	LUMP SUM	1
	2401.501	STRUCTURAL CONCRETE (3Y43)	CU. YD.	75 (P)
	2401.512	BRIDGE SLAB CONCRETE (3Y33A)	SQ. FT.	2725 (P)
	2401.541	REINFORCEMENT BARS (EPOXY COATED)	POUND	21620 (P)
	2401.601	STRUCTURE EXCAVATION	LUMP SUM	1
	2401.601	SLOPE PREPARATION	LUMP SUM	1
①	2402.521	STRUCTURAL STEEL (3306)	POUND	480 (P)
②	2402.584	STRUCTURAL TUBE RAILING DESIGN SPECIAL	LIN. FT.	169 (P)
	2402.590	ELASTOMERIC BEARING PAD TYPE 1	EACH	8 (P)
	2405.502	PRESTRESSED CONCRETE BEAMS 36M	LIN. FT.	339 (P)
	2405.511	DIAPHRAGMS FOR TYPE 36M PREST BEAMS	LIN. FT.	27 (P)
	2452.507	C-I-P CONCRETE PILING DELIVERED 12"	LIN. FT.	500
	2452.508	C-I-P CONCRETE PILING DRIVEN 12"	LIN. FT.	500
	2452.519	C-I-P CONC TEST PILE 60 FT LONG 12"	EACH	2
	2452.602	PILE TIP PROTECTION 12"	EACH	12
	2502.601	DRAINAGE SYSTEM TYPE (B911)	LUMP SUM	1
③	2511.501	RANDOM RIPRAP CLASS III	CU. YD.	298

① INCLUDES PROTECTION PLATE FOR END OF SLAB.

② STRUCTURAL TUBE RAILING DESIGN IS A WISCONSIN DOT STANDARD TUBULAR METAL RAILING TYPE F. THIS RAILING MEETS NCHRP REPORT 350 EVALUATION CRITERIA FOR TEST LEVEL 2 (TL-2).

③ 9" GRANULAR FILTER IS INCLUDED IN PRICE BID FOR "RANDOM RIPRAP, CLASS III". APPROXIMATE QUANTITY IS 124 CU. YDS.

SEH
3535 VADNAIS CENTER DRIVE
ST PAUL, MN 55110
PHONE (651) 490-2000
FAX (651) 490-2150

I hereby certify that this plan, specification, or report was prepared by me or under my direct supervision and that I am a duly Licensed Professional Engineer under the laws of the state of Minnesota

Signature: Nathan C Klopp Date: 2-3-2010

Printed Name: NATHAN C KLOPP Reg. No. 43836

TITLE: BRIDGE QUANTITIES AND TYPICAL SECTION

SAP NO 07-598-26

DES: MAW	DR: MAW	APPROVED:
CHK: JAJ	CHK: JAJ	

SHEET NO B2 OF B21 SHEETS

BRIDGE NO 07557

S:\AE\B\Bluep\107252\5-dsgn\51-cadd\Cr152\bridge\cbr07557_bq1.dgn CR 152 2/3/2010 7:18:32 AM

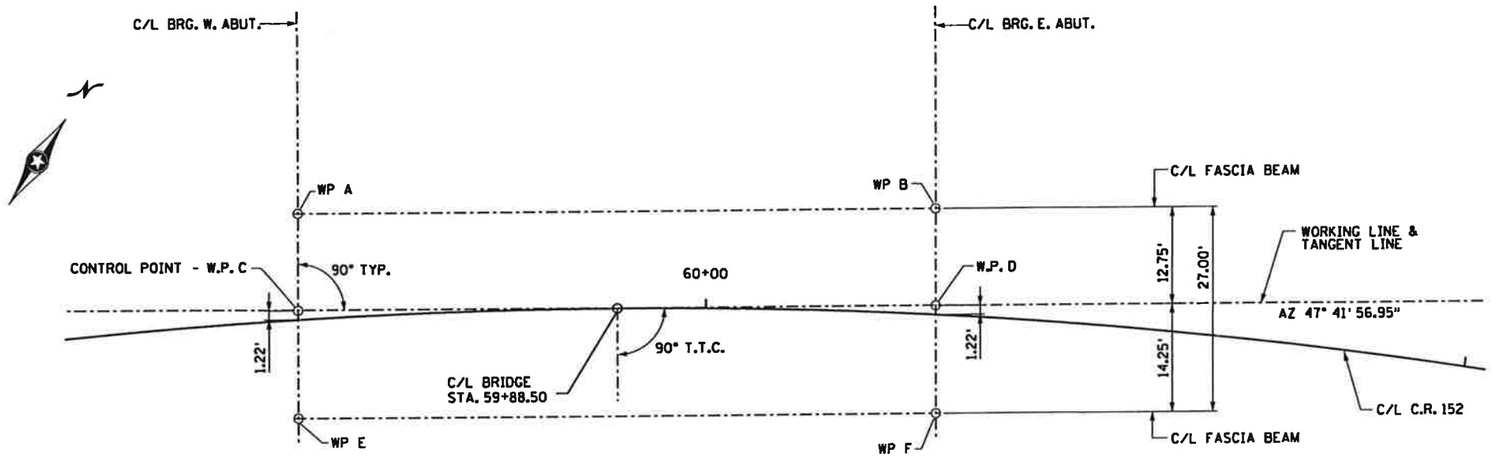

WORKING POINT LAYOUT

DIMENSIONS ARE SHOWN IN FEET

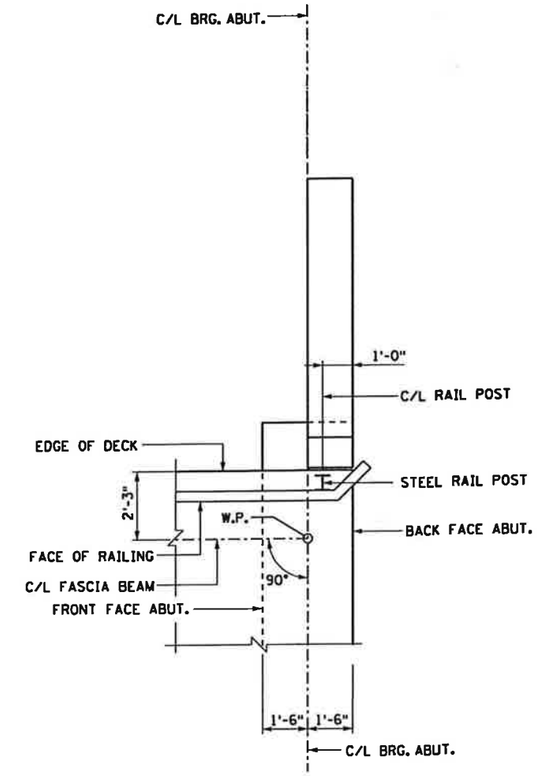

TYPICAL CORNER DETAIL

POINT NUMBER	DIMENSIONS BETWEEN WORKING POINTS										ELEVATIONS			
	POINT	STATION	X	Y	A	B	C	D	E	F	TOP OF SLAB	TOP OF SLAB TO BR SEAT	BRIDGE SEAT	POINT
	WP A	59+47.52	559218.422	119697.873		83.50	12.75	84.47	27.00	87.76	993.79	4.04	989.75	WP A
	WP B	60+29.48	559280.180	119754.071			84.47	12.75	87.76	27.00	993.46	4.04	989.42	WP B
	WP C	59+46.80	559227.003	119688.443				83.50	14.25	84.71	993.04	4.04	989.00	WP C
	WP D	60+30.20	559288.762	119744.641					84.71	14.25	992.70	4.04	988.66	WP D
	WP E	59+45.95	559236.594	119677.904						83.50	992.29	4.04	988.25	WP E
	WP F	60+31.05	559298.352	119734.101							991.95	4.04	987.91	WP F

ALL DISTANCES ARE ALONG STRAIGHT LINES BETWEEN WORKING POINTS AND ARE GIVEN IN DECIMALS OF A FOOT.

COORDINATES BASED ON BLUE EARTH COUNTY TRANSVERSE MERCATOR.

TOP OF ROADWAY TO BRIDGE SEAT		
	W. ABUT.	E. ABUT.
SLAB THICKNESS	9"	9"
STOOL HEIGHT	3"	3"
BEAM HEIGHT	36"	36"
BEARING HEIGHT	0.5"	0.5"
TOTAL (IN)	48.5"	48.5"
TOTAL (FT)	4.04'	4.04'

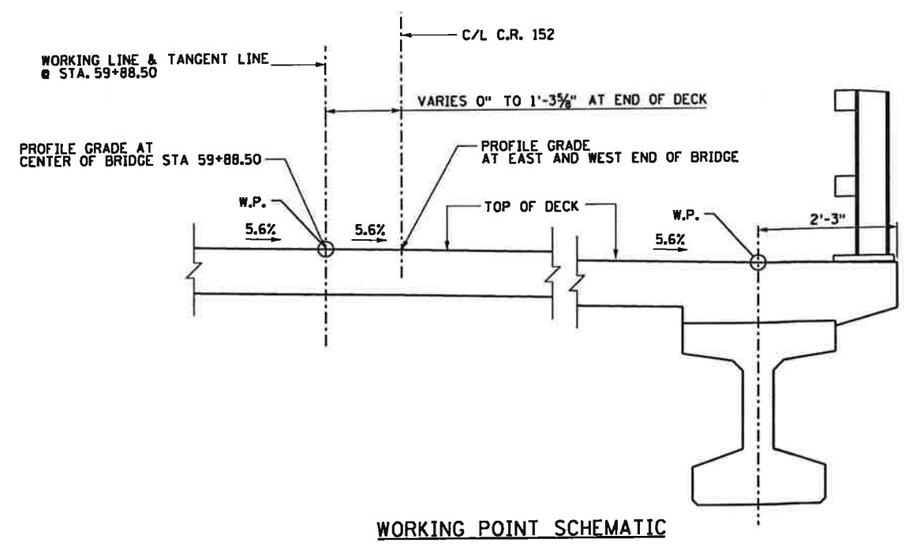

WORKING POINT SCHEMATIC

SEH
3535 VADNAIS CENTER DRIVE
ST PAUL, MN 55110
PHONE (651) 490-2000
FAX (651) 490-2150

I hereby certify that this plan, specification, or report was prepared by me or under my direct supervision and that I am a duly Licensed Professional Engineer under the laws of the state of Minnesota

Signature: Nathan C Klopp Date: 2-3-2010

Printed Name: NATHAN C KLOPP Reg. No. 43836

TITLE: BRIDGE LAYOUT

SAP NO 07-598-26

DES: MAW	DR: MAW	APPROVED:
CHK: JAJ	CHK: JAJ	

SHEET NO B3 OF B21 SHEETS

BRIDGE NO 07557

7:18:34 AM
2/3/2010
CR 152
S:\AE\B\Bluep\107252\5-dgn\Si-cadd\Cr152\bridge\cbr07557.wpl.dgn

WEST ABUTMENT REQUIRED NOMINAL PILE BEARING RESISTANCE R_n - Tons / Pile		
FIELD CONTROL METHOD	Φ_{dyn}	$*R_n$
Mn/DOT Nominal Resistance Formula	0.40	201
PDA	0.65	134

$*R_n$ = (Factored Design Load) / Φ_{dyn}

B.F.= BACK FACE
F.F.= FRONT FACE
E.F.= EACH FACE

WEST ABUTMENT COMPUTED PILE LOAD - TONS/PILE	
FACTORED DEAD LOAD + EARTH PRESSURE	47.6
FACTORED LIVE LOAD	32.8
*FACTORED DESIGN LOAD	80.4

*BASED ON STRENGTH I LOAD COMBINATION.

PILE NOTES

1 12" C-I-P- CONC. TEST PILE 60 FT. LONG
5 12" C-I-P CONCRETE PILES EST. LENGTH 50 FT.
6 12" C-I-P CONCRETE PILES REQ'D. FOR W. ABUT.

PILE SPACING SHOWN IS AT BOTTOM OF FOOTING.

FOR PILE SPLICE DETAILS SEE DETAIL B201.

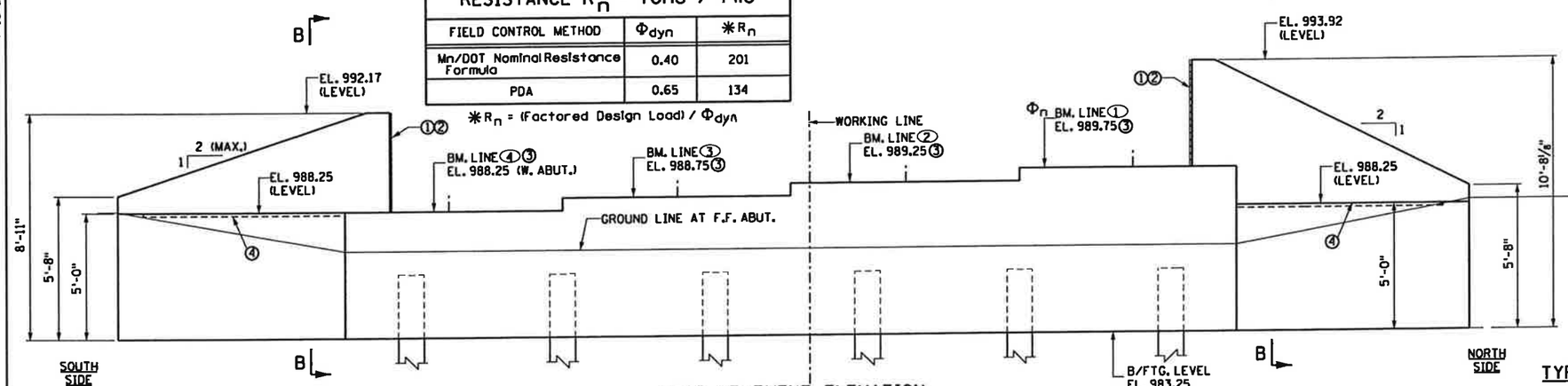

WEST ABUTMENT ELEVATION

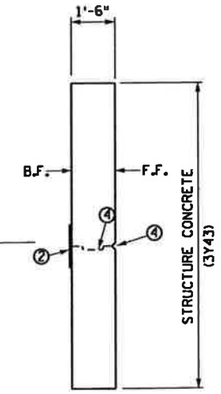

SECTION B-B
TYP SECTION THRU WINGWALL

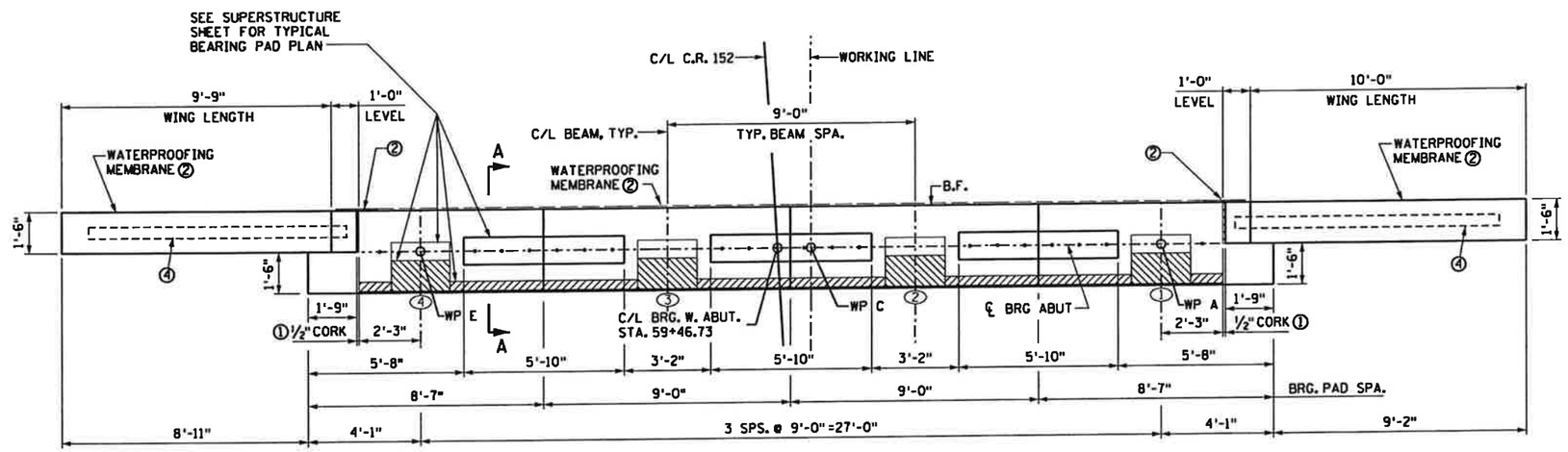

WEST ABUTMENT PLAN

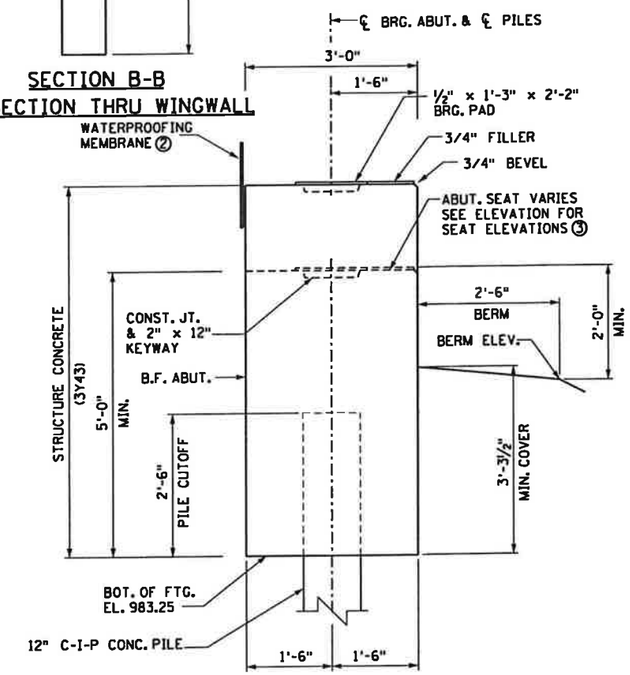

SECTION A-A
TYPICAL SECTION THRU BODY

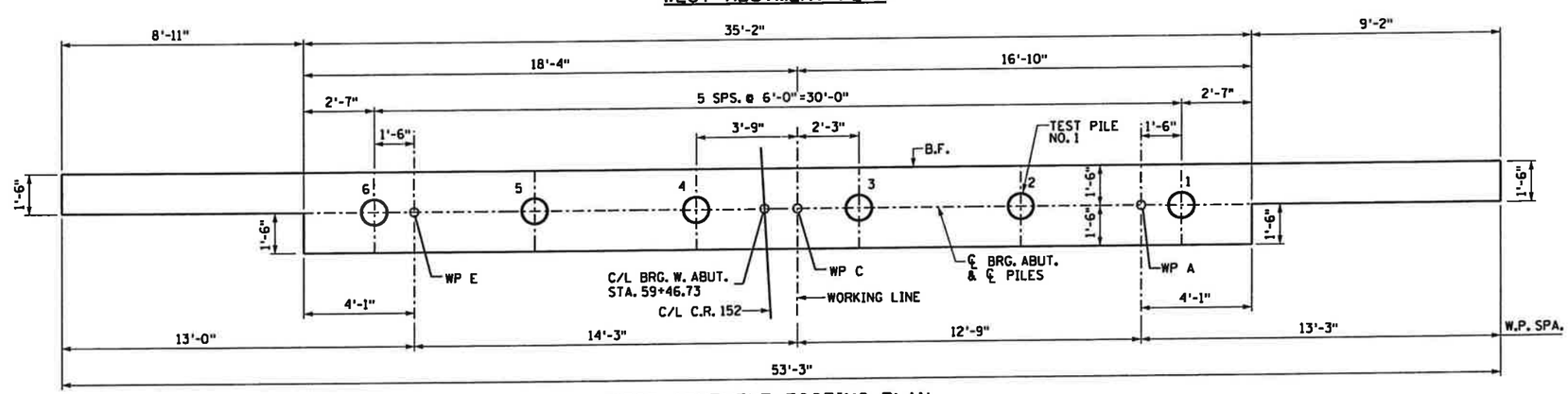

WEST ABUTMENT FOOTING PLAN

NOTES:

① ½" CORK & SEALER INCLUDED IN WING LENGTH. SEAL ALL EXPOSED HORIZONTAL AND VERICAL SURFACES OF JOINT CORK WITH NON-STAINING, GRAY, NON-ASPHALTIC JOINT SEALER. (1" DEEP AND HOLD ⅛" BELOW SURFACE OF CONCRETE).

② WATERPROOFING MEMBRANE SYSTEM TO EXTEND FROM BRIDGE SEAT TO TOP OF WING AND ACROSS SEAT AT BACK FACE AND ACROSS WING AT BACK FACE IF PERMISSIBLE CONST JT IS USED. SPLICE AT JUNCTION WITH HORIZ WATERPROOFING.

③ ELEVATIONS ARE TAKEN AT C/L ABUT BRG.

④ PERMMISSIBLE KEYED CONST JT FORMED BY A BEVELED 2 x 8. ¾" V-GROOVE ON FF WING WALL IF CONST JT IS USED.

SEE SHEET B8 FOR BAR LIST AND SUMMARY OF QUANTITIES.

⬭ DENOTES BEAM LINE.

SEH
3535 VADNAIS CENTER DRIVE
ST PAUL, MN 55110
PHONE (651) 490-2000
FAX (651) 490-2150

I hereby certify that this plan, specification, or report was prepared by me or under my direct supervision and that I am a duly Licensed Professional Engineer under the laws of the state of Minnesota

Signature: Nathan C. Klopp Date: 2-3-2010
Printed Name: NATHAN C KLOPP Reg. No. 43836

TITLE: WEST ABUTMENT

SAP NO 07-598-26

DES: NCK	DR: MAW	APPROVED:	BRIDGE NO 07557
CHK: JAJ	CHK: NCK		
SHEET NO B4 OF B21 SHEETS			

7:18:36 AM
CR 152 2/3/2010
S:\AE\B\Bluep\107252\5-dgn\51-cadd\Cr152\bridge\cbr07557_w1.dgn

B.F.= BACK FACE
F.F.= FRONT FACE
E.F.= EACH FACE

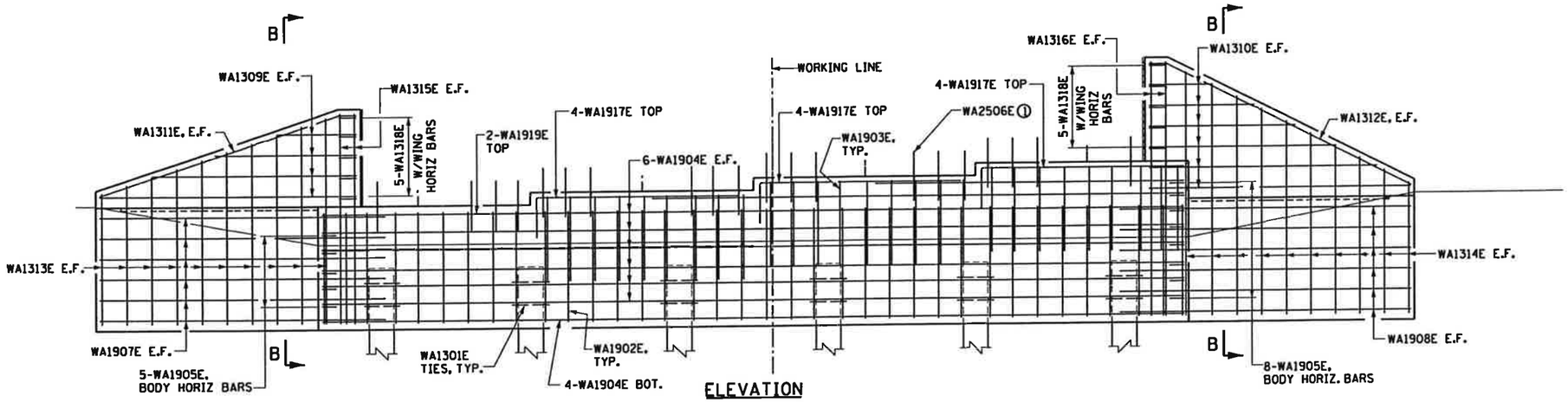

ELEVATION

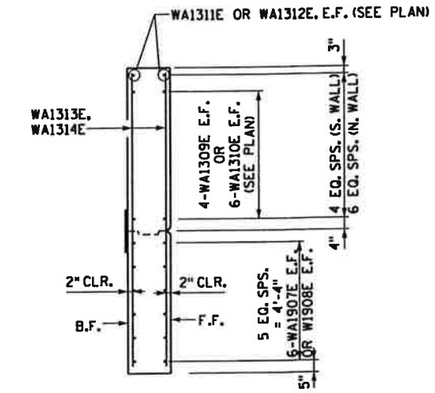

SECTION B-B
TYP SECTION THRU WINGWALL

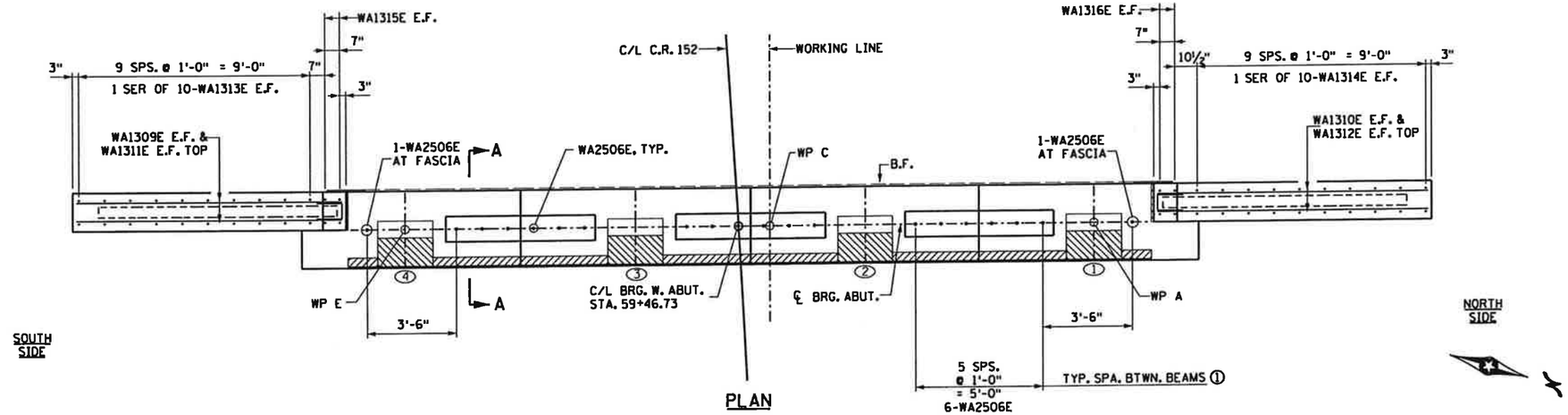

PLAN

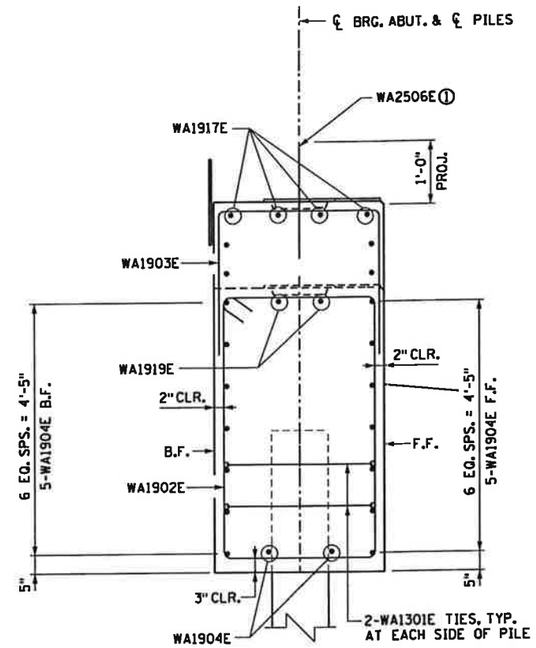

SECTION A-A
TYPICAL SECTION THRU BODY

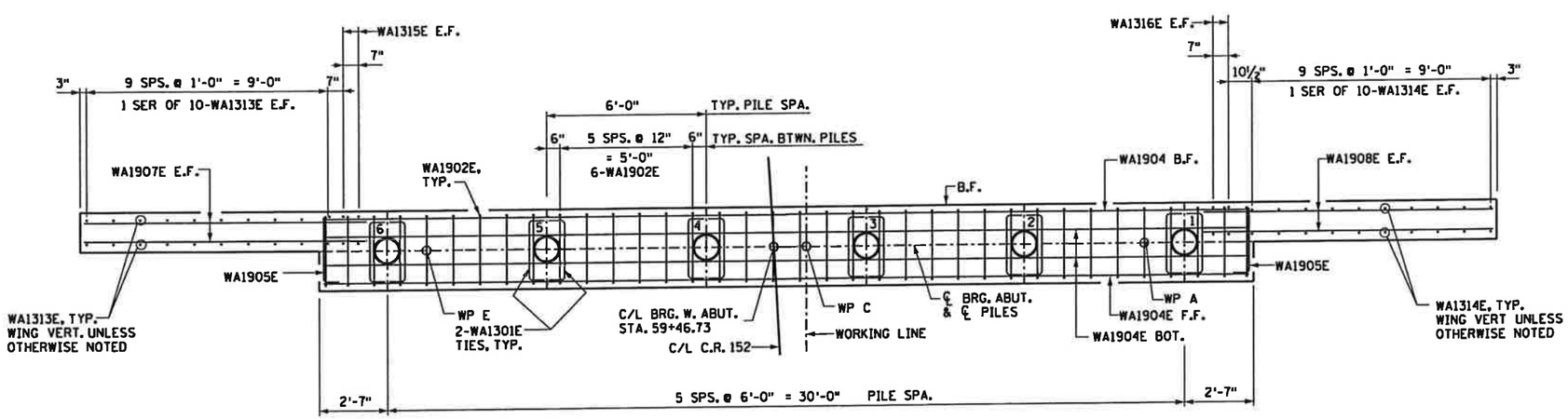

FOOTING PLAN

NOTES:

SEE SHEET B8 FOR BAR LIST AND SUMMARY OF QUANTITIES.

① THESE BARS MAY BE PLACED AFTER CONCRETE IS PLACED BUT BEFORE INITIAL SET HAS TAKEN PLACE.

SEH
3535 VADNAIS CENTER DRIVE
ST PAUL, MN 55110
PHONE (651) 490-2000
FAX (651) 490-2150

I hereby certify that this plan, specification, or report was prepared by me or under my direct supervision and that I am a duly Licensed Professional Engineer under the laws of the state of Minnesota

Signature: Nathan C Klopp Date: 2-3-2010
Printed Name: NATHAN C KLOPP Reg. No. 43836

TITLE: WEST ABUTMENT REINFORCEMENT

SAP NO 07-598-26

DES: NCK	DR: MAW	APPROVED:
CHK: JAJ	CHK: NCK	

SHEET NO B5 OF B21 SHEETS

BRIDGE NO 07557

7:18:39 AM 2/3/2010 CR 152
S:\AE\B\Bluep\107252\5-dsgn\51-cadd\Cr152\bridge\cbr07557_w2.dgn

B.F.= BACK FACE
F.F.= FRONT FACE
E.F.= EACH FACE

WEST ABUTMENT REQUIRED NOMINAL PILE BEARING RESISTANCE R_n - Tons / Pile		
FIELD CONTROL METHOD	Φ_{dyn}	$*R_n$
Mn/DOT Nominal Resistance Formula	0.40	201
PDA	0.65	134

$*R_n$ = (Factored Design Load) / Φ_{dyn}

WEST ABUTMENT COMPUTED PILE LOAD - TONS/PILE	
FACTORED DEAD LOAD + EARTH PRESSURE	47.6
FACTORED LIVE LOAD	32.8
*FACTORED DESIGN LOAD	80.4

*BASED ON STRENGTH I LOAD COMBINATION.

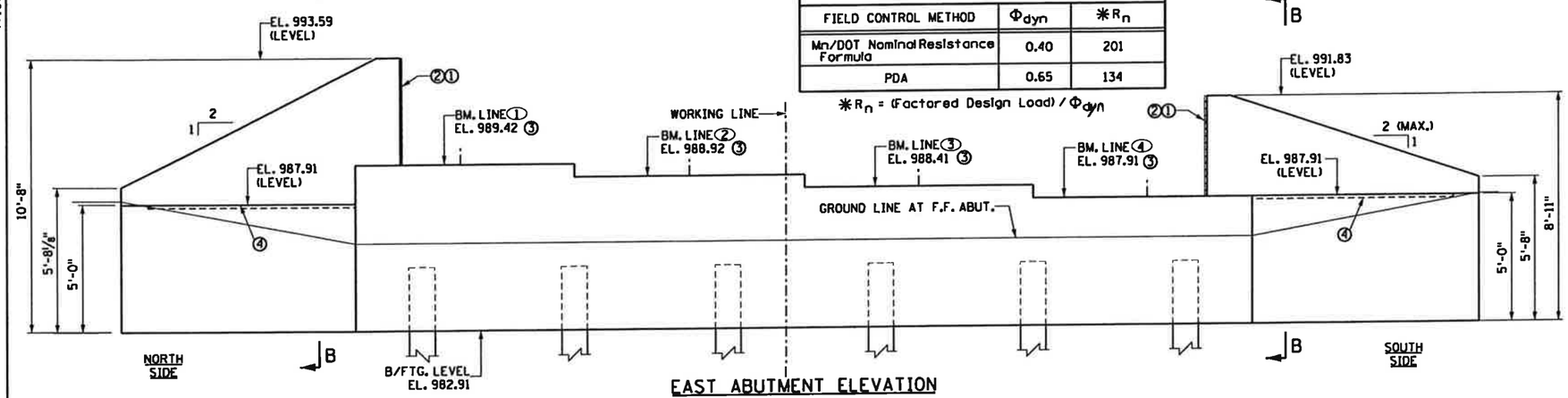

EAST ABUTMENT ELEVATION

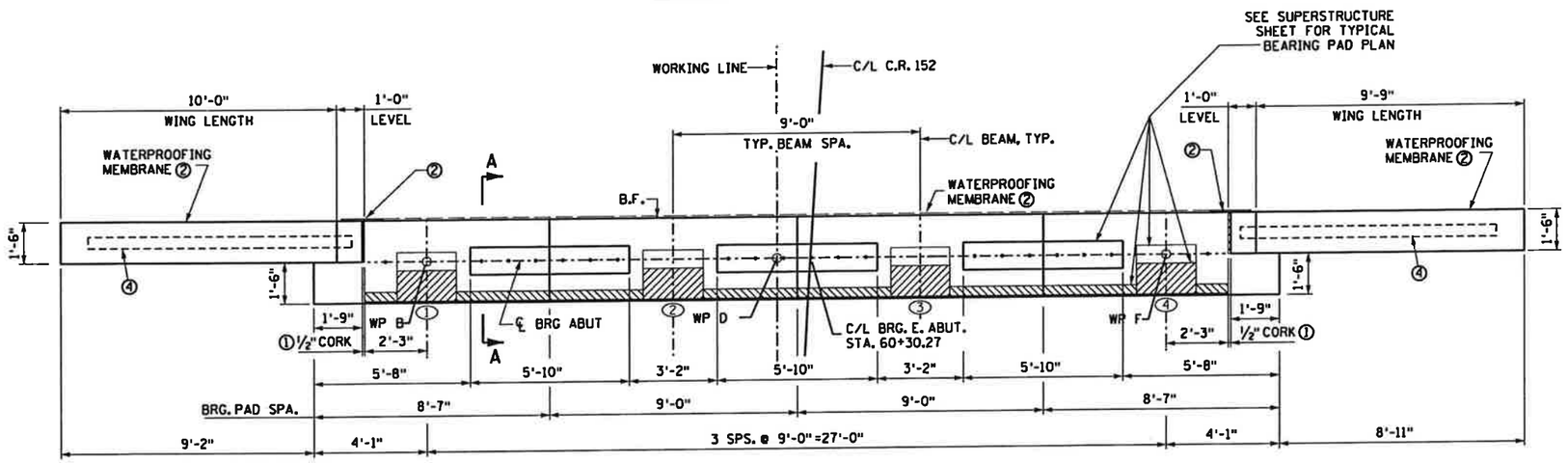

EAST ABUTMENT PLAN

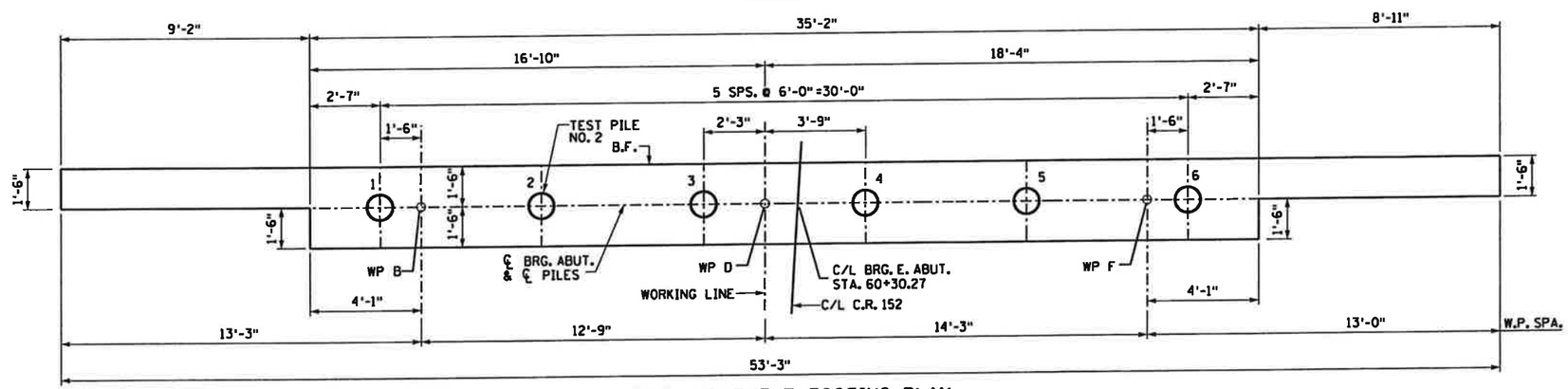

EAST ABUTMENT FOOTING PLAN

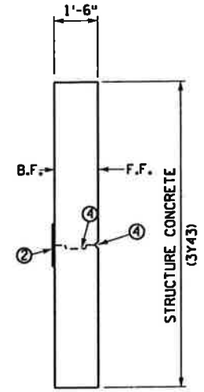

SECTION B-B TYP
SECTION THRU WINGWALL

PILE NOTES

1 12" C-I-P- CONC. TEST PILE 60 FT. LONG
5 12" C-I-P CONCRETE PILES EST. LENGTH 50 FT.
6 12" C-I-P CONCRETE PILES REQ'D. FOR W. ABUT.

PILE SPACING SHOWN IS AT BOTTOM OF FOOTING.

FOR PILE SPLICE DETAILS SEE DETAIL B201.

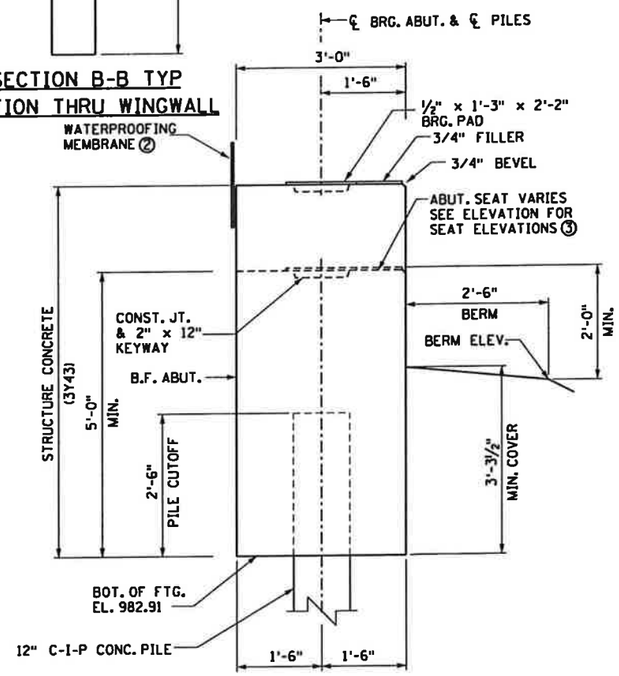

SECTION A-A
TYPICAL SECTION THRU BODY

NOTES:

1. 1/2" CORK & SEALER INCLUDED IN WING LENGTH. SEAL ALL EXPOSED HORIZONTAL AND VERICAL SURFACES OF JOINT CORK WITH NON-STAINING, GRAY, NON-ASPHALTIC JOINT SEALER. (1" DEEP AND HOLD 1/8" BELOW SURFACE OF CONCRETE).
2. WATERPROOFING MEMBRANE SYSTEM TO EXTEND FROM BRIDGE SEAT TO TOP OF WING AND ACROSS SEAT AT BACK FACE AND ACROSS WING AT BACK FACE IF PERMISSIBLE CONST JT IS USED. SPLICE AT JUNCTION WITH HORIZ WATERPROOFING.
3. ELEVATIONS ARE TAKEN AT C/L ABUT BRG.
4. PERMMISSIBLE KEYED CONST JT FORMED BY A BEVELED 2 x 8. 3/4" V-GROOVE ON FF WING WALL IF CONST JT IS USED.

SEE SHEET B8 FOR BAR LIST AND SUMMARY OF QUANTITIES.

◯ DENOTES BEAM LINE.

SEH
3535 VADNAIS CENTER DRIVE
ST PAUL, MN 55110
PHONE (651) 490-2000
FAX (651) 490-2150

I hereby certify that this plan, specification, or report was prepared by me or under my direct supervision and that I am a duly Licensed Professional Engineer under the laws of the state of Minnesota
Signature: Nathan C Klopp Date: 2-3-2010
Printed Name: NATHAN C KLOPP Reg. No. 43836

TITLE: EAST ABUTMENT

SAP NO 07-598-26

DES: NCK	DR: MAW	APPROVED:
CHK: JAJ	CHK: NCK	

SHEET NO B6 OF B21 SHEETS

BRIDGE NO 07557

7:18:41 AM
CR 152 2/3/2010
S:\AE&B\Bluep\107252\5-dgn\51-coddd\Cr152\bridge\cbr07557_a1.dgn

BACK FACE =B.F.
FRONT FACE =F.F.
EACH FACE =E.F.

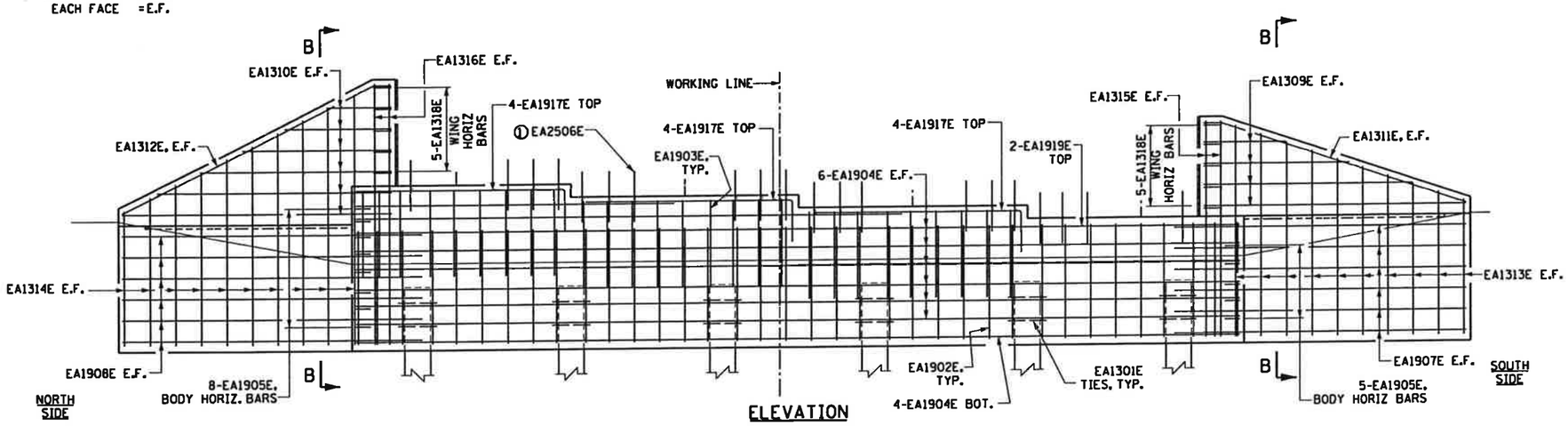

ELEVATION

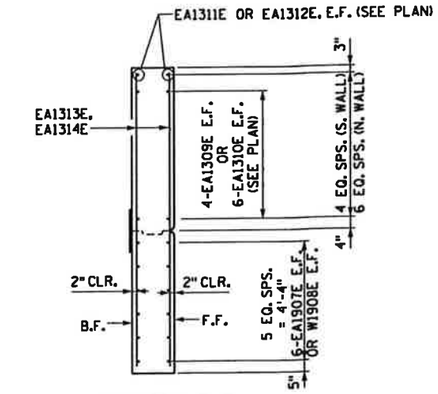

SECTION B-B
TYP SECTION THRU WINGWALL

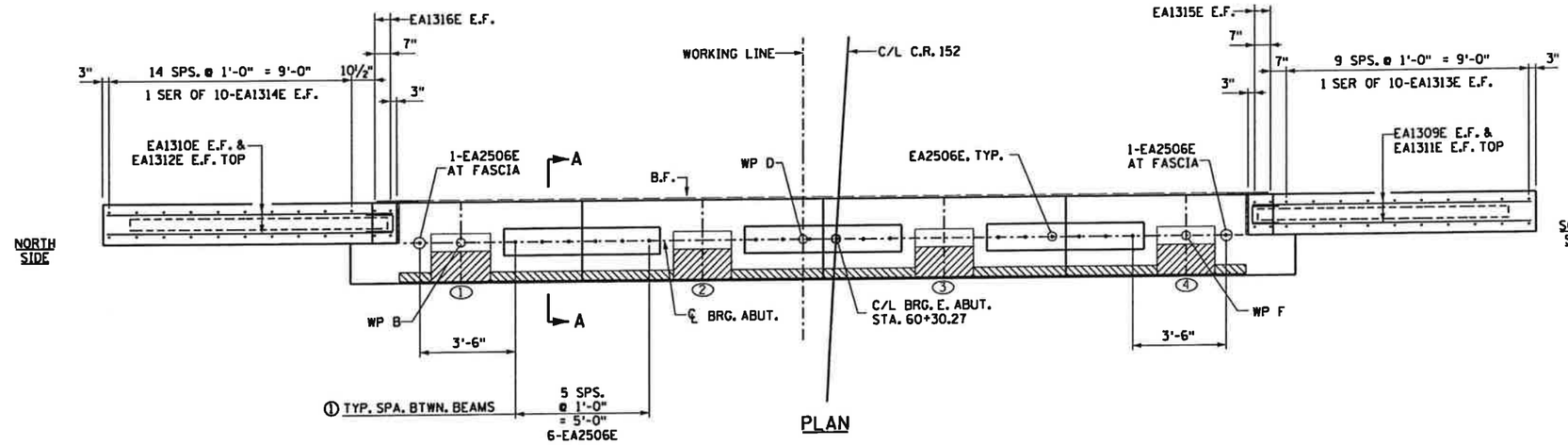

PLAN

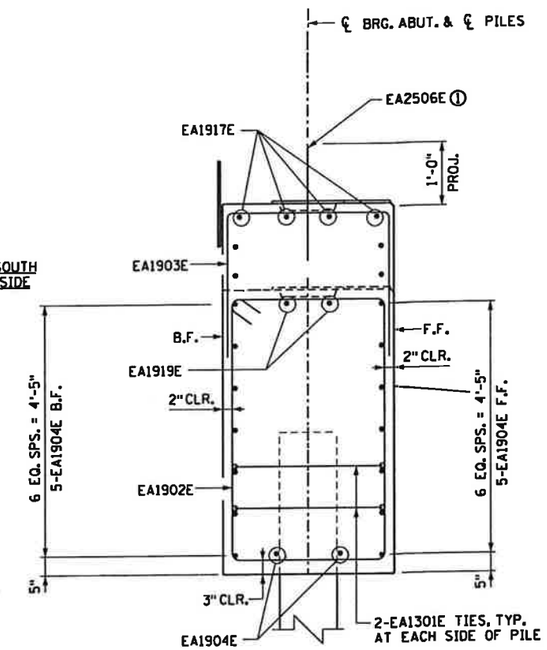

SECTION A-A
TYPICAL SECTION THRU BODY

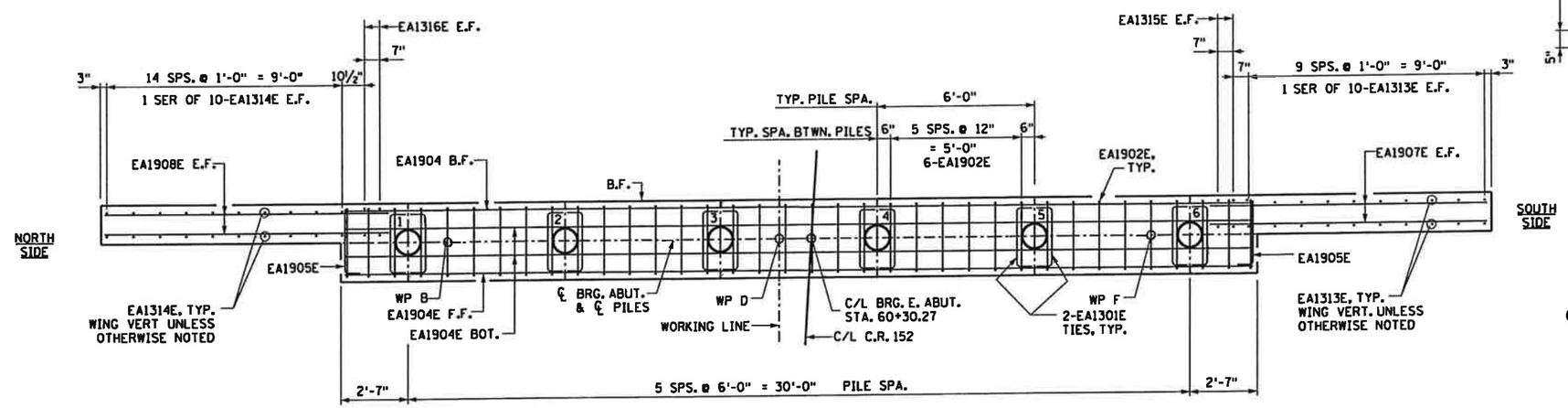

FOOTING PLAN

NOTES:

SEE SHEET B8 FOR BAR LIST AND SUMMARY OF QUANTITIES.

① THESE BARS MAY BE PLACED AFTER CONCRETE IS PLACED BUT BEFORE INITIAL SET HAS TAKEN PLACE.

SEH
3535 VADNAIS CENTER DRIVE
ST PAUL, MN 55110
PHONE (651) 490-2000
FAX (651) 490-2150

I hereby certify that this plan, specification, or report was prepared by me or under my direct supervision and that I am a duly Licensed Professional Engineer under the laws of the state of Minnesota

Signature: Nathan C Klopp Date: 2-3-2010
Printed Name: NATHAN C KLOPP Reg. No. 43836

TITLE: EAST ABUTMENT REINFORCEMENT

SAP NO 07-598-26

DES: NCK	DR: MAW	APPROVED:
CHK: JAJ	CHK: NCK	

SHEET NO B7 OF B21 SHEETS

BRIDGE NO 07557

S:\AE\B\Bluep\107252\5-dsgn\51-cadd\Cr152\bridge\cbr07557_e2.dgn
CR 152
2/3/2010
7:18:44 AM

BAR MARK	NO. OF BARS	LENGTH	SHAPE	LOCATION
WEST ABUTMENT EPOXY COATED BARS				
WA1301E	24	3'-10"	BENT	PILE TIES
WA1902E	36	15'-5"	BENT	BODY STIRRUP
WA1903E	27	9'-6"	BENT	BODY TIE
WA1904E	12	34'-10"	STR	BODY HORIZ.
WA1905E	13	9'-6"	BENT	BODY ENDS
WA2506E	20	2'-0"	STR	BODY DOWELS
WA1907E	12	11'-6"	STR	WING HORIZ. E.F.
WA1908E	12	12'-0"	STR	WING HORIZ. E.F.
WA1309E	2 SERIES OF 4	3'-3" TO 10'-4"	STR	WING HORIZ. E.F.
WA1310E	2 SERIES OF 6	2'-7" TO 10'-8"	STR	WING HORIZ. E.F.
WA1311E	2	11'-0"	BENT	WING TOP
WA1312E	2	11'-9"	BENT	WING TOP
WA1313E	2 SERIES OF 9	5'-4" TO 8'-4"	STR	WING VERT.
WA1314E	2 SERIES OF 10	5'-4" TO 9'-10"	STR	WING VERT.
WA1315E	4	8'-6"	STR	WING VERT.
WA1316E	4	10'-3"	STR	WING VERT.
WA1917E	12	9'-2"	BENT	BODY HORIZ. TOP
WA1318E	10	3'-0"	BENT	WING HORIZ.
WA1919E	2	12'-0"	STR	BODY HORIZ. TOP

BAR MARK	NO. OF BARS	LENGTH	SHAPE	LOCATION
EAST ABUTMENT EPOXY COATED BARS				
EA1301E	24	3'-10"	BENT	PILE TIES
EA1902E	36	15'-5"	BENT	BODY STIRRUP
EA1903E	27	9'-6"	BENT	BODY TIE
EA1904E	12	34'-10"	STR	BODY HORIZ.
EA1905E	13	9'-6"	BENT	BODY ENDS
EA2506E	20	2'-0"	STR	BODY DOWELS
EA1907E	12	11'-6"	STR	WING HORIZ. E.F.
EA1908E	12	12'-0"	STR	WING HORIZ. E.F.
EA1309E	2 SERIES OF 4	3'-3" TO 10'-4"	STR	WING HORIZ. E.F.
EA1310E	2 SERIES OF 6	2'-7" TO 10'-8"	STR	WING HORIZ. E.F.
EA1311E	2	11'-0"	BENT	WING TOP
EA1312E	2	11'-9"	BENT	WING TOP
EA1313E	2 SERIES OF 9	5'-4" TO 8'-4"	STR	WING VERT.
EA1314E	2 SERIES OF 10	5'-4" TO 9'-10"	STR	WING VERT.
EA1315E	4	8'-6"	STR	WING VERT.
EA1316E	4	10'-3"	STR	WING VERT.
EA1917E	12	9'-2"	BENT	BODY HORIZ. TOP
EA1318E	10	3'-0"	BENT	WING HORIZ.
EA1919E	2	12'-0"	STR	BODY HORIZ. TOP

SUMMARY OF QUANTITIES WEST & EAST ABUTMENTS

	UNIT	W ABUT	E ABUT	TOTAL
STRUCTURAL CONCRETE (3Y43)	CU. YD.	29	29	58
REINFORCEMENT BARS (EPOXY COATED)	POUND	3200	3200	6400
① STRUCTURE EXCAVATION	LUMP SUM	0.5	0.5	1
② C-I-P CONCRETE PILING DELIVERED 12"	LIN. FT.	250	250	500
② C-I-P CONCRETE PILING DRIVEN 12"	LIN. FT.	250	250	500
C-I-P CONC TEST PILE 60 FT LONG 12"	EACH	1	1	2
PILE TIP PROTECTION 12"	EACH	6	6	12

① SEE SPECIAL PROVISIONS.

② DOES NOT INCLUDE TEST PILES.

BAR BENDING DIAGRAMS

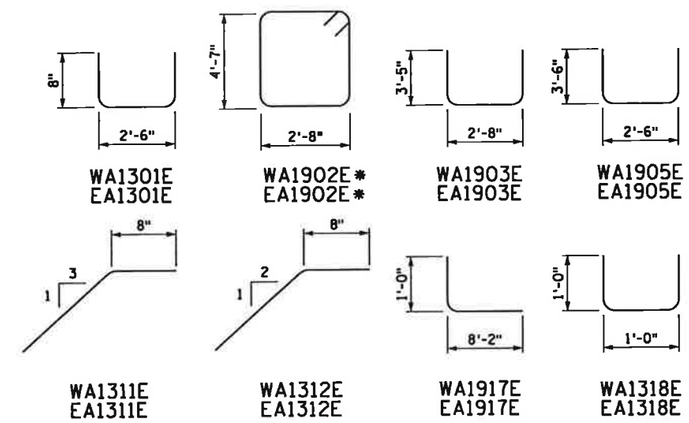

* BAR TYPE USES STANDARD STIRRUP AND TIE HOOKS.

NOTE:
BENT BAR DIMENSIONS GIVEN ARE OUT-TO-OUT. ACTUAL BAR LENGTHS SHALL BE DETERMINED BASED ON DIMENSIONS SHOWN IN THE BAR BENDING DIAGRAMS. TOTAL BAR LENGTHS SHOWN ARE FOR USE IN COMPUTING REINFORCEMENT BAR WEIGHTS FOR PAYMENT ONLY.

SEH
3535 VADNAIS CENTER DRIVE
ST PAUL, MN 55110
PHONE (651) 490-2000
FAX (651) 490-2150

I hereby certify that this plan, specification, or report was prepared by me or under my direct supervision and that I am a duly Licensed Professional Engineer under the laws of the state of Minnesota

Signature: Nathan C Klopp Date: 2-3-2010

Printed Name: NATHAN C KLOPP Reg. No. 43836

TITLE: ABUTMENT BAR LISTS AND QUANTITIES

SAP NO 07-598-26

DES: MAW	DR: MAW	APPROVED:
CHK: NCK	CHK: NCK	

SHEET NO B8 OF B21 SHEETS

BRIDGE NO 07557

S:\AE\B\B1\uego\107252\5-dgn\51-cadd\Cr152\bridge\cbr07557_ab.dgn CR 152 2/3/2010 7:18:46 AM

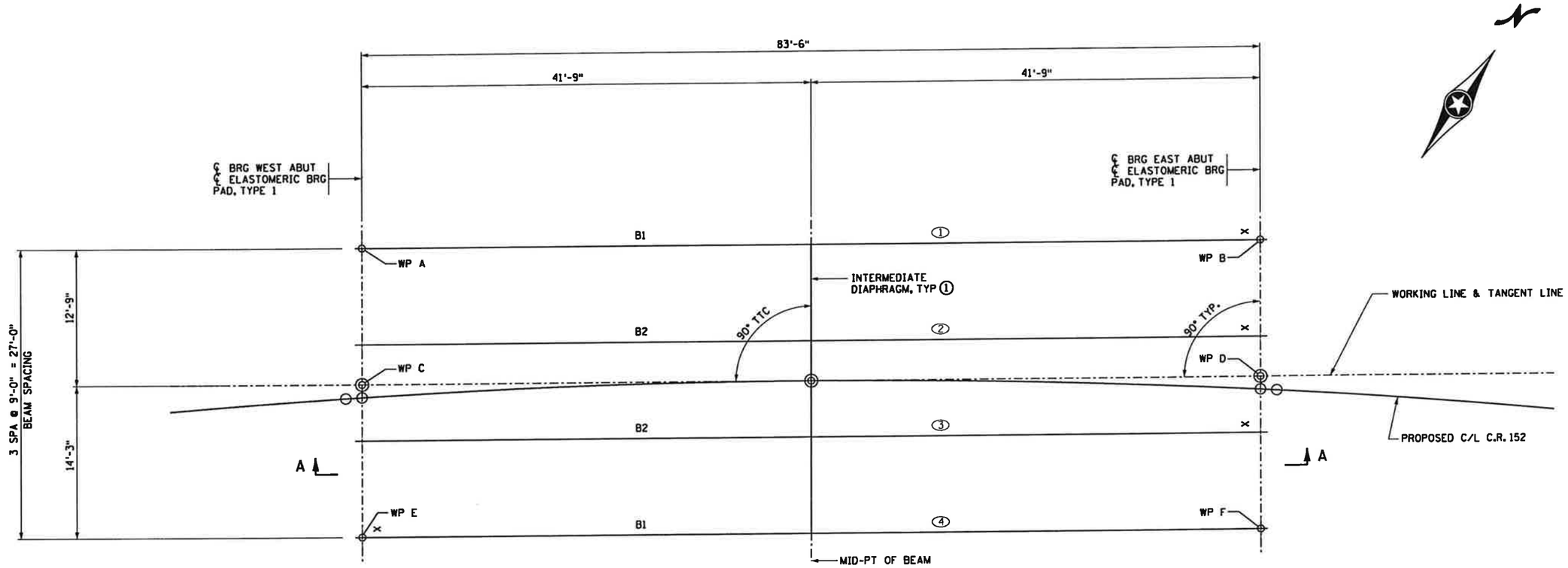

FRAMING PLAN

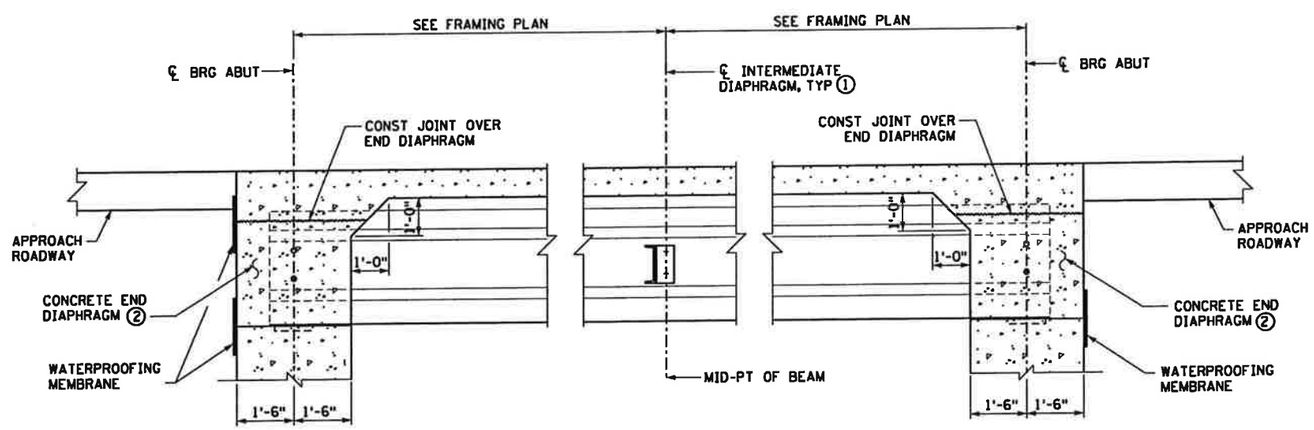

WEST ABUTMENT
(FIXED)

EAST ABUTMENT
(FIXED)

LONGITUDINAL SECTION A-A

NOTES:

SEE SHEET B10 FOR BEAM DETAILS. BEAMS SHALL HAVE ONE END MARKED "X" AS SHOWN.

"X" DENOTES END OF BEAM.
⬭ DENOTES BEAM LINE.

ALL DIMENSIONS SHOWN, UNLESS NOTED OTHERWISE ARE MEASURED ON A HORIZONTAL PLANE.

① SEE SHEET B17 FOR INTERMEDIATE DIAPHRAGM DETAIL B403.

② END DIAPHRAGMS AT ABUTMENTS, PAID FOR AS STRUCTURAL CONCRETE (3Y43 PER CY). SEE SUPERSTRUCTURE SHEETS AND B811.

SEH
3535 VADNAIS CENTER DRIVE
ST PAUL, MN 55110
PHONE (651) 490-2000
FAX (651) 490-2150

I hereby certify that this plan, specification, or report was prepared by me or under my direct supervision and that I am a duly Licensed Professional Engineer under the laws of the state of Minnesota

Signature: Nathan C Klopp Date: 2-3-2010
Printed Name: NATHAN C KLOPP Reg. No. 43836

TITLE: FRAMING PLAN

SAP NO 07-598-26

DES: NCK	DR: DLF	APPROVED:	BRIDGE NO
CHK: JAJ	CHK: NCK		07557
SHEET NO B9 OF B21 SHEETS			

S:\AE\B\Bluebo\107252\5-dsgn\51-cadd\Cr152\bridge\cbr07557.fpl.dgn CR 152 2/3/2010 7:18:47 AM

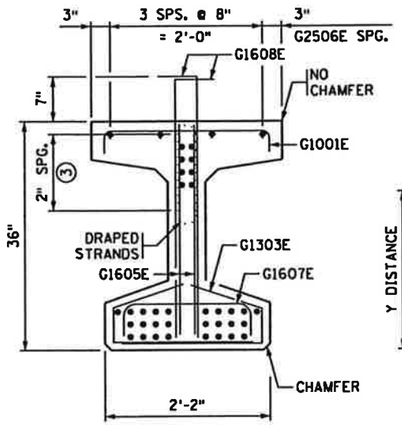

END VIEW

CUT STRANDS FLUSH WITH CONCRETE. PAINT ENDS WITH AN APPROVED GRAY EPOXY EXCEPT AS NOTED.

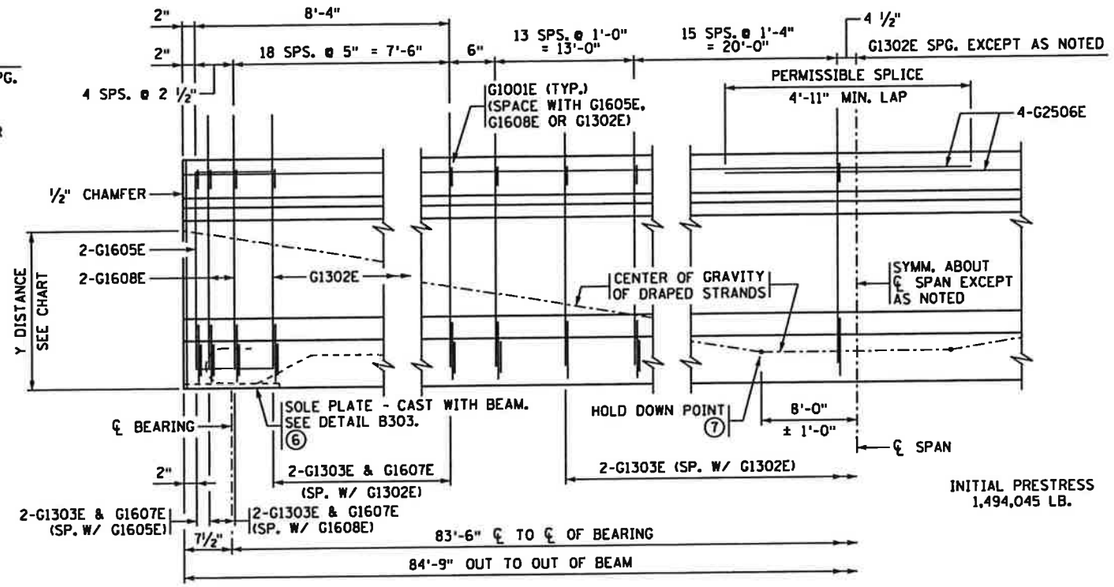

INITIAL PRESTRESS 1,494,045 LB.

BEAM ELEVATION

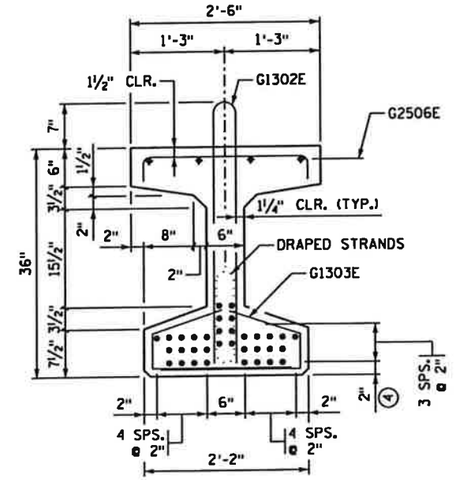

SECTION AT ℄ SPAN

Y DISTANCES (IN INCHES)			
	NO.	℄ SPAN	END
STRAIGHT STRANDS	26	4.15	
DRAPED STRANDS	8	7	30 ▫
TOTAL STRANDS	34	4.82	

Y = DISTANCE TO CENTER OF GRAVITY OF STRANDS FROM BOTTOM OF BEAM. ALL STRANDS SPACED 2" CENTER TO CENTER, HORIZONTALLY AND VERTICALLY, EXCEPT AS NOTED.

▫ A TOLERANCE OF ± 1" WILL BE PERMITTED IN THIS DIMENSION.

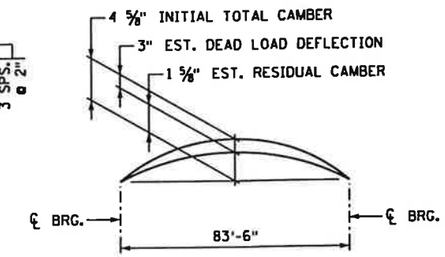

CAMBER DIAGRAM

INITIAL CAMBER IS GIVEN AFTER DIAPHRAGMS ARE IN PLACE.

DEAD LOAD DEFLECTION SHOWN IS FOR WEIGHT OF SLAB, WEARING COURSE, RAILING, SIDEWALK AND MEDIAN WHERE APPLICABLE.

ENGINEER WILL TAKE ELEVATIONS AT TOP OF BEAMS AFTER ERECTION AND WILL ALLOW FOR DEFLECTION SHOWN TO ENABLE CONTRACTOR TO BUILD FORMS TO CORRECT GRADE AND SPECIFIED SLAB THICKNESS.

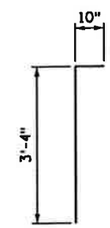

G1608E

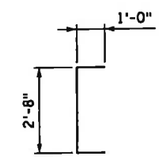

G1605E

CALCULATED PRESTRESS LOSSES	
ELASTIC SHORTENING LOSS	24.02 KSI
LONG TERM LOSSES	24.20 KSI

MINIMUM CONCRETE STRENGTH - P.S.I.	
① f'cI	② f'c
7,500	8,000

PRESTRESSING STRAND DIAMETER	
⑤	½" ☐
⑤	0.60" ☒

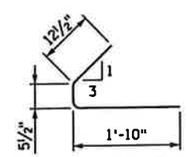

G1303E

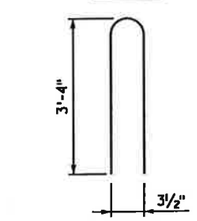

G1302E

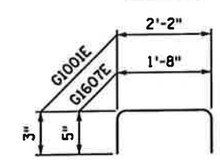

G1001E & G1607E

GENERAL NOTES

TOPS OF BEAMS SHALL BE ROUGH FLOATED AND BROOMED TRANSVERSELY FOR BOND.

PROVIDE HANDLING HOOKS OR DEVICES AS REQUIRED BY CONTRACTOR.

EACH BEAM SHALL BE MARKED, SHOWING BRIDGE NUMBER, CASTING DATE, AND INDIVIDUAL IDENTIFICATION LETTERS AND NUMBERS. MARKINGS SHALL BE MADE ON THE FACE OF THE BEAM, NEAR THE END, SO LOCATED THAT THEY WILL BE EXPOSED AFTER THE END DIAPHRAGMS HAVE BEEN CAST. FASCIA BEAMS SHALL BE MARKED ON THE INSIDE FACE. ALL MARKINGS SHALL BE STENCILLED AND BE CLEARLY LEGIBLE. FOR LOCATION OF BEAMS, SEE FRAMING PLAN.

ALL MATERIAL AND WORK SHOWN OR NOTED ON THIS SHEET SHALL BE INCLUDED IN UNIT PRICE BID FOR PRESTRESSED CONCRETE BEAMS. SEE Mn/DOT SPEC. 2405.

SEE FRAMING PLAN FOR BEAM END MARKED "X" AND DIAPHRAGM SPACING.

APPROXIMATE WEIGHT OF BEAM IS 26.0 TONS.

AS AN ALTERNATE TO THE DIAPHRAGM ANCHORAGES SHOWN, THE CONTRACTOR MAY SUBMIT DETAILS OF A CAST-IN-PLACE ANCHORAGE TO THE ENGINEER FOR APPROVAL. ANCHORAGE MUST PROVIDE AN ULTIMATE PULL OUT STRENGTH OF 15 KIPS PER ANCHORAGE.

① MINIMUM CONCRETE STRENGTH AT TIME OF PRESTRESS TRANSFER.

② MINIMUM CONCRETE STRENGTH WHEN BEAM CAN BE TRANSPORTED AND INSTALLED.

③ DRAPED STRANDS.

④ STRAIGHT STRANDS.

⑤ PRESTRESSING STRANDS SHALL BE 7-WIRE LOW RELAXATION STRAND, CONFORMING TO ASTM A416, GRADE 270.

⑥ FOR INTEGRAL ABUTMENT, SOLE PLATE CAN BE ELIMINATED OR REPLACED WITH AN APPROVED PROTECTION PLATE.

⑦ CENTER OF GRAVITY OF HOLD DOWNS WHEN MULTIPLE HOLD DOWNS ARE USED.

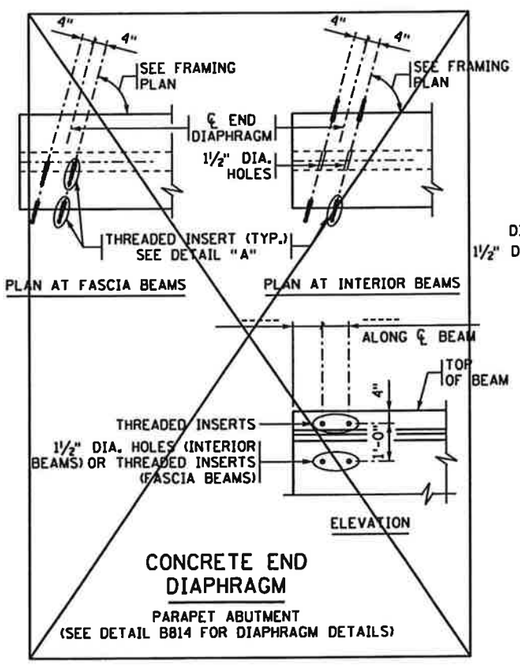

CONCRETE END DIAPHRAGM

PARAPET ABUTMENT
(SEE DETAIL B814 FOR DIAPHRAGM DETAILS)

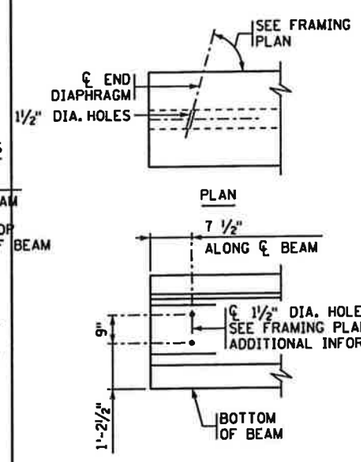

CONCRETE END DIAPHRAGM

INTEGRAL ABUTMENT
(SEE B815 FOR DIAPHRAGM DETAILS)

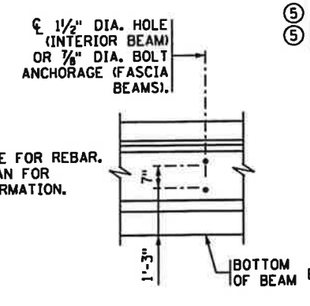

STEEL INTERMEDIATE DIAPHRAGM

(SEE DETAIL B403 FOR DIAPHRAGM DETAILS)

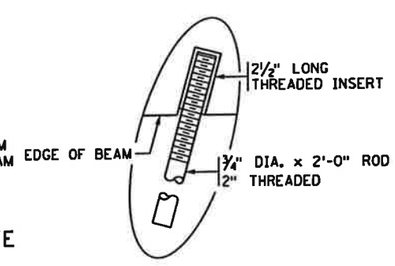

DETAIL "A"

REVISED: 04-22-2009

APPROVED: OCTOBER 26, 2005

STATE BRIDGE ENGINEER

SEH
3535 VADNAIS CENTER DRIVE
ST PAUL, MN 55110
PHONE (651) 490-2000
FAX (651) 490-2150

I hereby certify that this plan, specification, or report was prepared by me or under my direct supervision and that I am a duly Licensed Professional Engineer under the laws of the state of Minnesota

Signature: Nathan C. Klopp Date: 2-3-2010

Printed Name: NATHAN C KLOPP Reg. No. 43836

TITLE: 36" PRESTRESSED CONCRETE BEAM (PRETENSIONED) 36M-84

BEAMS B1-B2

SAP NO 07-598-26

DES: NCK	DR: DLF	APPROVED:
CHK: JAJ	CHK: NCK	

SHEET NO B10 OF B21 SHEETS

FIG. 5-397.505

BRIDGE NO 07557

S:\AE\B\Blueb\107252\5-dgn\51-cadd\Cr152\br1dge\cbr07557.fig7505e.dgn
CR 152
2/3/2010
7:18:49 AM

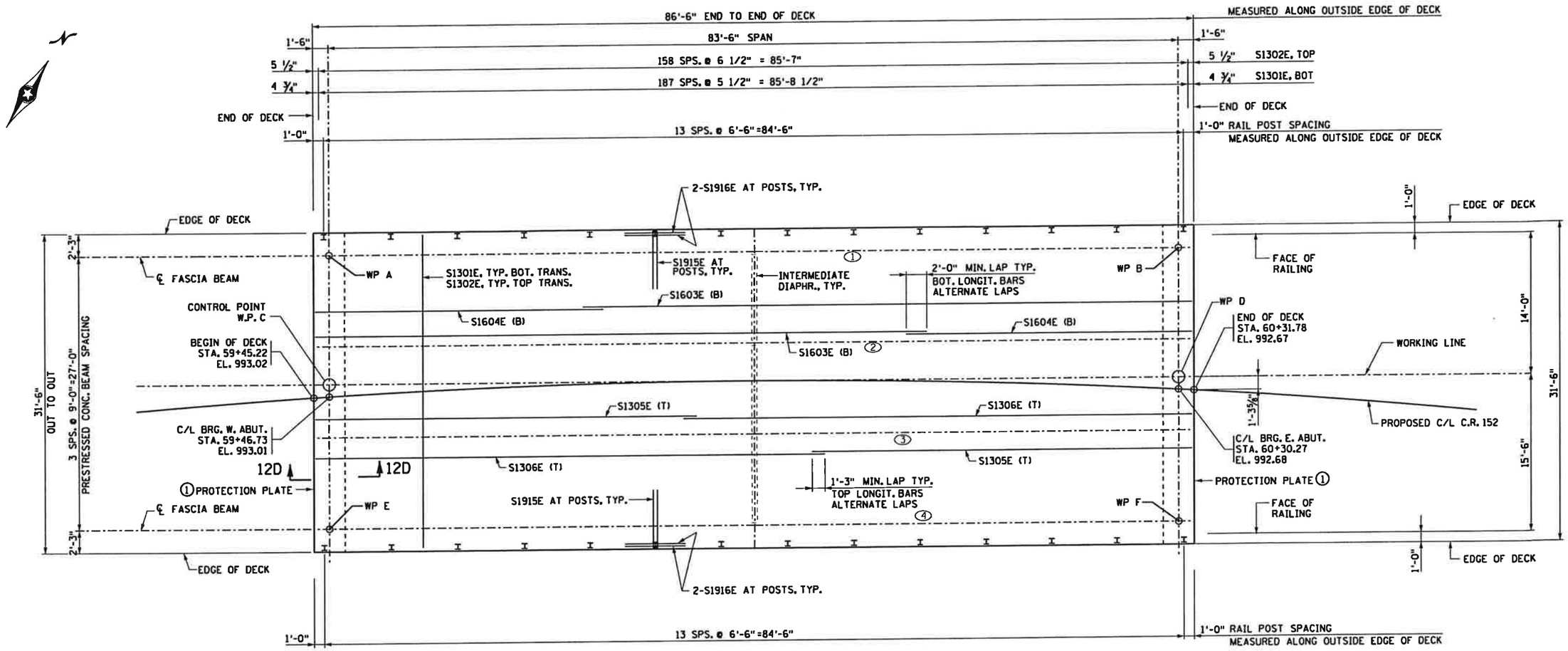

DECK PLAN

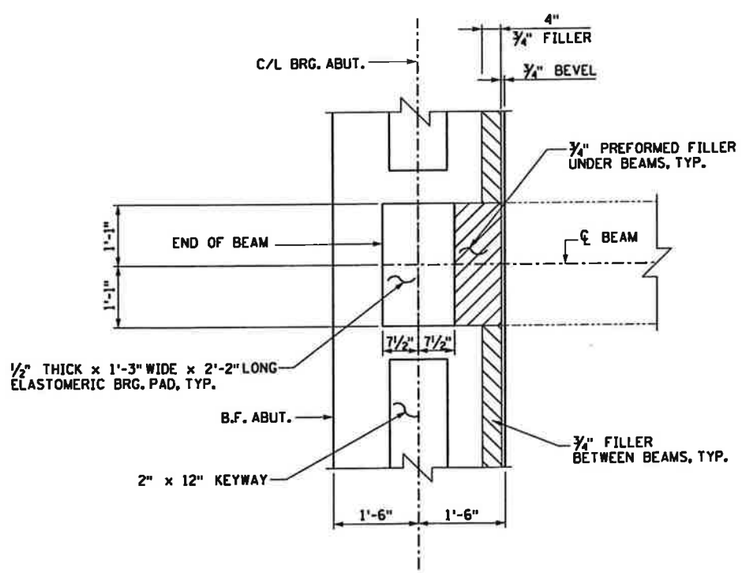

TYPICAL BEARING PAD PLAN

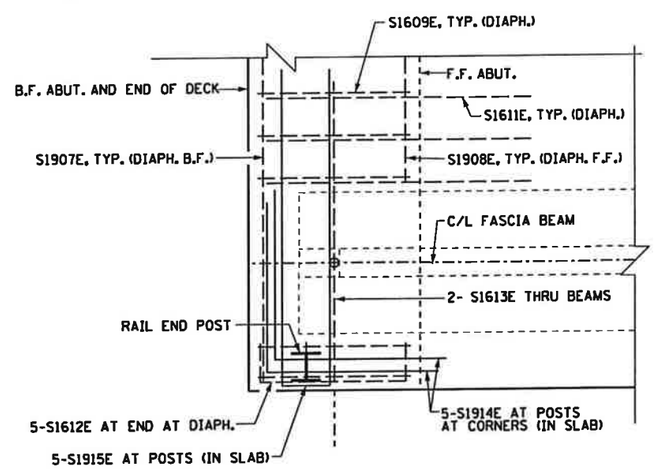

TYPICAL CORNER DETAIL

NOTES:

ALL DIMENSIONS SHOWN ARE MEASURED ON A HORIZONTAL PLANE.

SEE SHEET B13 FOR BAR LIST AND QUANTITIES.

THE SLAB THICKNESS DIMENSION IS MINIMUM. ANY TOLERANCES NECESSRY TO CORRECT CONSTRUCTION DISCREPANCIES ARE TO BE PLUS (+).

SEE SHEET B10 FOR BEAM DETAILS.

SEE SHEET B17 FOR INTERMEDIATE DIAPHRAGM DETAIL B403.

SEE SHEET B14 FOR STRUCTURAL TUBE RAILING DESIGN SPECIAL DETAILS.

(1) SEE DETAIL B553, SHEET B17.

B.F.= BACK FACE
F.F.= FRONT FACE
E.F.= EACH FACE

⬭ DENOTES BEAM LINE

SAP NO 07-598-26

SEH
3535 VADNAIS CENTER DRIVE
ST PAUL, MN 55110
PHONE (651) 490-2000
FAX (651) 490-2150

I hereby certify that this plan, specification, or report was prepared by me or under my direct supervision and that I am a duly Licensed Professional Engineer under the laws of the state of Minnesota

Signature: Nathan C Klopp Date: 2-3-2010
Printed Name: NATHAN C KLOPP Reg. No. 43836

TITLE: SUPERSTRUCTURE DETAILS

DES: MAW	DR: MAW	APPROVED:
CHK: NCK	CHK: NCK	

SHEET NO B11 OF B21 SHEETS

BRIDGE NO 07557

S:\AE\B\Bluep\107252\5-dsgn\51-cadd\Cr152\bridge\cbr07557_ss1.dgn
CR 152
2/3/2010
7:18:51 AM

NOTES:

SEE SHEET B11 FOR SUPERSTRUCTURE NOTES.

BF = BACK FACE
FF = FRONT FACE
EF = EACH FACE

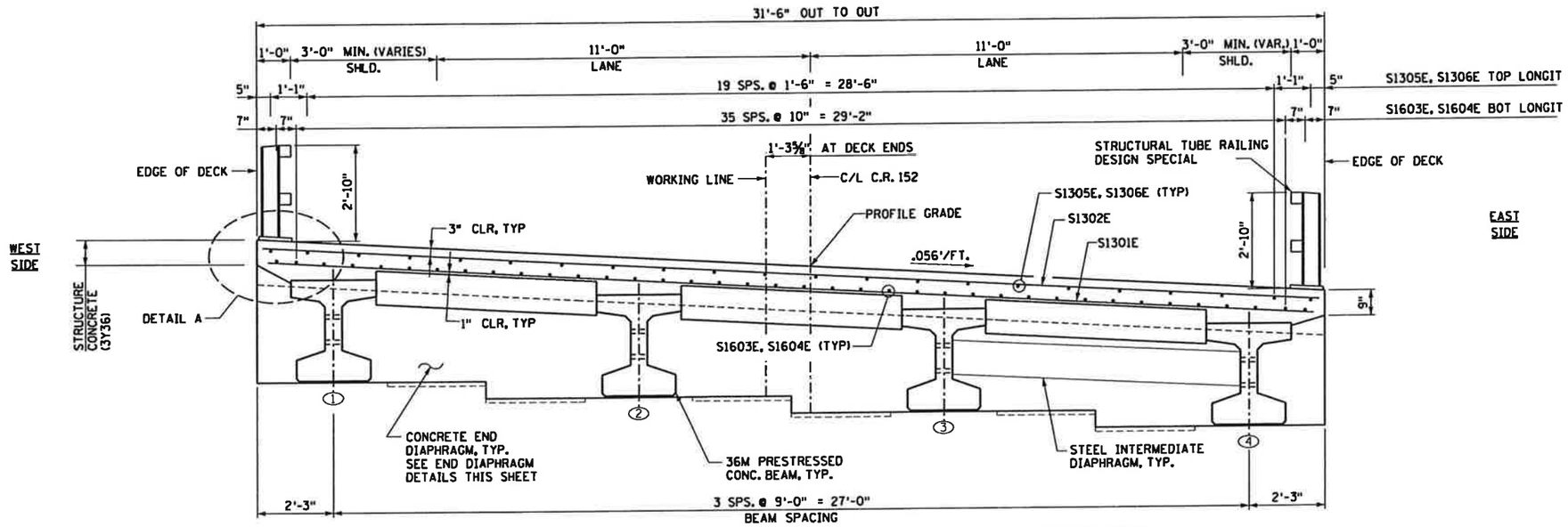

TRANSVERSE SECTION

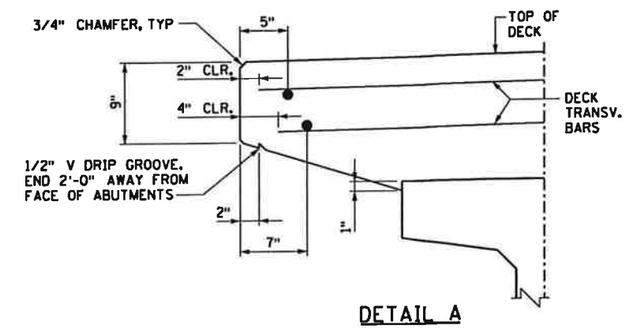

DETAIL A

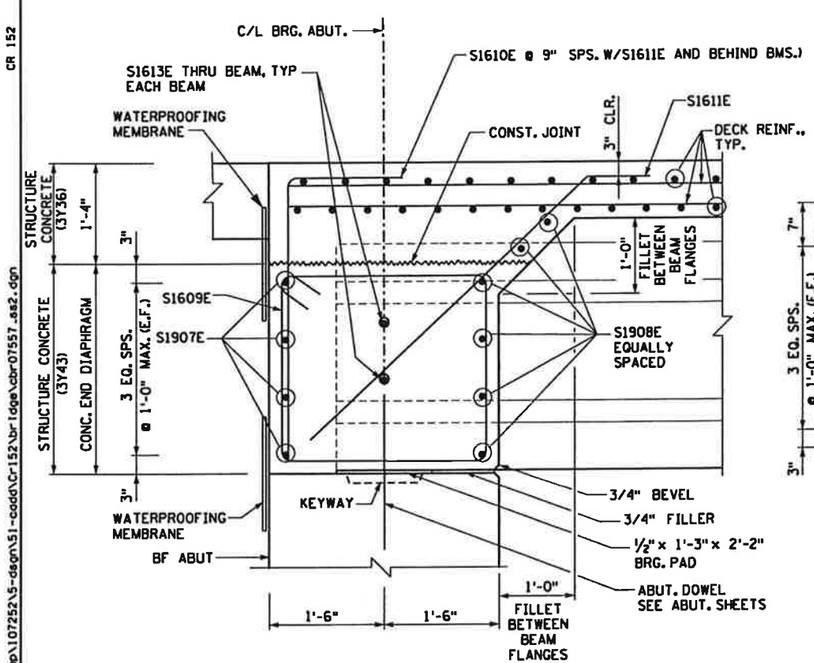

SECTION 12D-12D

TYPICAL SECTION THRU END DIAPHRAGM

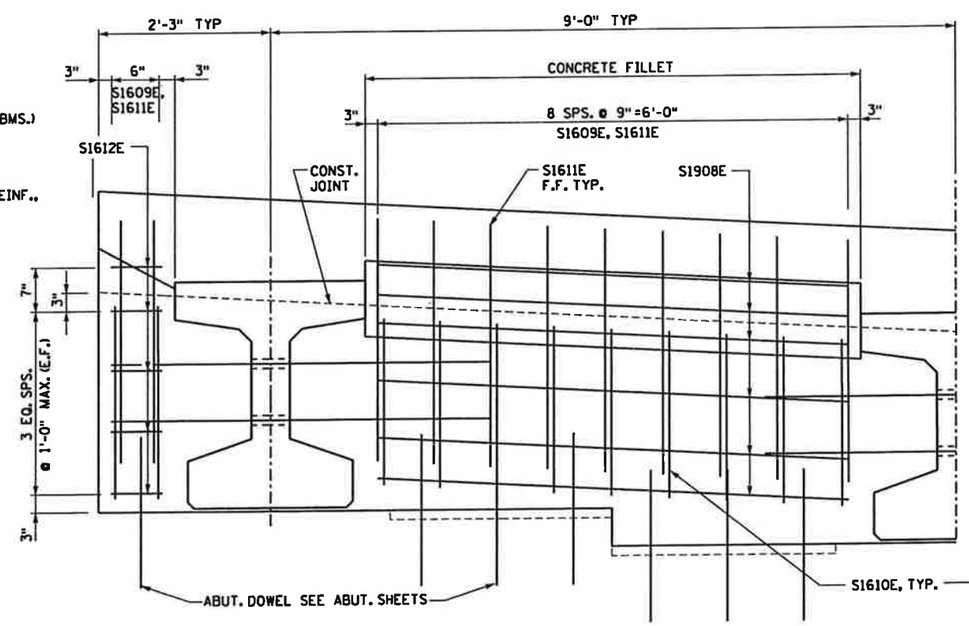

AT FASCIA

SHOWING FRONT FACE REINF

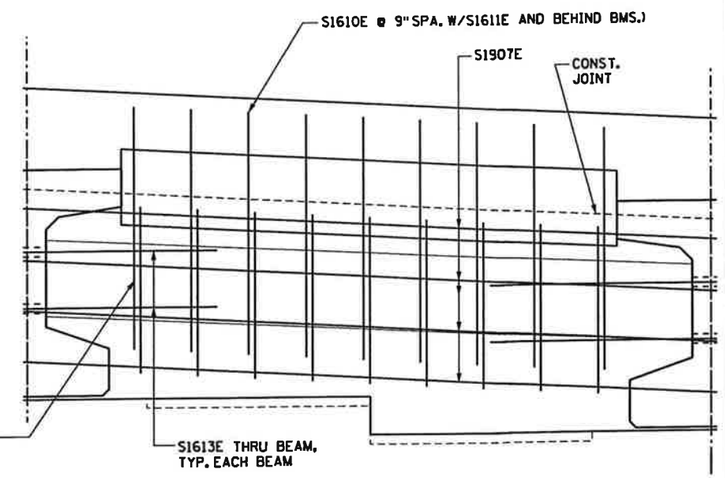

SHOWING BACK FACE REINF

TYPICAL END DIAPHRAGM ELEVATION

SEH
3535 VADNAIS CENTER DRIVE
ST PAUL, MN 55110
PHONE (651) 490-2000
FAX (651) 490-2150

I hereby certify that this plan, specification, or report was prepared by me or under my direct supervision and that I am a duly Licensed Professional Engineer under the laws of the state of Minnesota

Signature: Nathan C Klopp Date: 2-3-2010
Printed Name: NATHAN C KLOPP Reg. No. 43836

TITLE: SUPERSTRUCTURE DETAILS

SAP NO 07-598-26

DES: MAW	DR: MAW	APPROVED:	BRIDGE NO 07557
CHK: NCK	CHK: NCK		
SHEET NO B12 OF B21 SHEETS			

7:16:52 AM 2/3/2010 CR 152
S:\AE\B\B1uep\107252\5-dgn\51-cadd\Cr152\bridge\cbr07557_sss2.dgn

BAR MARK	NO. OF BARS	LENGTH	SHAPE	LOCATION
SUPERSTRUCTURE EPOXY COATED BARS				
S1301E	188	31'-2"	STR	TRANSV. SLAB BOT.
S1302E	159	30'-10"	STR	TRANSV. SLAB TOP
S1603E	38	60'-0"	STR	LONGIT. SLAB BOT.
S1604E	38	28'-2"	STR	LONGIT. SLAB BOT.
S1305E	22	50'-0"	STR	LONGIT. SLAB TOP
S1306E	22	37'-5"	STR	LONGIT. SLAB TOP
S1907E	8	31'-2"	STR	END DIAPHRAGM B.F.
S1908E	24	6'-2"	STR	END DIAPHRAGM F.F.
S1609E	62	11'-0"	BENT	END DIAPHRAGM STIRRUP
S1610E	62	5'-2"	BENT	END DIAPHRAGM
S1611E	62	5'-10"	BENT	END DIAPHRAGM
S1612E	20	3'-10"	BENT	END DIAPHRAGM
S1613E	16	8'-0"	STR	END DIAPHRAGM
S1914E	8	6'-0"	BENT	RAIL POSTS CORNERS
S1915E	28	12'-4"	BENT	RAIL POSTS
S1916E	48	6'-0"	STR	RAIL POSTS

BAR BENDING DIAGRAMS

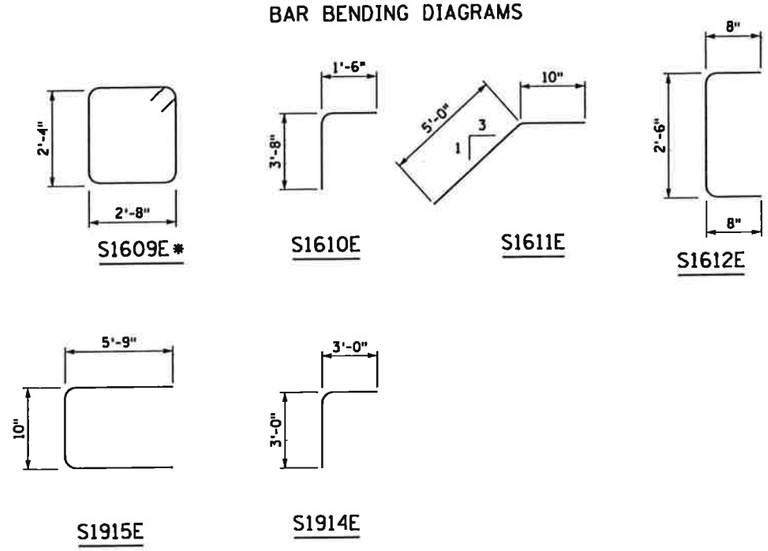

* BAR TYPE USES STANDARD STIRRUP AND TIE HOOKS.

NOTE
BENT BAR DIMENSIONS GIVEN ARE OUT-TO-OUT. ACTUAL BAR LENGTHS SHALL BE DETERMINED BASED ON DIMENSIONS SHOWN IN THE BAR BENDING DIAGRAMS. TOTAL BAR LENGTHS SHOWN ARE FOR USE IN COMPUTING REINFORCEMENT BAR WEIGHTS FOR PAYMENT ONLY.

SUMMARY OF QUANTITIES FOR SUPERSTRUCTURE

	ITEM	UNIT	QUANTITY
6	STRUCTURAL CONCRETE (3Y43)	CU YD	17
4	BRIDGE SLAB CONCRETE (3Y36)	SQ FT	2725
	STRUCTURAL TUBE RAILING DESIGN SPECIAL	LIN FT	169
8	REINFORCEMENT BARS (EPOXY COATED)	POUND	15220
9	ELASTOMERIC BEARING PAD, TYPE 1	EACH	8
	PRESTRESSED CONCRETE BEAMS 36M	LIN FT	339
7	DIAPHRAGMS FOR TYPE 36M PRESTRESSED BEAMS	LIN FT	27
1	BRIDGE NAME PLATE	EACH	1
2 1	PREFORMED JOINT FILLER	——	——
10 1	WATERPROOFING MEMBRANE SYSTEM	LIN FT	124
3 1	BENCH MARK DISK	EACH	1

1 INCLUDED IN PRICE BID FOR OTHER ITEMS.

2 SEE JOINT FILLER TABLE.

3 COUNTY WILL FURNISH DISK. BEND PRONGS OUTWARD TO ANCHOR DISK IN CONCRETE. BOTTOM OF DISK TOP TO BE PLACED FLUSH WITH CONCRETE.

4 THE APPROXIMATE CONCRETE QUANTITIES ARE:
BRIDGE SLAB CONCRETE BASED ON AVERAGE STOOL HEIGHT OF 2" (3Y36)
90 CU YD

5 TABLE IS FOR CONTRACTORS CONVENIENCE ONLY. CUT TO FIT.

6 END DIAPHRAGM CONCRETE ONLY.

7 INTERMEDIATE DIAPHRAGMS ONLY.

8 INCLUDES END DIAPHRAGMS, RAILING & DECK REINFORCEMENT.

9 ELASTOMERIC BEARING PAD, TYPE 1
SIZE 1/2"THICK X 1'-3"WIDE X 2'-2"LONG

10 INCLUDES 36 LF OF WATERPROOFING MEMBRANE AT PERMISSIBLE CJ.

5 1 PREFORMED JOINT FILLER LIST

TYPE	NO	SIZE	LOCATION
CORK	4	1/2"x 1'-6"x 4'-2"	BETWEEN DECK AND WING
FILLER	2	3/4"x 4"x 23'-0"	ABUT SEATS
FILLER	8	3/4"x 2'-2"x 10"	ABUT SEATS UNDER BMS

SEH
3535 VADNAIS CENTER DRIVE
ST PAUL, MN 55110
PHONE (651) 490-2000
FAX (651) 490-2150

I hereby certify that this plan, specification, or report was prepared by me or under my direct supervision and that I am a duly Licensed Professional Engineer under the laws of the state of Minnesota
Signature: Nathan C Klopp Date: 2-3-2010
Printed Name: NATHAN C KLOPP Reg. No. 43836

TITLE: SUPERSTRUCTURE BAR LIST AND QUANTITIES

SAP NO 07-598-26

DES: MAW	DR: MAW	APPROVED:
CHK: NCK	CHK: NCK	

SHEET NO B13 OF B21 SHEETS

BRIDGE NO 07557

7:18:54 AM
2/3/2010
CR 152
S:\AE\B\Bluep\107252\5-dsgn\51-cadd\Cr152\bridge\cbr07557_asb.dgn

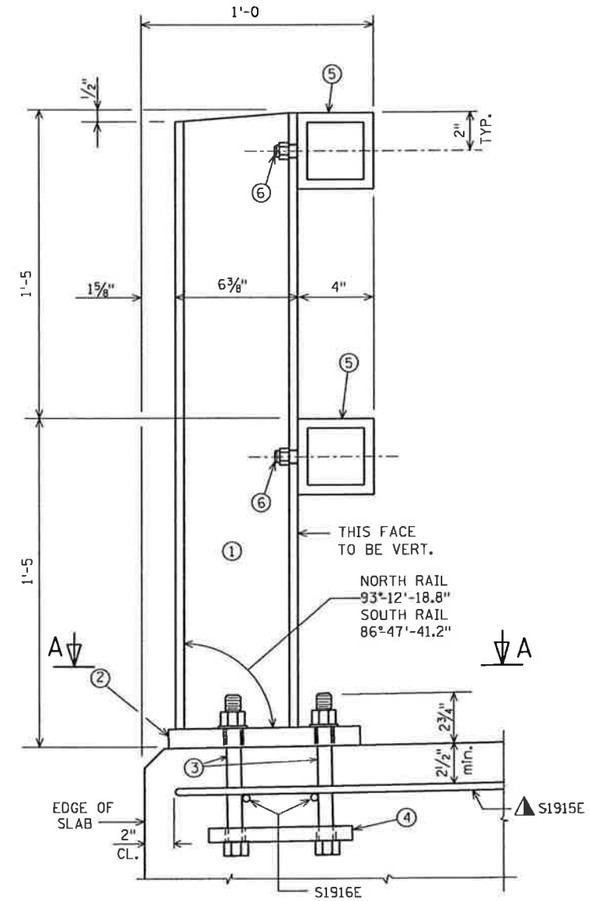

SECTION THRU RAILING ON DECK

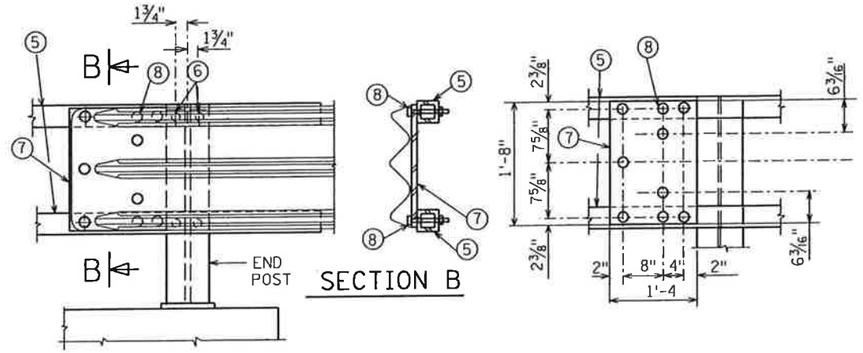

SECTION B

DETAIL AT END POST

(THRIE BEAM RAIL ATTACHMENT)

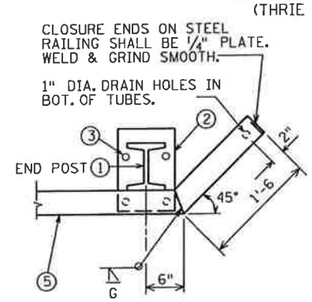

DETAIL FOR END POSTS

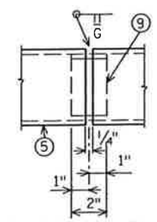

SHOP RAIL SPLICE DETAIL

(LOCATION MUST BE SHOWN ON SHOP DRAWINGS)

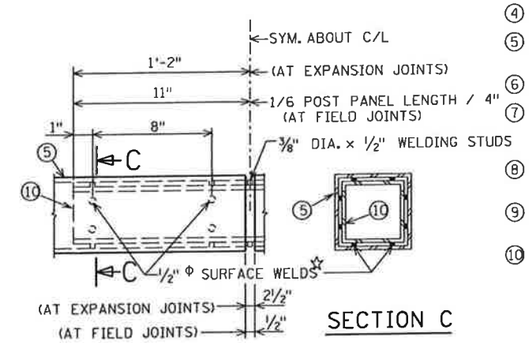

FIELD ERECTION JOINT DETAIL

☆ MIN. 5/8" FLAT SURFACE DIA. PUNCHINGS OR STUDS MAY BE USED AS AN ALTERNATE.

SECTION C

LEGEND

1. W6X25 WITH 1 1/4" DIA. HOLES ON EACH SIDE OF POST FOR STUD NO. 6. CUT BOTTOM OF POST TO MATCH CROSS SLOPE OF ROADWAY. PLACE POST VERTICAL. PLACE POSTS NORMAL TO GRADE LINE.
2. PLATE 1" X 9 1/2" X 10", WITH 1 1/16" X 1 1/2" SLOTTED HOLES FOR ANCHOR BOLTS NO. 3. WELD TO NO. 1 AS SHOWN.
3. A325 - 7/8" DIA. HEX BOLTS (GALVANIZED) WITH A325 NUT & WASHER. 14" LONG AT END POSTS AND AT POSTS ON CONCRETE SLAB SUPERSTRUCTURES WHERE THE SLAB THICKNESS IS GREATER THAN 15". USE 8" LONG AT ALL OTHER LOCATIONS. 4 REQ'D. PER POST. THREAD 3" AND PLACE NORMAL TO PLATE NO. 2. CHAMFER TOP OF BOLTS BEFORE THREADING.
4. 1/4" X 8" X 8" FLAT BAR, WITH 15/16" DIA. HOLES FOR ANCHOR BOLTS NO. 3.
5. TS 4 X 4 X 0.25 STRUCTURAL TUBING, CONFORMING TO ASTM DESIGNATION A501 OR A500 GRADE B. ATTACH TO NO. 1 WITH TWO NO. 6 STUDS.
6. 5/8" DIA. X 1 1/2" LG. SHOP WELDED STUDS WITH HEX NUT AND 2" WASHERS.
7. 3/8" X1'-4" X 1'-8" PLATE. BOLT TO RAIL AS SHOWN IN DETAIL. REQUIRED AT THRIE BEAM GUARD RAIL ATTACHMENTS ONLY. PLACED SYM. ABOUT TUBES NO. 5.
8. 1" DIA. HOLES IN PLATE NO. 7 & TUBES NO. 5 FOR 7/8" DIA. A325 BOLTS W/HEX NUTS AND WASHERS.
9. SQUARE SLEEVE FABRICATED FROM 1/4" PLATE. PROVIDE "SLIDING FIT" WITH A MINIMUM OUT TO OUT DIMENSION OF 3 13/32".
10. TS 3 X 3 X 0.25 X (2'-4" AT EXPANSION JOINTS) & (1'-10" AT FIELD JOINTS) LONG. PROVIDE 1/2" DIA. SURFACE WELDS ON ALL SIDES AS SHOWN. GRIND WELDS TO FIT FREE INTO I.D. OF NO. 5. PROVIDE 3/8" DIA. X 1/2" WELDING STUDS ON TOP AND BOTTOM SURFACES AT CENTERLINE.

GENERAL NOTES

BID ITEM SHALL BE "STRUCTURAL TUBE RAILING DESIGN SPECIAL", WHICH INCLUDES ALL ITEMS SHOWN.

RAILING SHALL BE FABRICATED IN LENGTHS THAT INCLUDE 3 OR 4 POSTS

POST BASE PLATES, NO. 2, SHALL BE FLAT WITH ALL SURFACES SMOOTH, STRAIGHT AND FREE FROM WARP AND ALL EDGES SMOOTH, STRAIGHT AND VERTICAL. ALL PLATE CUTS SHALL BE MACHINE OR MACHINE FLAME CUT.

ALL MATERIAL, EXCEPT ANCHORAGE DETAIL NO. 4 SHALL BE GALVANIZED AFTER FABRICATION.

FILL BOLT SLOT OPENINGS IN POST SHIMS AND PLATE NO. 2 WITH NON-STAINING GRAY NON-BITUMINOUS JOINT SEALER.

ALL MATERIALS USED IN FABRICATION SHALL BE MADE FROM MATERIALS CONFORMING TO ASTM DESIGNATION A709 GRADE 36 UNLESS NOTED OTHERWISE.

STEEL POST SHIMS MAY BE USED UNDER POSTS WHERE REQ'D. FOR ALIGNMENT.

PRIOR TO GALVANIZING, ALL STEEL RAILING POSTS & STEEL TUBING SHALL BE GIVEN A NO. 6 BLAST CLEANING BY SSPC SPECIFICATIONS.

PLACE FIRST BOTTOM LONGITUDINAL BAR CLEAR OF DRIP GROOVE.

⚠ TIE TO TOP MAT OF STEEL.

STRUCTURAL TUBE RAILING DESIGN IS A WISCONSIN DOT STANDARD TUBULAR METAL RAILING TYPE F. THIS RAILING MEETS NCHRP REPORT 350 EVALUATION CRITERIA FOR TEST LEVEL 2 (TL-2).

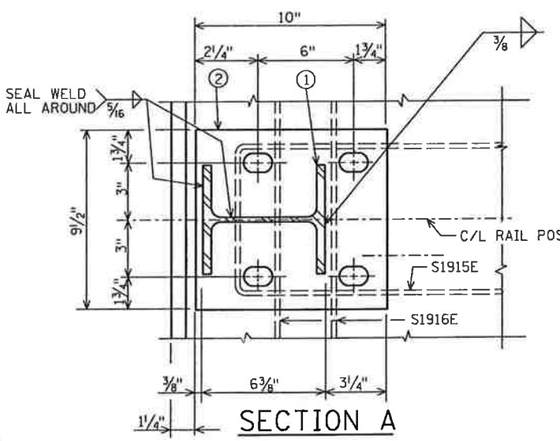

SECTION A

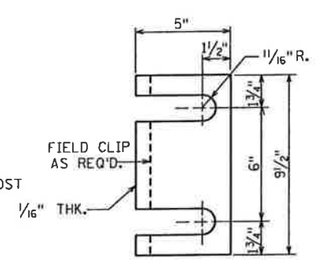

POST SHIM DETAIL

4 PER POST

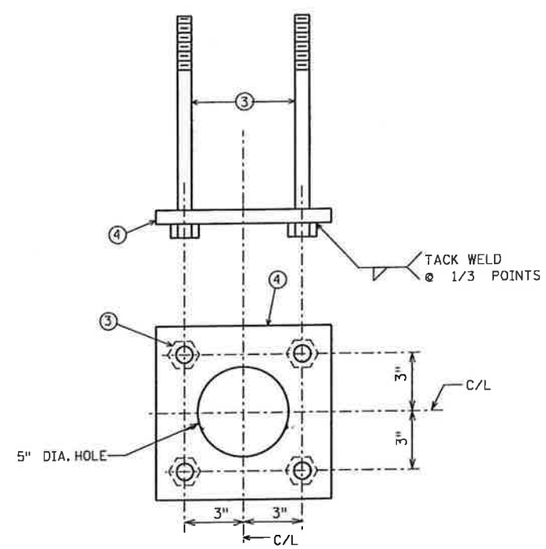

ANCHORAGE DETAIL

SEH
3535 VADNAIS CENTER DRIVE
ST PAUL, MN 55110
PHONE (651) 490-2000
FAX (651) 490-2150

I hereby certify that this plan, specification, or report was prepared by me or under my direct supervision and that I am a duly Licensed Professional Engineer under the laws of the state of Minnesota

Signature: Nathan C Klopp Date: 2-3-2010

Printed Name: NATHAN C KLOPP Reg. No. 43836

TITLE: STRUCTURAL TUBE RAIL DESIGN SPECIAL

SAP NO 07-598-26

DES: JAJ	DR: MAW	APPROVED:	BRIDGE NO 07557
CHK: NCK	CHK: NCK		
SHEET NO B14 OF B21 SHEETS			

7:18:56 AM
2/3/2010
CR 152
S:\AE\B\B1uap\107252\5-dsgn\51-cadd\Cr152\bridge\cbr07557_rdl.dgn

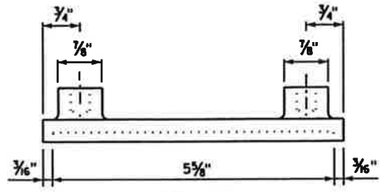

PLAN VIEW

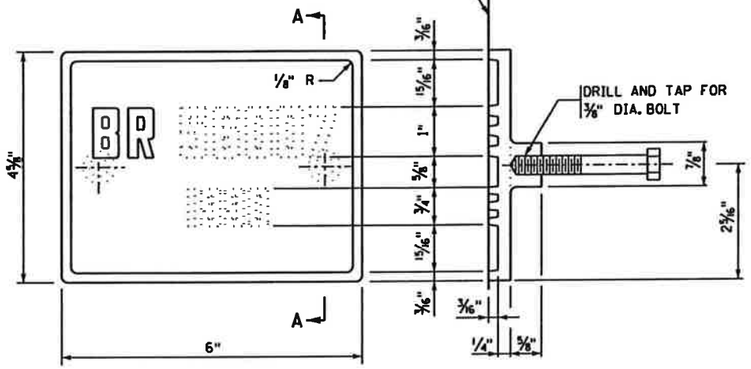

ELEVATION

SECTION A-A

THE DASHED NUMBERS SHOWN ABOVE ARE FOR ILLUSTRATION. DATA TO BE SHOWN ON NAMEPLATE IS AS FOLLOWS:

BRIDGE 07557

YEAR 2010 (OR YEAR CONSTRUCTED)

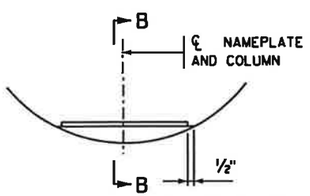

NAMEPLATE PLACEMENT

(ROUND CONCRETE PIER COLUMNS)

NUMBERS FOR NAMEPLATE

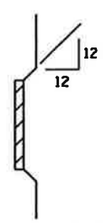

SECTION B-B

NOTES:

NO SHOP DRAWING REQUIRED.

MATERIAL SHALL COMPLY WITH Mn/DOT SPEC. 3327.

LETTERS AND NUMBERS SHALL CONFORM TO THOSE SHOWN.

DRAFT ON LETTERS AND NUMBERS SHALL NOT BE MORE THAN 3" IN 12".

HORIZONTAL SPACING OF LETTERS AND NUMBERS SHALL PRODUCE A BALANCED LAYOUT IN PROPORTION TO SPACING SHOWN.

TOP SURFACE OF LETTERS, NUMBERS AND FRAMES SHALL BE BURNISHED.

FURNISH 2 STEEL BOLTS, 3/4" DIA. x 3" LONG WITH EACH PLATE.

ALL DIMENSIONS FOR 3/4" HIGH LETTERS AND NUMBERS SHALL BE IN DIRECT PROPORTION TO THOSE SHOWN FOR THE 1" HIGH LETTERS AND NUMBERS.

APPROVED: NOVEMBER 22, 2002	STATE OF MINNESOTA DEPARTMENT OF TRANSPORTATION	REVISION	DETAIL NO.
Daniel L Morgan STATE BRIDGE ENGINEER	BRIDGE NAMEPLATE (FOR NEW BRIDGES)		B101

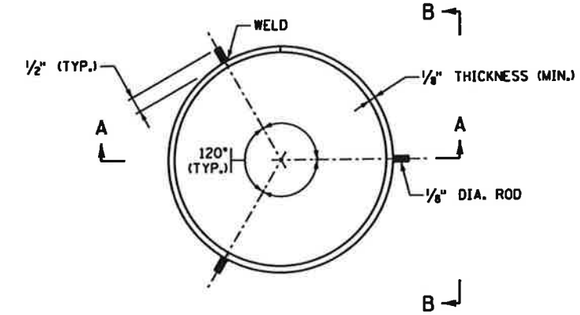

PLAN VIEW SPLICE

PILE NOT SHOWN

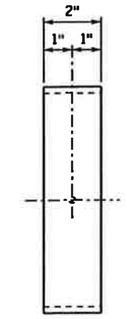

SECTION B-B

PILE NOT SHOWN

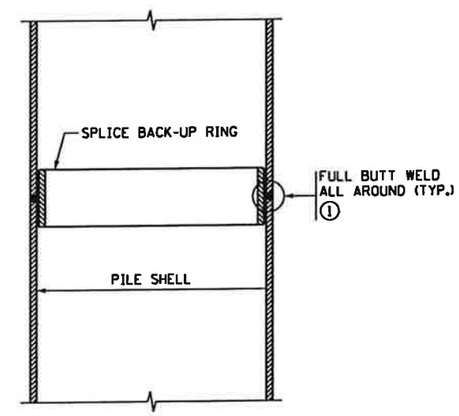

SECTION A-A

NOTES:

APPROVED COMMERCIAL PILE SPLICE BACK-UP RING MAY BE USED IN LIEU OF THE TYPE DETAILED. BACK-UP RING SHALL HAVE A TIGHT FIT.

WELDING ELECTRODES SHALL BE CELLULOSIC TYPE ELECTRODES E-6010 OR E-6011.

ELECTRODES WHICH HAVE BECOME WET, SOILED OR DAMAGED SHALL NOT BE USED.

WELDING SHALL NOT BE DONE WHEN THE AMBIENT TEMPERATURE IS LOWER THAN 0° F. OR WHEN THE PILE IS WET OR EXPOSED TO FALLING RAIN OR SNOW. WHEN THE PILE METAL TEMPERATURE IS BELOW 32° F., THE PILE METAL IN THE AREA OF THE WELD SHALL BE HEATED TO A MINIMUM TEMPERATURE OF 70° F. AND MAINTAINED AT THIS TEMPERATURE DURING WELDING.

1 FOR PILE SHELL THICKNESSES GREATER THAN 1/2", USE A B-U4a WELD CONFIGURATION.

APPROVED: NOVEMBER 22, 2002	STATE OF MINNESOTA DEPARTMENT OF TRANSPORTATION	REVISION	DETAIL NO.
Daniel L Morgan STATE BRIDGE ENGINEER	PILE SPLICE (CAST-IN-PLACE CONCRETE PILES)		B201

SEH
3535 VADNAIS CENTER DRIVE
ST PAUL, MN 55110
PHONE (651) 490-2000
FAX (651) 490-2150

I hereby certify that this plan, specification, or report was prepared by me or under my direct supervision and that I am a duly Licensed Professional Engineer under the laws of the state of Minnesota

Signature: Nathan C Klopp Date: 2-3-2010

Printed Name: NATHAN C KLOPP Reg. No. 43836

TITLE: B DETAILS

SAP NO 07-598-26

DES: MAW	DR: MAW	APPROVED:	BRIDGE NO 07557
CHK: NCK	CHK: NCK		
SHEET NO B15 OF B21 SHEETS			

S:\AE\B\Bluep\107252\5-dgn\51-cadd\Cr152\bridge\cbr07557_b101-b201.dgn CR 152 2/3/2010 7:18:57 AM

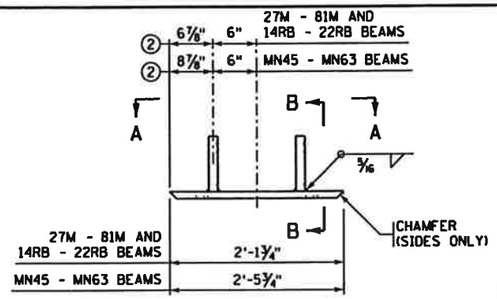

FRONT ELEVATION - OPTION 1

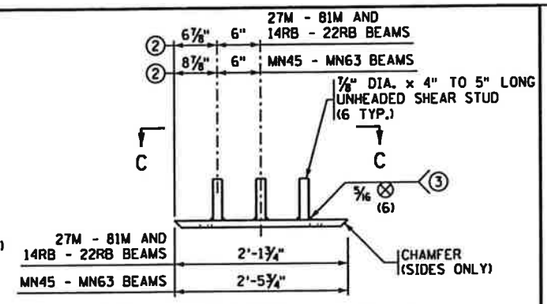

FRONT ELEVATION - OPTION 2

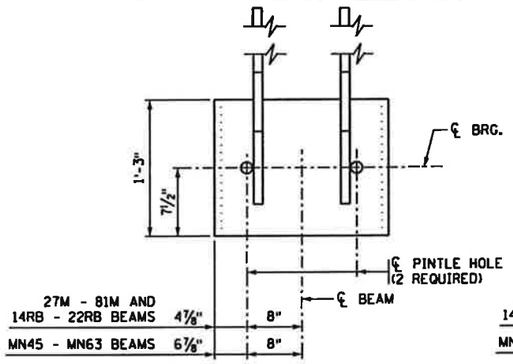

SECTION A-A

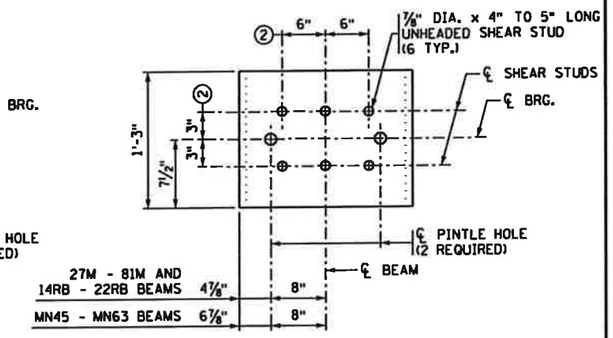

SECTION C-C

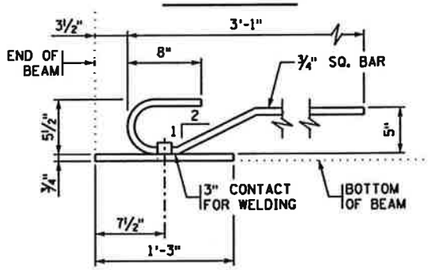

SECTION B-B

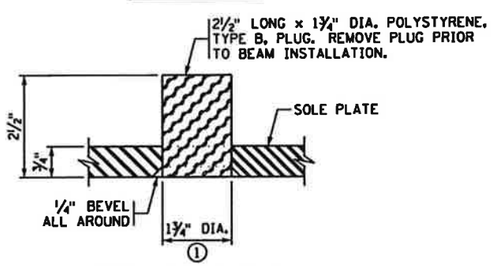

PINTLE HOLE DETAIL

NOTES:

MATERIAL TO BE STRUCTURAL STEEL PER Mn/DOT SPEC. 3306.

WELDED STUDS TO BE WELDABLE CARBON STEEL PER Mn/DOT SPEC. 3391.2D.

SOLE PLATE FOR BEARING ASSEMBLY TO BE GALVANIZED PER Mn/DOT SPEC. 3394 AFTER FABRICATION.

PINTLE HOLES SHALL BE FREE OF ZINC BUILD UP FROM GALVANIZING.

SOLE PLATES ARE INCIDENTAL TO PRESTRESSED CONCRETE BEAMS.

1 FOR 1½" DIA. PINTLES.

2 THESE DIMENSIONS MAY BE MODIFIED TO CLEAR PRESTRESSED STRANDS. HOWEVER, CHANGES MUST BE APPROVED BY THE ENGINEER.

3 THE REQUIREMENTS FOR WELDING STUDS SHALL COMPLY WITH AASHTO/AWS D1.5.

APPROVED: OCTOBER 26, 2005	STATE OF MINNESOTA DEPARTMENT OF TRANSPORTATION	REVISED 06-14-2006 10-28-2008	DETAIL NO.
Daniel L Dorgan STATE BRIDGE ENGINEER	SOLE PLATE (PRESTRESSED CONCRETE BEAMS) (FOR BEARINGS WITH PINTLES)		B303

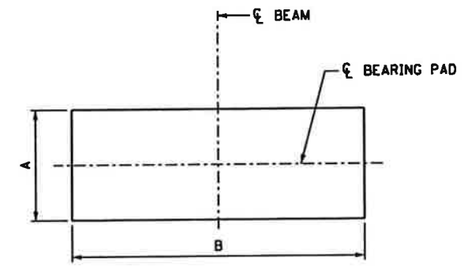

PLAN

(BEAM NOT SHOWN)

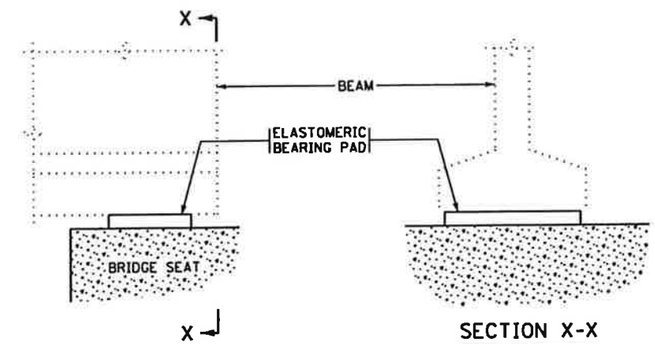

SIDE ELEVATION

SECTION X-X

TABLE						
PAD TYPE	LOCATION	BEAM SIZE	BEARING PAD SIZE			SHAPE FACTOR
			A	B	D 1	
			15	26	½	8.0

NOTES:

ELASTOMERIC MATERIALS AND PAD CONSTRUCTION SHALL COMPLY WITH Mn/DOT SPEC. 3741.

PAYMENT FOR ELASTOMERIC BEARING PAD, TYPE 1, INCLUDED IN ITEM "ELASTOMERIC BEARING PAD" PER EACH.

1 "D" INDICATES THE THICKNESS OF THE BEARING PAD.

APPROVED: NOVEMBER 22, 2002	STATE OF MINNESOTA DEPARTMENT OF TRANSPORTATION	REVISION 12-17-2008	DETAIL NO.
Daniel L Dorgan STATE BRIDGE ENGINEER	ELASTOMERIC BEARING PAD (PRESTRESSED CONCRETE BEAMS)		B305

SEH
3535 VADNAIS CENTER DRIVE
ST PAUL, MN 55110
PHONE (651) 490-2000
FAX (651) 490-2150

I hereby certify that this plan, specification, or report was prepared by me or under my direct supervision and that I am a duly Licensed Professional Engineer under the laws of the state of Minnesota

Signature: Nathan C Klopp Date: 2-3-2010
Printed Name: NATHAN C KLOPP Reg. No. 43836

TITLE: B DETAILS

SAP NO 07-598-26

DES: MAW	DR: MAW	APPROVED:	BRIDGE NO 07557
CHK: JAJ	CHK: JAJ		
SHEET NO B16 OF B21 SHEETS			

S:\AE\B\Buep\107252\5-dgn\51-cadd\Cr152\bridge\cbr07557_b303-b305.dgn CR 152 2/3/2010 7:18:58 AM

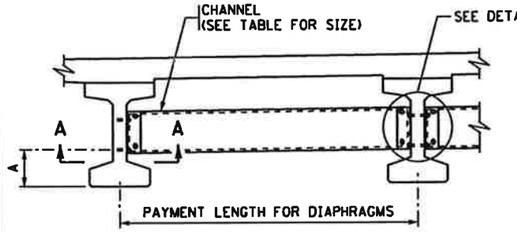

PART TRANSVERSE SECTION AT DIAPHRAGM

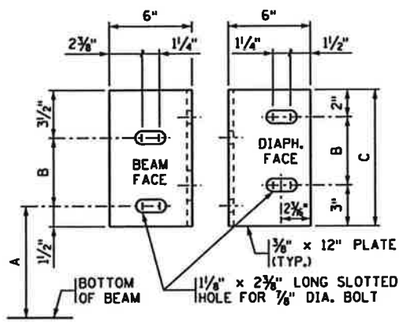

DIAPHRAGM CONNECTION

FOR 36M, 45M AND MN45 BEAMS

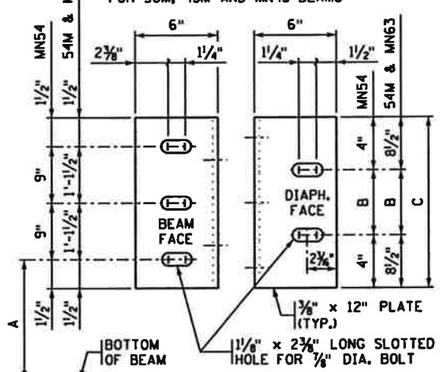

DIAPHRAGM CONNECTION

FOR 54M, MN54 AND MN63 BEAMS

TABLE				
BEAM HEIGHT	DISTANCE			CHANNEL SIZE
	A	B	C	
36M	1'-3"	7"	1'-0"	C12x20.7
45M	1'-3¾"	1'-1"	1'-6"	MC18x42.7
54M	1'-2¼"	1'-1"	2'-6"	MC18x42.7
MN45	1'-7¾"	7"	1'-0"	C12x20.7
MN54	1'-7¾"	1'-1"	1'-9"	MC18x42.7
MN63	1'-7¾"	1'-1"	2'-6"	MC18x42.7

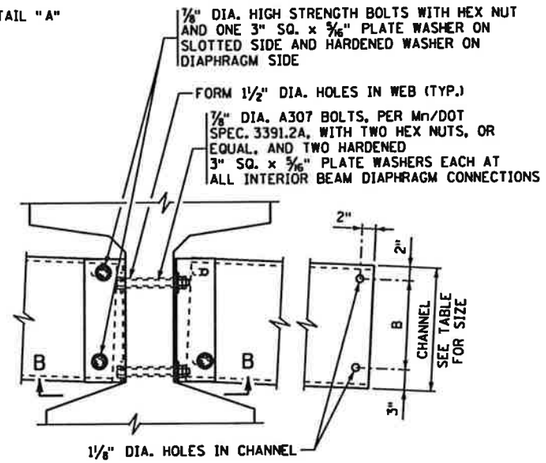

DETAIL "A"

INTERIOR BEAM WITH CONTINUOUS LINE OF DIAPHRAGMS

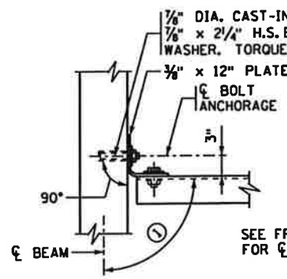

SECTION A-A

TYPICAL SECTION AT ALL FASCIA BEAMS

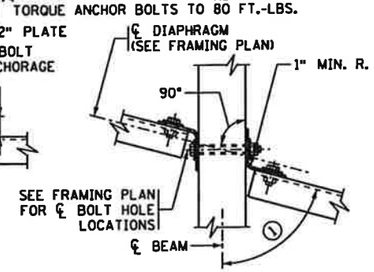

SECTION B-B

TYPICAL SECTION AT INTERIOR BEAM WITH CONTINUOUS OR STAGGERED INTERMEDIATE DIAPHRAGMS

NOTES:

ALL STEEL SHALL CONFORM TO Mn/DOT SPEC. 3306.

INSTALLATION SHALL CONFORM TO Mn/DOT SPEC. 2405.3M.

THE LEG OF THE 12" PLATE SHALL BE SHOP BENT TO CONFORM TO THE DIAPHRAGM. A ⅜" x 6" x 6" ANGLE MAY BE USED FOR DIAPHRAGMS PERPENDICULAR TO BEAMS.

ALL STRUCTURAL STEEL SHOWN ON THIS DETAIL, INCLUDING BOLTS AND WASHERS, SHALL BE INCLUDED IN UNIT PRICE BID FOR DIAPHRAGMS FOR PRESTRESSED BEAMS.

BENT PLATES MAY BE USED IN PLACE OF CHANNELS. THE BENT PLATES MUST BE THE SAME HEIGHT AS THE CHANNELS THEY REPLACE, BE 5/16" IN THICKNESS, AND HAVE LEGS 5" LONG.

① FOR SKEW ANGLES UNDER 20°, USE 90° LESS THE SKEW ANGLE. FOR SKEW ANGLES OVER 20°, USE 90°.

APPROVED: OCTOBER 26, 2005	STATE OF MINNESOTA DEPARTMENT OF TRANSPORTATION	REVISED 06-14-2006	DETAIL NO.
Daniel L Dorgan STATE BRIDGE ENGINEER	STEEL INTERMEDIATE DIAPHRAGM (FOR 36M - 54M, MN45 - MN63 PRESTRESSED CONCRETE BEAMS)		B403

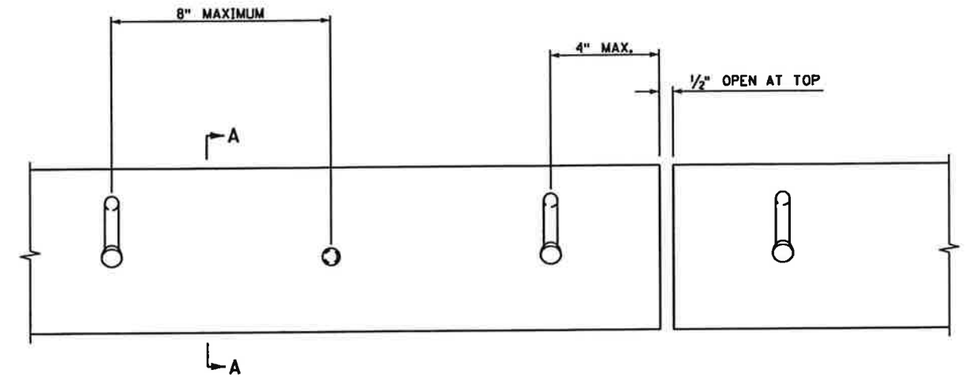

ELEVATION

CONCRETE NOT SHOWN

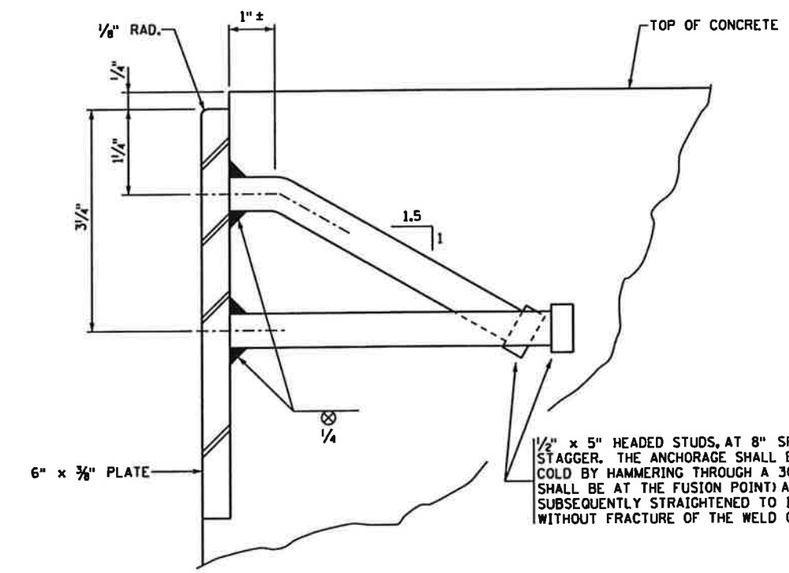

SECTION A-A

NOTES:

PLATES SHALL EXTEND FULL WIDTH OF ROADWAY BETWEEN GUTTER LINES WITH A ½" OPEN JOINT AT EACH BREAK IN CROWN PROFILE. MAX. LENGTH 22 FT.

MATERIALS: STRUCTURAL STEEL PER Mn/DOT SPEC. 3306. GALVANIZE AFTER FABRICATION PER Mn/DOT SPEC. 3394

SET PLATE TO PROPER GRADE AND CROWN.

APPROVED: NOVEMBER 22, 2002	STATE OF MINNESOTA DEPARTMENT OF TRANSPORTATION	REVISION	DETAIL NO.
Daniel L Dorgan STATE BRIDGE ENGINEER	PROTECTION PLATE (FOR END OF SLAB)		B553

SEH
3535 VADNAIS CENTER DRIVE
ST PAUL, MN 55110
PHONE (651) 490-2000
FAX (651) 490-2150

I hereby certify that this plan, specification, or report was prepared by me or under my direct supervision and that I am a duly Licensed Professional Engineer under the laws of the state of Minnesota

Signature: Nathan C Klopp Date: 2-3-2010
Printed Name: NATHAN C KLOPP Reg. No. 43836

TITLE: B DETAILS

SAP NO 07-598-26

DES: MAW	DR: MAW	APPROVED:	BRIDGE NO
CHK: NCK	CHK: NCK		07557
SHEET NO B17 OF B21 SHEETS			

7:19:00 AM 2/3/2010 CR 152
S:\AE\B\B1uep\107252\5-dgn\51-cadd\Cr152\bridge\cbr07557_b403-b553.dgn

SUMMARY OF QUANTITIES FOR DRAINAGE SYSTEM

2" DIA. PERFORATED PIPE	72	LIN. FT.
2" DIA. NON-PERFORATED PIPE	40	LIN. FT.
2" DIA. END CAP	2	EACH
2" DIA. COUPLING	2	EACH
③ PRECAST CONCRETE HEADWALL	2	EACH

THE SUMMARY OF QUANTITIES FOR DRAINAGE SYSTEM IS AS SHOWN ABOVE. ANY ADDITIONAL MINOR ITEMS OR SLIGHT CHANGES OF QUANTITIES REQUIRED SHALL BE FURNISHED BY THE CONTRACTOR WITH NO ADDITIONAL COMPENSATION.

PAYMENT WILL BE INCLUDED IN THE SINGLE LUMP SUM PRICE FOR ITEM 2502.601 "DRAINAGE SYSTEM, TYPE (B911)".

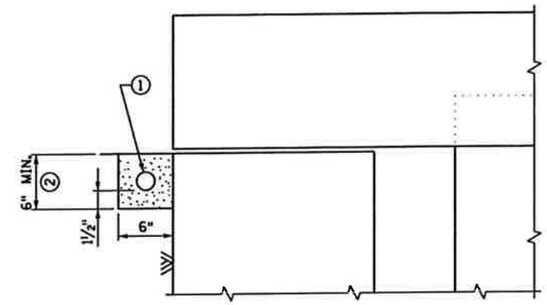

SECTION AT ABUTMENT

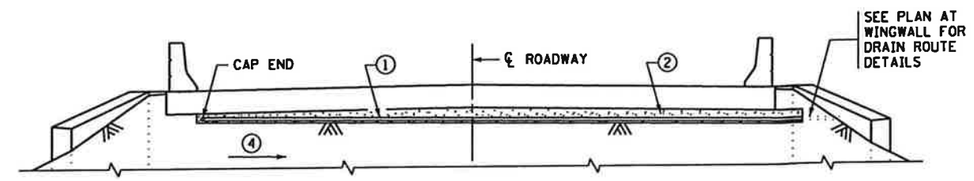

ELEVATION AT BACK FACE OF ABUTMENT

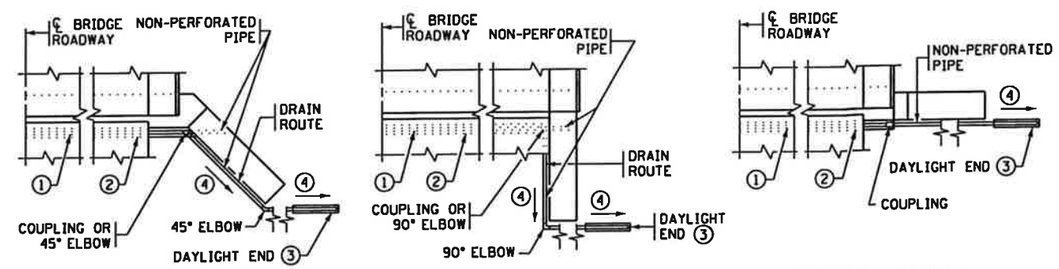

45° WINGWALL PARALLEL WINGWALL STRAIGHT WINGWALL

PLAN AT WINGWALL

NOTES:

ALL PIPE SHALL BE PER Mn/DOT SPEC. 3245.

① 2" NOMINAL DIA. THERMOPLASTIC PERFORATED PIPE. SLOPE PIPE TO DITCH ON LOW SIDE. WRAP PIPE WITH GEOTEXTILE AS PER Mn/DOT SPEC. 3733.

② BACKFILL WITH FINE AGGREGATE, Mn/DOT SPEC. 3149, MODIFIED TO 0-3% PASSING A NO. 200 SIEVE.

③ PRECAST CONCRETE HEADWALL WITH A RODENT SCREEN ON THE END. SEE STANDARD PLATE 3131 FOR DETAILS.

④ 1/8" PER FT. MINIMUM SLOPE.

APPROVED: NOVEMBER 22, 2002	STATE OF MINNESOTA DEPARTMENT OF TRANSPORTATION	REVISION	DETAIL NO.
Daniel L Dorgan STATE BRIDGE ENGINEER	DRAINAGE SYSTEM (FOR SLAB OVER PARAPET ABUTMENTS) (WITH NO APPROACH TREATMENT)		B911

SEH
3535 VADNAIS CENTER DRIVE
ST PAUL, MN 55110
PHONE (651) 490-2000
FAX (651) 490-2150

I hereby certify that this plan, specification, or report was prepared by me or under my direct supervision and that I am a duly Licensed Professional Engineer under the laws of the state of Minnesota

Signature: Nathan C Klopp Date: 2-3-2010

Printed Name: NATHAN C KLOPP Reg. No. 43836

TITLE: B DETAILS

SAP NO 07-598-26

DES: MAW	DR: MAW	APPROVED:
CHK: NCK	CHK: NCK	

SHEET NO B18 OF B21 SHEETS

BRIDGE NO 07557

S:\AE\B\Bluep\107252\5-dsgn\51-cadd\Cr152\bridge\cbr07557_b911.dgn CR 152 2/3/2010 7:19:01 AM

CONCRETE WEARING COURSE

☐ LOW SLUMP

☐ OTHER _____
TYPE OR MANUFACTURER

EXPANSION JOINTS

JOINT MANUFACTURER

MANUFACTURER'S IDENTIFICATION _____
MFR'S No. AND/OR LETTER DESIGNATION FOR JOINT USED

GLAND MANUFACTURER _____
NAME AND ADDRESS (CITY, STATE)

SIZE OF GLAND _____

MANUFACTURER'S IDENTIFICATION _____
MFR'S No. AND/OR LETTER DESIGNATION FOR GLAND USED

ELASTOMERIC BEARING PADS

PAD MANUFACTURER _____
NAME AND ADDRESS (CITY, STATE)

SPECIAL SURFACE FINISH

SYSTEM: _____ COLOR: _____

FINISHING ROADWAY FACES OF BARRIER RAILING

TYPE: _____ COLOR: _____

ANTI-GRAFFITI COATING

MANUFACTURER _____
NAME AND ADDRESS (CITY, STATE)

PRODUCT NAME: _____ LOCATION: _____

PAINT SYSTEM

Mn/DOT SPECIFICATION NUMBER _____
2478 OR 2479 OR OTHER

MANUFACTURER _____
NAME AND ADDRESS (CITY, STATE)

PRIME COAT _____
Mn/DOT MATERIAL SPECIFICATION NUMBER

INTERMEDIATE COAT _____
Mn/DOT MATERIAL SPECIFICATION NUMBER

FINISH COAT _____ _____
Mn/DOT MATERIAL SPECIFICATION NUMBER COLOR

PLAN QUALITY

RATE 1 (AGREE), 2 (NEUTRAL), OR 3 (DISAGREE, PLEASE COMMENT BELOW)

DIMENSIONING AND DETAILING ADEQUATELY DESCRIBED REQUIRED CONSTRUCTION. _____

BAR LISTS AND QUANTITIES WERE TYPICALLY COMPLETE AND FREE OF ERRORS. _____

SCALE OF DRAWINGS AND OVERALL LEGIBILITY OF LINES AND TEXT WAS GOOD. _____

(SB) SPECIAL PROVISIONS ADEQUATELY DESCRIBED SPECIAL WORK AND PAYMENT. _____

COMMENTS: _____

NUMBER OF BRIDGE SUPPLEMENTAL AGREEMENTS: _____ COST: $ _____

LIST SIGNIFICANT ERRORS OR OMISSIONS IN PLAN DETAILS OR PAY QUANTITIES IN THE SPACE PROVIDED AT RIGHT.

BRIDGE REMOVAL / BRIDGE OPENING

NUMBER OF AND DATE OLD BRIDGE WAS REMOVED (IF APPLICABLE):

BRIDGE NUMBER _____ DATE REMOVED _____

DATE NEW BRIDGE WAS OPENED TO TRAFFIC _____

NOTIFY THE BRIDGE OFFICE BRIDGE MANAGEMENT UNIT WITH THIS INFORMATION AS SOON AS POSSIBLE. (651) 366-4557

OTHER ITEMS ①

① UTILITIES ADDED DURING CONSTRUCTION AND SPECIALTY ITEMS.

FINAL QUANTITIES ENTERED ON SCHEDULE OF QUANTITIES: YES ☐ NO ☐

SUMMARY OF SIGNIFICANT AS-BUILT CHANGES

THE AS-BUILT INFORMATION WAS ADDED TO THE PLAN BY:

_____ _____
INSPECTOR(S) SIGNATURE DATE

CHECKED BY: _____ _____
PROJECT ENGINEER/SUPERVISOR SIGNATURE DATE

AT THE TIME OF THE FINAL, THIS COMPLETED AS-BUILT BRIDGE DATA SHEET MUST BE SUBMITTED TO THE BRIDGE OFFICE - ATTN: REGIONAL CONSTRUCTION ENGINEER (MS610).

REVISION: 10-28-2008

APPROVED: SEPTEMBER 26, 2003
STATE BRIDGE ENGINEER

AS-BUILT DETAILS
(AS NEEDED)

SEH
3535 VADNAIS CENTER DRIVE
ST PAUL, MN 55110
PHONE (651) 490-2000
FAX (651) 490-2150

I hereby certify that this plan, specification, or report was prepared by me or under my direct supervision and that I am a duly Licensed Professional Engineer under the laws of the state of Minnesota

Signature: Nathan C Klopp Date: 2-3-2010
Printed Name: NATHAN C KLOPP Reg. No. 43836

TITLE: AS-BUILT BRIDGE DATA

SAP NO 07-598-26

DES:	DR:	APPROVED:
CHK:	CHK:	

SHEET NO B19 OF B21 SHEETS

FIG. 5-397.900

BRIDGE NO 07557

S:\AE\B\Bluep\107252\5-dgn\51-cadd\Cr152\bridge\cbr07557_fig7900a.dgn CR 152 2/3/2010 7:19:02 AM

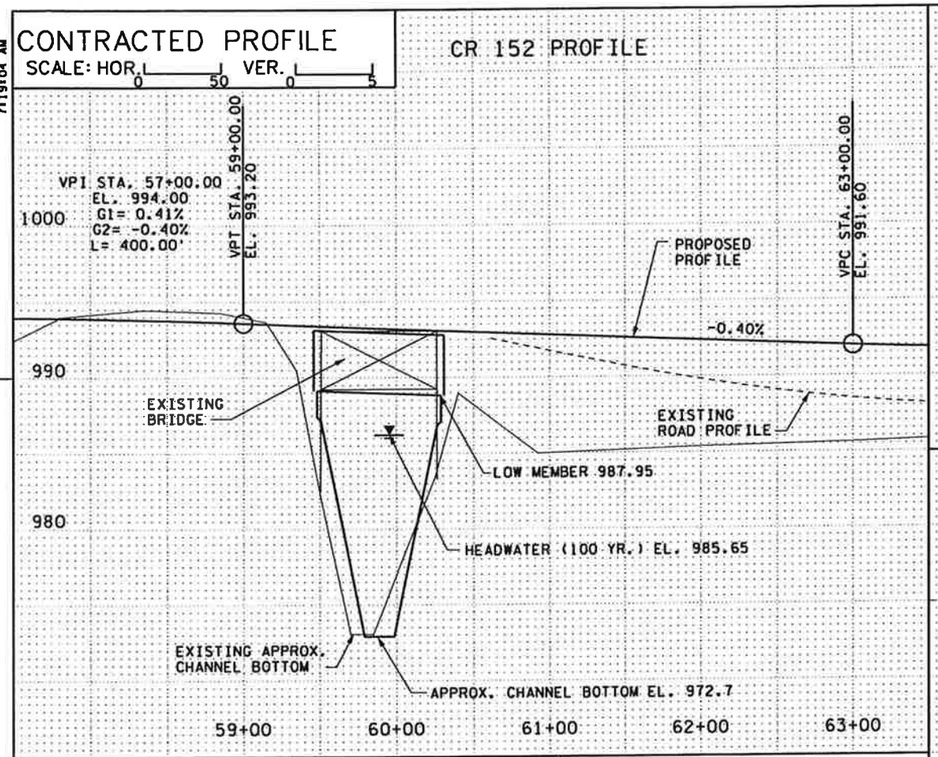

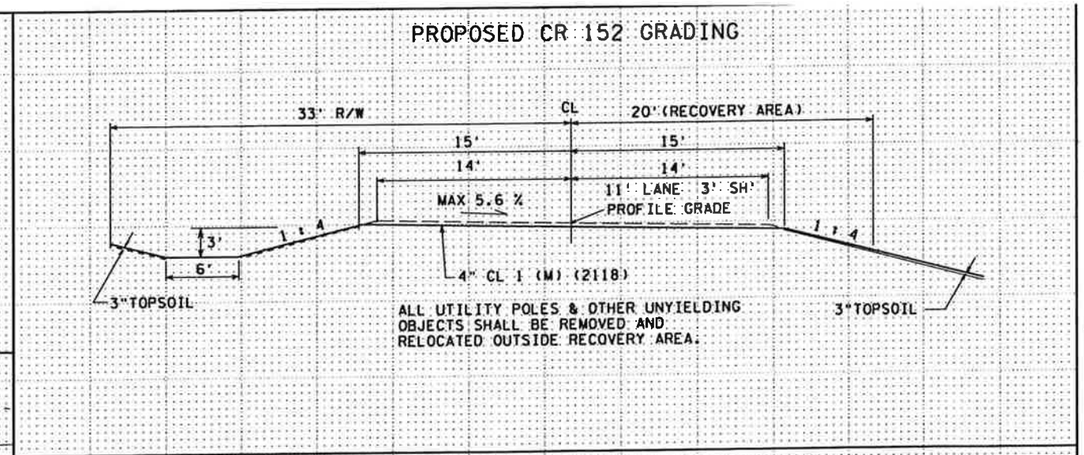

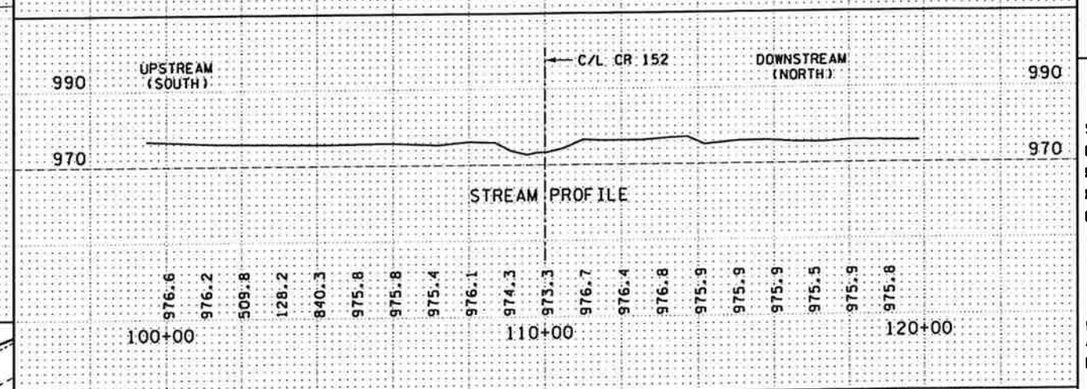

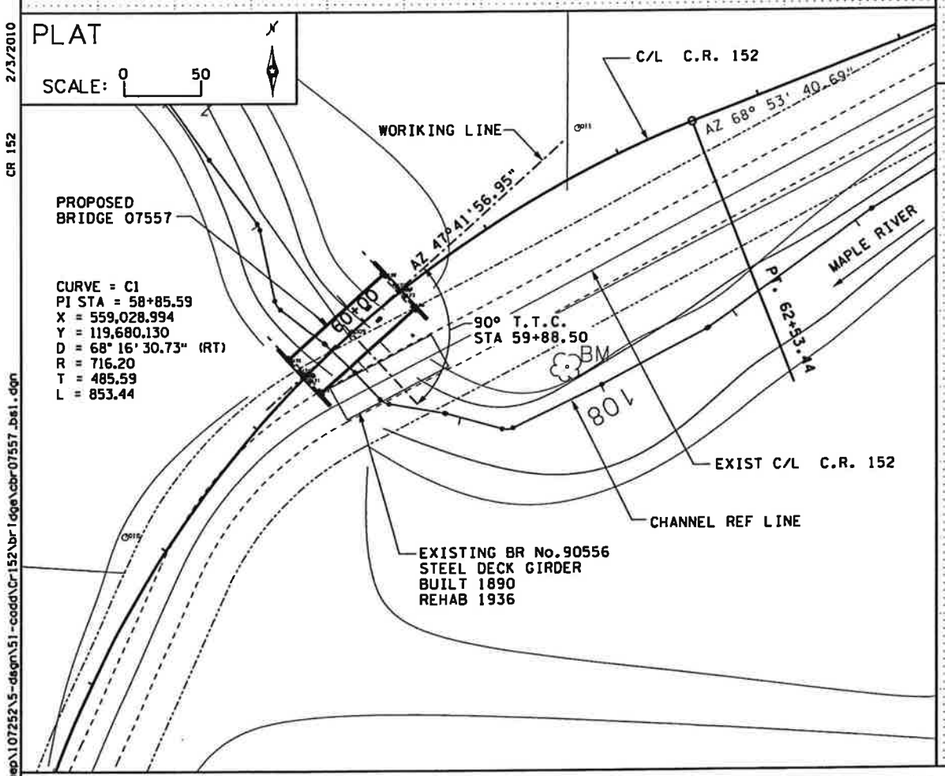

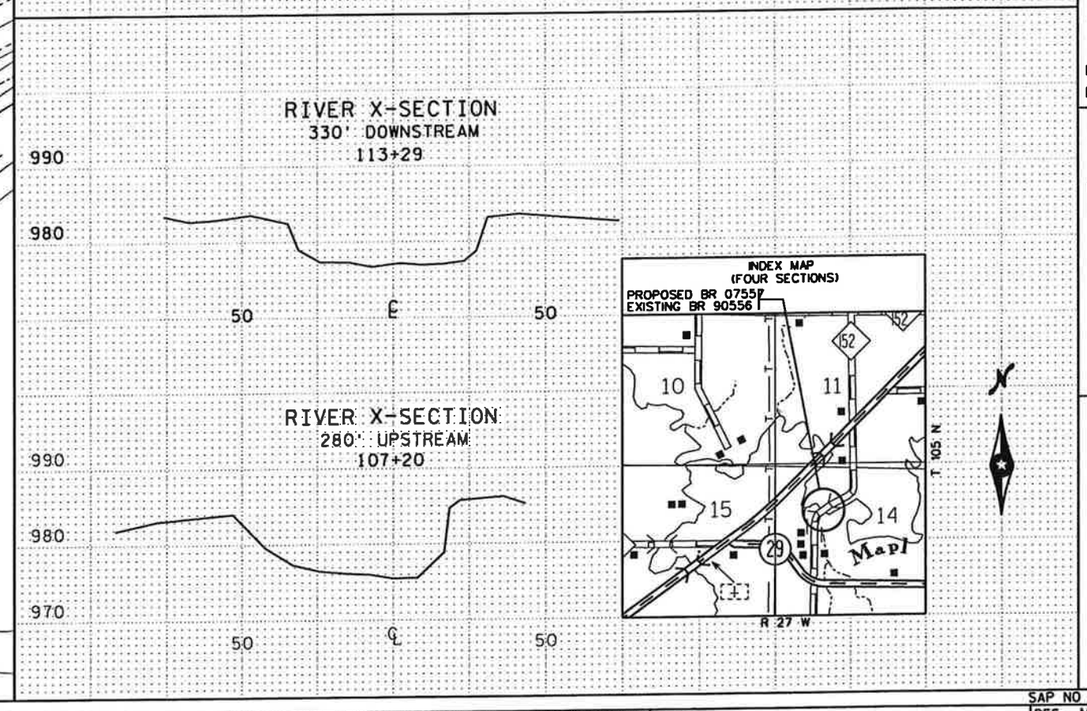

LOCATION ENGINEER'S OBSERVATIONS AT BRIDGE SITE

1. SPECIAL FEATURES: WATERFALLS, DAMS, FLOODS, ICE, DEBRIS, SLIDING BANKS, RECREATIONAL BOATING.

2. OTHER BRIDGES OR CULVERTS OVER THE SAME STREAM (PARTICULARLY STRUCTURES WHICH CARRY HIGH WATER WITHOUT OVERFLOW OF ROADWAY): GIVEN LOCATION, TYPE, LENGTH, HEIGHT ABOVE HIGH WATER, CROSS-SECTIONAL AREA ETC.

3. APPARENT HIGHWATER ELEVATION OBTAINED FROM:

4. OTHER DATA: APPROX. VELOCITY OF WATER AT TIME OF SURVEY.

HYDRAULIC ENGINEERS RECOMMENDATION

DATE: 8-21-2009

STREAM OR DITCH DESIGNATION: MAPLE RIVER
DRAINAGE AREA: 193.1 SQ. MI.
MAX. FLOOD ON RECORD: N/A C.F.S. (UNKNOWN)
MAXIMUM OBSERVED HIGHWATER ELEVATION: 988.7 FT.
DESIGN FLOOD (100 YR. FREQ.): 4780 C.F.S.
DESIGN STAGE ELEVATION: 985.65 FT.
DESIGN MEAN VELOCITY THROUGH STRUCTURE: 6.88 F.P.S.
TOTAL STAGE INCREASE: 0.57 FT.
LOW MEMBER AT OR ABOVE ELEVATION: 987.95 FT.
WATERWAY AREA REQUIRED BELOW ELEV. 985.88 = 694.30 SQ. FT. AT RIGHT ANGLES TO CHANNEL
BASIC FLOOD (100 YR. FREQ.): 4780 C.F.S.
STAGE ELEVATION: 985.65 FT.
TOTAL STAGE INCREASE: 0.57 FT.
MEAN VELOCITY THROUGH STRUCTURE: 6.88 F.P.S.
FLOWLINE ELEVATION: 972.7 FT. SKEW ANGLE: 0°
ESTIMATED DEPTH OF PIER SCOUR = N/A FT. (500 YR. FREQ.)

BRIDGE SURVEY SHEETS MADE FROM :
BLUE EARTH COUNTY SURVEY

BENCH MARK ELEVATION 987.62 (M.S.L. 1929 ADJ.)
NAME & LOCATION:
•60 SPK. IN TREE 105' RT. STA. 61+00

BRIDGE SURVEY

PROPOSED BRIDGE LOCATED
CR 152 OVER THE MAPLE RIVER
IN BLUE EARTH COUNTY

SEC 14 TWP 105 N R 27 W
STERLING TOWNSHIP BLUE EARTH CO

BRIDGE NO. 07557

SEH
3535 VADNAIS CENTER DRIVE
ST PAUL, MN 55110
PHONE (651) 490-2000
FAX (651) 490-2150

I hereby certify that this plan, specification, or report was prepared by me or under my direct supervision and that I am a duly Licensed Professional Engineer under the laws of the state of Minnesota
Signature: Nathan C Klopp Date: 2-3-2010
Printed Name: NATHAN C KLOPP Reg. No. 43836

TITLE: BRIDGE SURVEY

SAP NO 07-598-26

DES: MAW	DR: MAW	APPROVED:
CHK: JAJ	CHK: JAJ	

SHEET NO B20 OF B21 SHEETS

BRIDGE NO 07557

S:\AE\B\B1uep\107252\5-dsgn\51-cadd\Cr152\bridge\cbr07557_bsl.dgn
2/3/2010 7:19:04 AM
CR 152

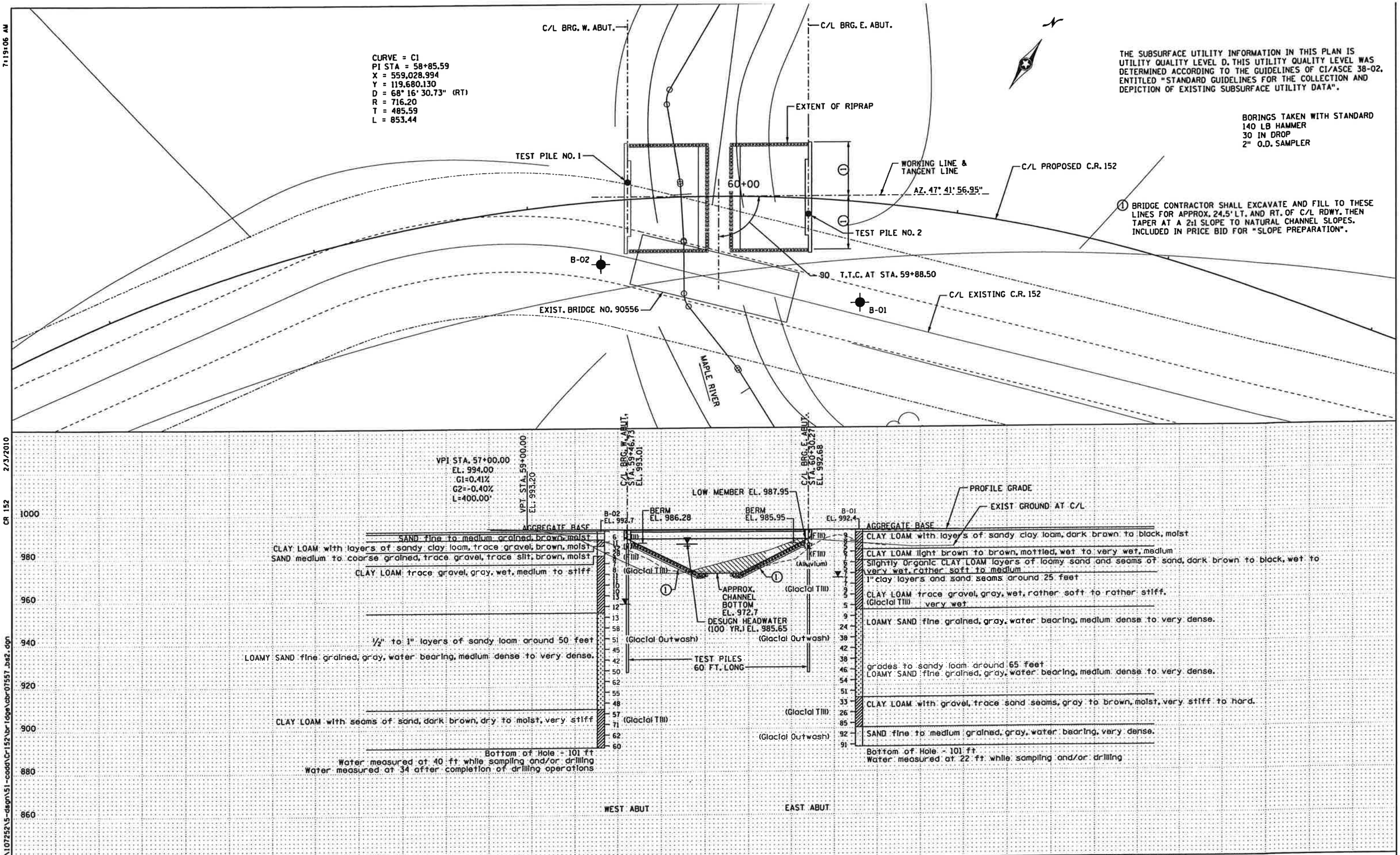

THE SUBSURFACE UTILITY INFORMATION IN THIS PLAN IS UTILITY QUALITY LEVEL D. THIS UTILITY QUALITY LEVEL WAS DETERMINED ACCORDING TO THE GUIDELINES OF CI/ASCE 38-02, ENTITLED "STANDARD GUIDELINES FOR THE COLLECTION AND DEPICTION OF EXISTING SUBSURFACE UTILITY DATA".

BORINGS TAKEN WITH STANDARD
140 LB HAMMER
30 IN DROP
2" O.D. SAMPLER

(1) BRIDGE CONTRACTOR SHALL EXCAVATE AND FILL TO THESE LINES FOR APPROX. 24.5' LT. AND RT. OF C/L RDWY. THEN TAPER AT A 2:1 SLOPE TO NATURAL CHANNEL SLOPES. INCLUDED IN PRICE BID FOR "SLOPE PREPARATION".

7:19:06 AM
2/3/2010
CR 152
S:\AE\B\Bluep\107252\5-dgn\51-cadd\Cr152\bridge\cbr07557_bs2.dgn

SEH
3535 VADNAIS CENTER DRIVE
ST PAUL, MN 55110
PHONE (651) 490-2000
FAX (651) 490-2150

I hereby certify that this plan, specification, or report was prepared by me or under my direct supervision and that I am a duly Licensed Professional Engineer under the laws of the state of Minnesota

Signature: Nathan C Klopp Date: 2-3-2010
Printed Name: NATHAN C KLOPP Reg. No. 43836

TITLE: BRIDGE SURVEY PLAN AND PROFILE

SAP NO 07-598-26

DES: MAW	DR: MAW	APPROVED:
CHK: JAJ	CHK: JAJ	

SHEET NO B21 OF B21 SHEETS

BRIDGE NO 07557