MINNESOTA DEPARTMENT OF TRANSPORTATION

BLUE EARTH COUNTY DEPARTMENT OF PUBLIC WORKS

CONSTRUCTION PLANS FOR BRIDGE, GRADING & SURFACE FOR BRIDGE 07593 STATE 07-598-27

ON COUNTY ROAD 164 0.5 MILES WEST OF CSAH 52
ABOUT 5 MILES NORTHEAST OF MAPLETON OVER THE BIG COBB RIVER
FROM 63' WEST OF E 1/4 SEC 25-106-26
TO 790' WEST OF THE CENTER SEC 30-106-25

GROSS LENGTH	1900	FEET	0.360	MILES
BRIDGE-LENGTH	70	FEET	0.013	MILES
NET LENGTH	1900	FEET	0.360	MILES

END SAP 07-598-27
STA 211+00

PROPOSED BRIDGE No. 07593
EXISTING BRIDGE No. 90559

BEGIN SAP 07-598-27
STA 192+00

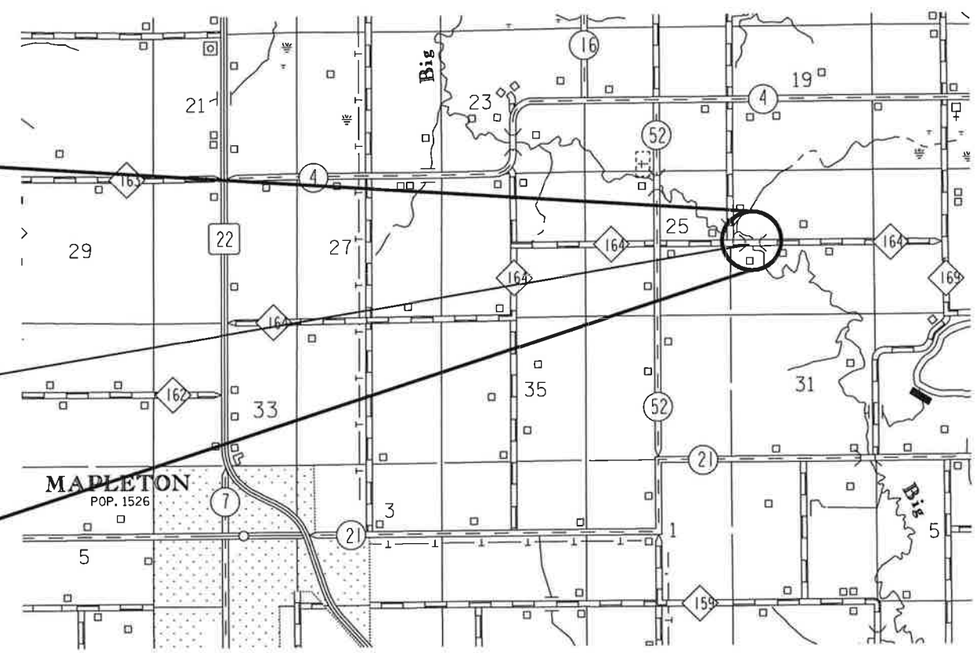

PROJECT LOCATION

BLUE EARTH COUNTY

DESIGN DESIGNATION

ADT (CURRENT YEAR) 2010 = 79
ADT (FUTURE YEAR) 2030 = 126
T (HEAVY COMMERCIAL)
5 TON DESIGN
R VALUE
SIGMA N 18
SOIL FACTOR 130

DESIGN SPEED MPH 40
BASED ON STOPPING SIGHT DISTANCE
HEIGHT OF EYE 3.5' - HEIGHT OF OBJECT 2.0'
DESIGN SPEED NOT ACHIEVED AT :
STA. TO STA. MPH
STA. TO STA. MPH

PLAN REVISIONS		
DATE	SHEET NO.	APPROVED BY

FOR PLANS AND UTILITIES SYMBOLS SEE TECHNICAL MANUAL

GOVERNING SPECIFICATIONS

THE 2005 EDITION OF THE MINNESOTA DEPARTMENT OF TRANSPORTATION "STANDARD SPECIFICATIONS FOR CONSTRUCTION" SHALL GOVERN.

INDEX OF SHEETS

SHEET No'S	1	TITLE
SHEET No'S	2	EST. QUANTITIES
SHEET No'S	3	TYPICAL SECTIONS
SHEET No'S	4	QUANTITES
SHEET No'S	5	ALIGNMENT DATA/UTILITY LOCATIONS
SHEET No'S	6	EROSION CONTROL QAUNTITIES
SHEET No'S	7-9	EROSION CONTROL DETAILS
SHEET No'S	10-12	EROSION CONTROL LAYOUT
SHEET No'S	13-14	PLAN PROFILE
SHEET No'S	15-21	X-SECTIONS
SHEET No'S	B1-B16	BRIDGE PLAN

THIS PLAN CONTAINS 37 SHEETS

SCALE

PLAN	100'	
PROFILE	100' HORIZ.	10' VERT.
INDEX MAP	1 MILE	
CROSS SECTIONS	10' HORIZ.	10' VERT.

THE SUBSURFACE UTILITY INFORMATION IN THIS PLAN IS UTILITY LEVEL D. THIS QUALITY LEVEL WAS DETERMINED ACCORDING TO THE GUIDELINES OF CI/ASCE 38-02, ENTITLED "STANDARD GUIDELINES FOR THE COLLECTION AND DEPICTION OF EXISTING SUBSURFACE UTILITY DATA."

UTILITIES

ONE CALL:	1-800-252-1166
ELECTRIC: BENCO	1-507-387-7963
TELEPHONE: HICKORY TECH	1-507-387-1730

ALL APPLICABLE FEDERAL, STATE AND LOCAL LAWS AND ORDINANCES WILL BE COMPLIED WITH , IN THE CONSTRUCTION OF THIS PROJECT.

I HEREBY CERTIFY THAT THIS PLAN, SPECIFICATION, OR REPORT WAS PREPARED BY ME OR UNDER MY DIRECT SUPERVISION AND THAT I AM DULY LICENSED PROFESSIONAL ENGINEER UNDER THE LAWS OF THE STATE OF MINNESOTA

COUNTY ENGINEER — ALAN FORSBERG

DATE 18 May 10 — LICENSE No. 14720

DIST. STATE AID ENG'R : REVIEWED FOR COMPLIANCE WITH STATE-AID RULES/POLICY — DATE: 4/2/10

STATE BRIDGE ENGINEER — DATE: 4/26/10

for STATE AID ENG'R : APPROVED FOR STATE-AID FUNDING — DATE: 5/4/10

SAP 07-598-27 CR 164 SHEET No. 1 OF 21 SHEETS

TITLE.dgn 3/17/2010 2:16:08 PM

THE FOLLOWING STANDARD PLATES, APPROVED BY THE FEDERAL HIGHWAY ADMINISTRATION, SHALL APPLY ON THIS PROJECT.

STANDARD PLATES

PLATE NO.	DESCRIPTION
3040 F	CORRUGATED METAL PIPE CULVERT
3123 J	METAL APRON FOR C.S. PIPE
3124 B	METAL APRON CONNECTION
3221 C	CORRUGATED STEEL PIPE COUPLING BAND
8000 I	STANDARD BARRICADES

STATEMENT OF ESTIMATED QUANTITIES

PAGE	ITEM No.	ITEM	UNIT	NON PARTIC. QUANTITY	TOTAL FINAL QUANTITY
4	2101.502	CLEARING	TREE	177	
4	2101.507	GRUBBING	TREE	150	
4	2104.501	REMOVE PIPE CULVERT	LIN. FT.	44	
4	2104.501	REMOVE FENCE	LIN. FT.	986	
4	2104.501	REMOVE GUARD RAIL	LIN. FT.	452	
4	2105.501	COMMON EXCAVATION	C. Y.	(P) 1,628	
4	2105.523	COMMON BORROW (EV)	C. Y.	10,000	
4	2105.535	SALVAGED TOPSOIL (EV)	C. Y.	2,500	
6	2105.505	SUBSOILING	ACRE	5	
4	2118.501	AGGREGATE SURFACING CL-1 (M)	TON	1,105	
4	2211.501	AGGREGATE BASE, CL-5	TON	240	
4	2357.502	BITUMINOUS MATERIAL FOR TACK COAT	GALLON	30	
4	2360.501	TYPE SP 19.0 WEARING COURSE MIXTURE (2,B)	TON	140	
	2442.501	REMOVE EXISTING BRIDGE	L. S.	1	
13	2501.511	18" C.S. PIPE CULVERT	LIN. FT.	42	
13	2501.515	18" GS PIPE APRON	EACH	2	
6	2511.501	RANDOM RIPRAP CL-III	C. Y.	10	
6	2573.502	SILT FENCE, TYPE HEAVY DUTY	LIN. FT.	327	
6	2573.502	SILT FENCE, TYPE MACHINE SLICED	LIN. FT.	792	
6	2573.505	FLOTATION SILT CURTAIN TYPE MOVING WATER	LIN. FT.	90	
6	2573.512	TEMPORARY DITCH CHECK, TYPE 2	LIN. FT.	195	
6	2573.513	TEMPORARY DITCH CHECK, TYPE 7	C.Y.	5	
6	2573.520	SEDIMENT REMOVAL, BACKHOE	HOURS	3	
6	2573.54	FILTER LOG, TYPE STRAW BIOROLL	LIN. FT.	327	
	2573.550	EROSION CONTROL SUPERVISOR	L.S.	1	
6	2573.602	TEMPORARY SEDIMENT TRAP	EACH	3	
6	2575.501	SEEDING	ACRE	4	
6	2575.502	SEED, MIXTURE 150	LBS.	36	
6	2575.502	SEED, MIXTURE 280	LBS.	148	
6	2575.511	MULCH MATERIAL TYPE 1	TON	8	
6	2575.519	DISC ANCHORING	ACRE	4	
6	2575.523	EROSION CONTROL BLANKETS, CATEGORY 4	SQ. YD.	1,224	
6	2575.532	COMMERCIAL FERTILIZER ANA 20-10-20	LBS.	1,037	
6	2575.560	HYDROLIC SOIL STABILIZER TYPE 5	LBS.	750	

PROPOSED BRIDGE WIDTH 28'

CR 164 GRADING

3" OF TOPSOIL WILL BE REQUIRED ON ALL DISTURBED AREAS.
QUANTITIES WILL BE INCIDENTAL TO COMMON EXC.

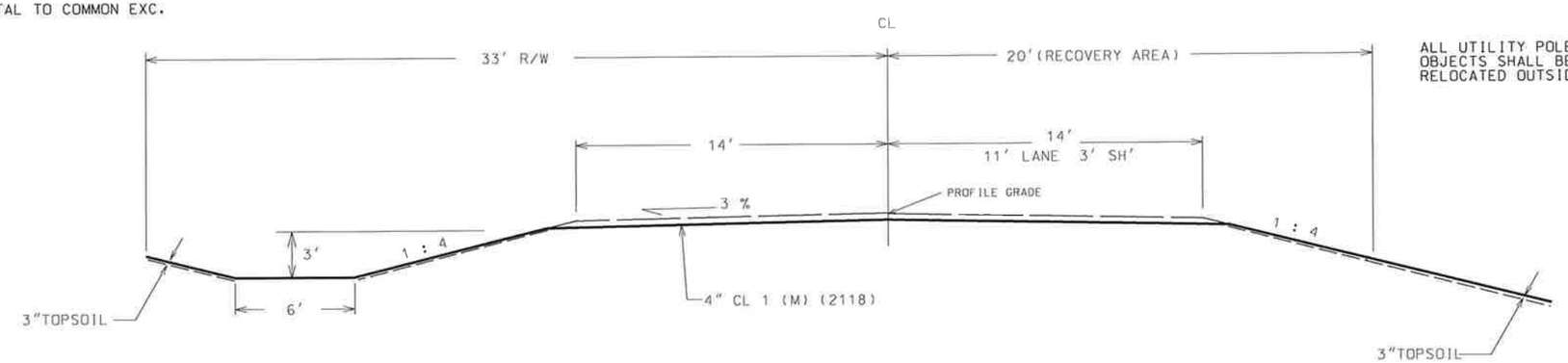

ALL UTILITY POLES & OTHER UNYIELDING OBJECTS SHALL BE REMOVED AND RELOCATED OUTSIDE RECOVERY AREA.

PROPOSED BITUMINOUS PAVEMENT SECTION

STA 198+65 TO 199+66
STA 200+38 TO 201+40

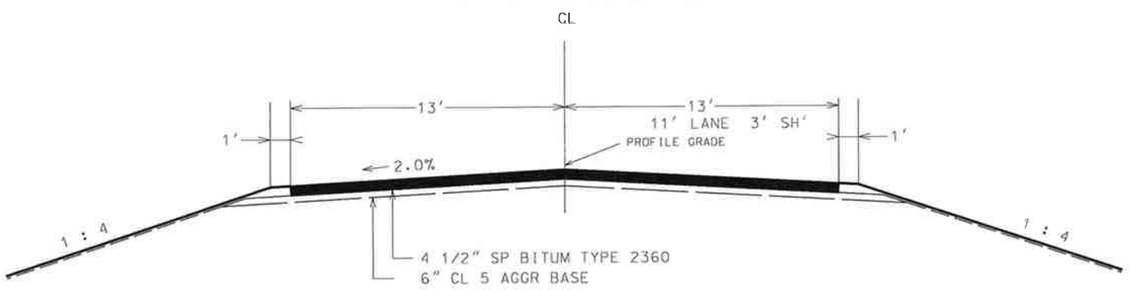

SUPER ELEVATED AGGREGATE SECTION

STA 194+79 TO 196+18
STA 201+43 TO 205+27
STA 206+59 TO 209+05

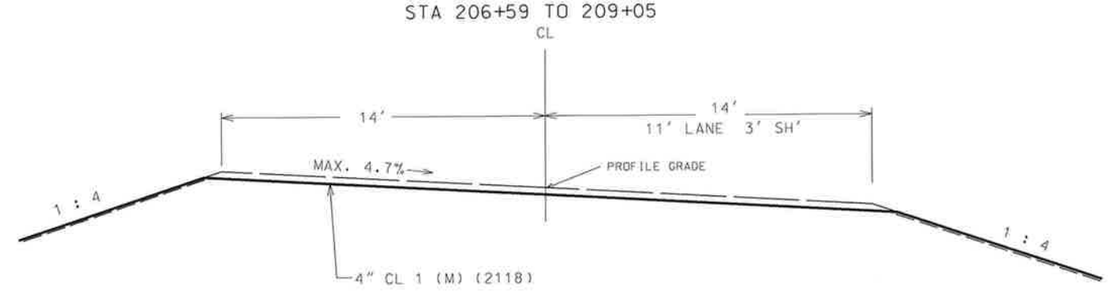

EXISTING CR 164

STA 188+00 TO 217+82

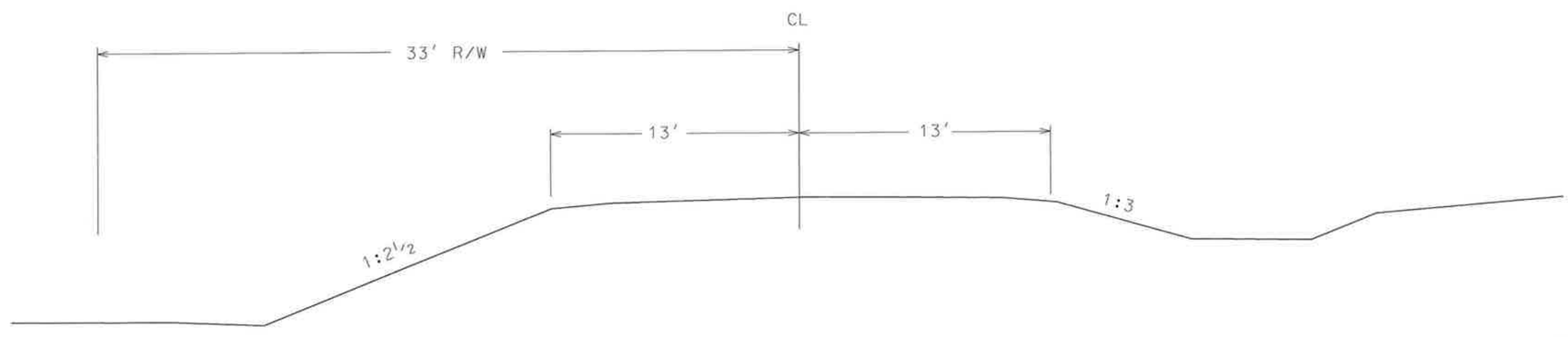

TYPICAL SECTIONS

CERTIFIED BY Alan Forsberg PROFESSIONAL ENGINEER LIC. NO. 14720 FEB. 19, 2010

typical.dgn 3/17/2010 2:17:01 PM

SURFACING & BASE QUANTITIES

LOCATION	LENGTH FEET	AVER WIDTH FEET	DEPTH INCHES	(1) AGGR. SURFACE CL 1 (M) TON	(1) AGGR. BASE CL 5 TON	(2) TACK COAT GAL	(3) SP BITUM TYPE 2360 TON
STA 192 + 0 TO STA 198 + 65	665	28	4	430			
STA 198 + 65 TO STA 199 + 67	102	33	6		120		
STA 198 + 65 TO STA 199 + 67	102	26	4.5			15	70
STA 200 + 37 TO STA 201 + 40	103	33	6		120		
STA 200 + 37 TO STA 201 + 40	103	26	4.5			15	70
STA 201 + 40 TO STA 211 + 0	960	28	4	630			
1 TWP RD ENTRANCES @ 30 TONS			4	30			
1 FIELD ENTRANCES @ 15 TONS			4	15			
TOTAL				1,105	240	30	140

(1) AGGREGATE CALCULATED AT 140 LBS. COMPACTED DRY PER CU. FT.
(2) BITUM. MAT'L FOR TACK COAT 0.05 GALS. PER SQ. YD.
(3) BITUM MIXTURE CALCULATED AT 110 LB PER SQ.YD. 1" DEEP

REMOVAL QUANTITIES

LOCATION	CLEAR TREE	GRUB TREE	REMOVE FENCE LIN. FT.	REMOVE PIPE CULVERT LIN. FT	REMOVE GUARD RAIL LIN. FT
STA 192 + 92 TO STA 196 + 50 LT			363		
STA 197 + 57 TO STA 198 + 45 LT			89		
STA 197 + 60 TO STA 200 + 0 LT	17	12			
STA 198 + 33 TO STA 199 + 66 LT					150
STA 199 + 55 TO STA 199 + 75 RT					25
STA 199 + 55 TO STA 199 + 75 RT					25
STA 198 + 30 CL INP 18" x 44' RC PIPE				44	
STA 200 + 18 TO STA 201 + 68 LT					152
STA 200 + 16 TO STA 201 + 15 RT					100
STA 200 + 40 TO STA 205 + 0 LT	46	36			
STA 200 + 20 TO STA 209 + 0 RT	114	102			
STA 202 + 88 TO STA 205 + 55 RT			272		
STA 205 + 99 RT			44		
STA 206 + 81 TO STA 209 + 5 RT			218		
TOTAL	177	150	986	44	452

EARTH WORK QUANTITIES

STA	Common Exc Cu.Yds.	Emb Cu.Yds.
192+60	0	0
193+00	20	25
194+00	55	327
195+00	8	631
196+00	25	695
196+60	35	362
197+00	35	211
197+57	52	289
198+00	31	223
198+30	18	169
199+00	59	317
199+38	31	79
199+67	17	69
199+80	5	24
sub total	391	3421
200+15	0	0
200+37	7	52
201+00	27	306
202+00	12	614
203+00	113	803
204+00	231	795
204+25	57	161
205+00	129	617
205+50	98	496
206+00	123	420
207+00	240	484
208+00	160	136
209+00	34	167
210+00	3	189
211+00	3	64
212+00	0	0
sub total	1237	5304
TOTALS	1628	8,725

STA	Salvage Topsoil Cu.Yds.	Common Borrow Cu.Yds.
0+50	0	0
1+00	297	598
1+50	564	1706
2+00	509	2217
2+50	490	2114
3+00	544	1881
3+50	583	1330
3+75	144	227
Total	3131	10073

	COMMON EXC C.Y.	Emb C.Y.	
CR 152	1,628	8,725	
BORROW	10,000		
	11,628	8,725	TOTALS
BALANCE	1.33 %		

NOTE: ALL AGGREGATE ON EXISTING ROAD SHALL BE SALVAGED AND USED AS PIPE BEDDING AND FOR LOCAL ACCESS THIS WORK SHALL BE INCIDENTAL TO COMMON EXCAVATION.

P:\CR\164\Bridge\[Tabulations.xls]A

CERTIFIED BY Alan Forsberg REG. NO. 14720 FEB. 19, 2010

QUANTITES

ALIGNMENT DATA

PI #		PI STA	A	Curve	Tan	Radius	LC	SUPER	NORTHING	EASTING	AZ	DISTANCE
CR 164												
BOP		188+00.00							139903.33	599159.87	NE89.^30'24"	462.99
1		192+62.99							139907.32	599622.84	NE89^39'21"	286.17
	PC	194+79.53							139908.62	599839.37		
2	PI	195+49.16	7^18'06" Rt	5^15'	69.63	1091.35	139.08	4.7%	139909.03	599909.01	SE83^02'32"	788.53
	PT	196+18.61							139900.60	599978.13		
	PC	201+43.25							139837.05	600498.91		
3	PI	203+37.51	20^11'07" Lt	5^15'	194.26	1091.35	384.48	4.7%	139813.51	600691.73	NE76^46'20"	449.46
	PT	205+27.73							139857.96	600880.84		
	PC	206+59.72							139888.17	601009.32		
4	PI	207+82.94	12^53'01" Rt	5^15'	123.22	1091.35	245.40	4.7%	139916.36	601129.27	NE89^39'21"	1218.10
	PT	209+05.12							139917.10	601252.49		
EOP		220+00.00							139923.68	602347.35		

UTILITY LOCATIONS

STATION	LOCATION	INPLACE	REMARKS
BENCO ELECTRIC			
192 + 30	33' RT	POWER POLE	
195 + 76	47' RT	POWER POLE	
199 + 0	25' RT	POWER POLE	RELOCATE
HICKORY TECH			
199 + 6	24' RT	TEL. PED.	RELOCATE
199 + 6 RT TO 192 + 36 LT		TEL. CABLE	RELOCATE
199 + 6 RT TO 210 + 00 LT		TEL. CABLE	RELOCATE
199 + 6 RT TO 210 + 00 RT		TEL. CABLE	RELOCATE

EROSION CONTROL

STATION TO STATION (1)	LOCATION (1)	REMARKS	RIP-RAP TYPE III	SILT FENCE HVY DUTY	SILT FENCE MACH. SLICED	FLOATATION SILT CURTAIN TYPE MOVING WATER	DITCH CHECK TYPE 2	DITCH CHECK TYPE 7	SEDIMENT REMOVAL BACKHOE	BIOLOG	SEDIMENT TRAP
			CU. YD.	LIN. FT	LIN. FT	LIN. FT	LIN. FT.	CU. YD.	HOURS	LIN. FT	EACH
			(5)	(3)	(3)			(4)		(3)	
192 + 0 TO 199 + 73	RT						105	5	1		1
192 + 0 TO 199 + 92	LT			158	316					158	
199 + 75	RT		10								
200 + 0	RIVER - LT					90					
200 + 38 TO 202 + 43	LT			53	106					53	
200 + 38 204 + 77	RT			116	233					116	
205 + 0 TO 208 + 0	RT						60				
207 + 0 TO 208 + 0	LT						30				
BORROW SITE					137				2		2
		TOTALS	10	327	792	90	195	5	3	327	3

(1) STATION AND LOCATIONS ARE TO BE USED AS A GUIDE
VERIFY QUANTITIES & LOCATIONS IN THE FIELD.

(2) BASIS OF PAYMENT SPECIFIED IN SPEC. 1903 SHALL BE MODIFIED FOR EROSION CONTROL ITEMS TO PRECLUDE ANY PRICE ADJUSTMENT FOR INCREASED OR DECREASED QUANTITIES.

(3) SILT BARRIERS TYPE CHOSEN TO BEST FIT FIELD CONDITIONS. FOR BIDDING PURPOSES QUANTITIES ARE ESTIMATED

(4) ROCK DITCH CHECK WERE ESTIMATED AT APPROX. 2.5 CY PER DITCH CHECK

(5) MIN. 6" FILTER AGGREGATE SHALL BE PLACED UNDER RIP-RAP. FILTER AGGREGATE INCIDENTAL TO RIP-RAP.

TURF ESTABLISHMENT

LOCATION	LIMITS FROM SHOULDER	AREA	SEEDING	SEEDING MIX # 150 40 LBS / ACRE	SEEDING MIX # 280 50 LBS / ACRE	MULCH TYPE1 2 TON / ACRE	DISK ANCHOR	CAT. 4 EROSION CONTROL BLANKET	FERTILIZER 20-10-20 350# / ACRE	HYDRAULIC SOIL STABILIZER TYPE 5 EST @ 2100# / ACRE
		SQ. F.T	ACRE	LBS	LBS	TON	ACRES	SQ. YD.	LBS	LBS
192 + 0 TO 199 + 66 RT	RIGHT OF WAY	26,086	0.6		29.9	1.2	0.6	269.0	210	
192 + 0 TO 199 + 66 LT	RIGHT OF WAY	24,791	0.6		28.5	1.1	0.6	66.0	199	
200 + 38 TO 211 + 0 RT	RIGHT OF WAY	35,095	0.8		40.3	1.6	0.8		282	
200 + 39 TO 211 + 0 LT	RIGHT OF WAY	43,091	1.0		49.5	2.0	1.0	889	346	
BORROW SITE / TOPSOIL BERM	TEMP EASEMENT	12,320				0.6				
TEMPORARY EROSION CONTROL	ESTIMATED AS NEEDED		0.9	35.6		1.8	0.9			750
	TOTALS		4	36	148	8	4	1,224	1,037	750

SUMMARY OF IMPERVIOUS & PERVIOUS
(NPDES PERMIT)

	Disturbed area	Before Construction (Impervious)	Before Construction Pervious	After Construction (Impervious)	After Construction Pervious
total sq ft.	191,136	49,400	141,736	53,200	137,936
Acres	**4.4**	**1.1**	**3.3**	**1.2**	**3.2**

SUBSOIL

LOCATION	ACRES
BORROW SITE CLAY	2.3
BORROW SITE TOPSOIL	2.3
HAUL ROAD	0.3
TOTAL	5

CHARTS

CERTIFIED BY Alan Forsberg LIC. NO. 14720 Feb. 19, 2010

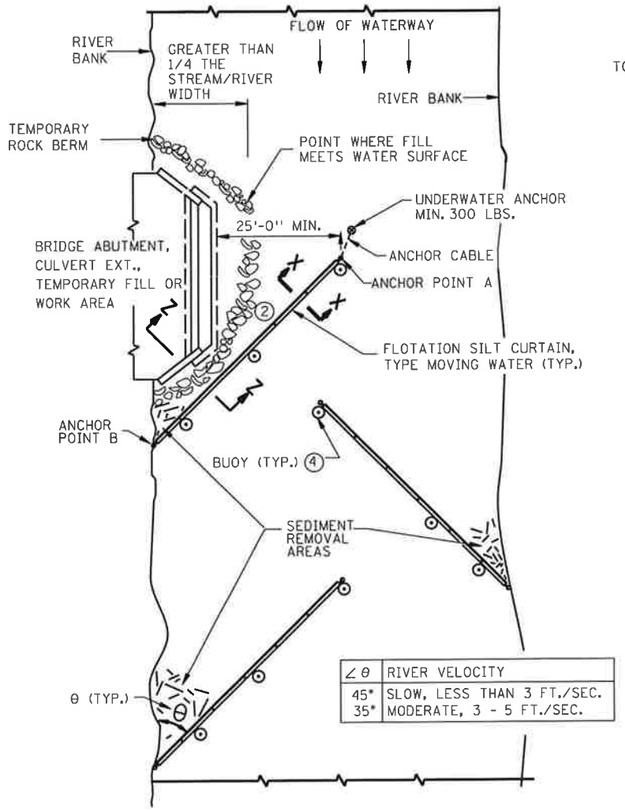

PLAN VIEW (TYPE: MOVING WATER)

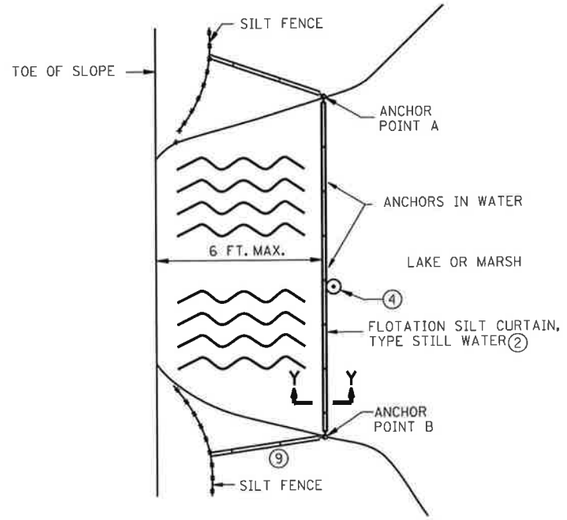

PLAN VIEW (TYPE: STILL WATER)

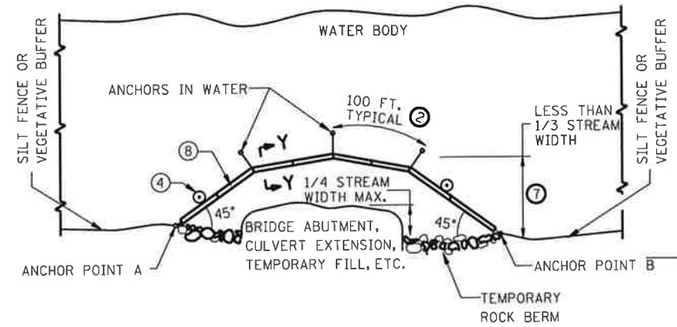

PLAN VIEW (TYPE: WORK AREA)

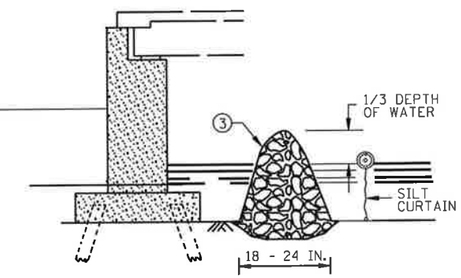

SECTION Z-Z TEMPORARY ROCK BERM
FOR SEDIMENT CONTROL

DESIGN GUIDELINES: MOVING WATER

WHEN TEMPORARY FILL ENCROACHES MORE THAN 1/4 BUT LESS THAN 1/3 WIDTH OF THE STREAM.
MINIMUM WATER DEPTH: 3 FT.
MAXIMUM WATER DEPTH: 11 FT.
MAXIMUM WATER VELOCITY: 5 FT./SEC.
1 6

DESIGN GUIDELINES: WORK AREA

WHEN TEMPORARY FILL ENCROACHES LESS THAN 1/4 OF THE WIDTH OF STREAM.
MAXIMUM WATER DEPTH: 10 FT.
MAXIMUM WATER VELOCITY: 5 FT./SEC.

DESIGN GUIDELINES: STILL WATER 6

MINIMUM WATER DEPTH: 0 FT.
MAXIMUM WATER DEPTH: 10 FT.

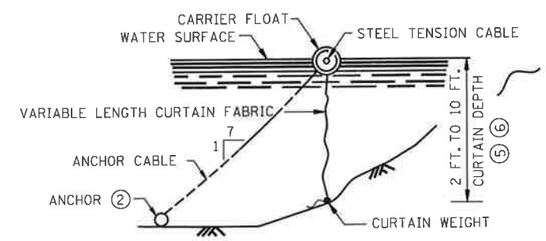

SECTION Y-Y

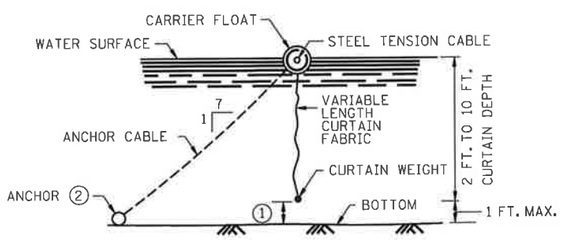

SECTION X-X

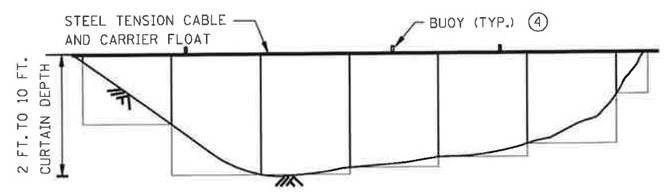

FLOTATION SILT CURTAIN - TYPE: WORK AREA AND STILL WATER 5

FOR CONTAINING OVERFLOWS FROM WEIRS, STANDPIPES, SETTLING PONDS

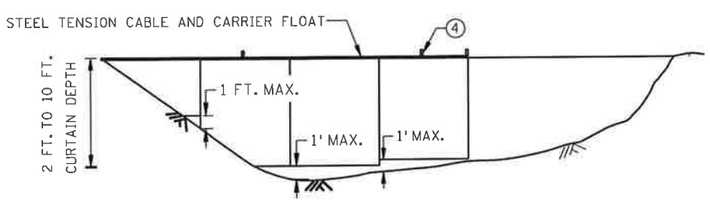

FLOTATION SILT CURTAIN - TYPE: MOVING WATER 5

USE FOR SMALLER RIVERS
WITH SLOW AND MODERATE VELOCITIES

NOTES:

SEE SPECS. 2573 & 3887.

1. CURTAIN EXTENDS TO 1 FT. MAXIMUM FROM BOTTOM OF WATER BODY.
2. FOR ANCHOR AND WEIGHT REQUIREMENTS, SEE SPEC. 2573.
3. IN AREAS WHERE THE PLAN CALLS FOR RIPRAP AT THE BRIDGE, A TEMPORARY ROCK BERM WILL BE USED TO PROVIDE ADDITIONAL PROTECTION. THE TEMPORARY ROCK BERM IS INCIDENTAL FOR WHICH NO DIRECT PAYMENT WILL BE MADE.
4. ON U.S. COAST GUARD OR OTHER MOTORIZED WATERWAYS, BUOYS ARE REQUIRED TO MARK THE ENDS AND SPECIAL AREAS FOR VISIBILITY. PLACE BUOYS AS REQUIRED FOR NAVIGATIONAL PURPOSES.
5. WATER DEPTH CAN BE 0 TO 10 FEET, 0 TO 11 FEET FOR TYPE MOVING WATER.
6. SILT CURTAIN HEIGHT INCLUDES MAXIMUM WAVE HEIGHT FOR WATER BODY.
7. KEEP AS CLOSE TO WORK AREA AS POSSIBLE.
8. SILT CURTAIN, ROCK BERM OR SHEET PILE AS REQUIRED TO CONTROL THE INFILTRATION OF SILT.
9. IF 6 INCHES OR LESS OF WATER, USE BALE BARRIERS, SEE SHEET 2.

STANDARD SHEET NO. 5-297.405 (1 OF 4)	TITLE: TEMPORARY SEDIMENT CONTROL SILT CURTAIN
STANDARD APPROVED: SEPTEMBER 27, 2006	

SAP 07-598-27 CR 164 SHEET NO 7 OF 21 SHEETS

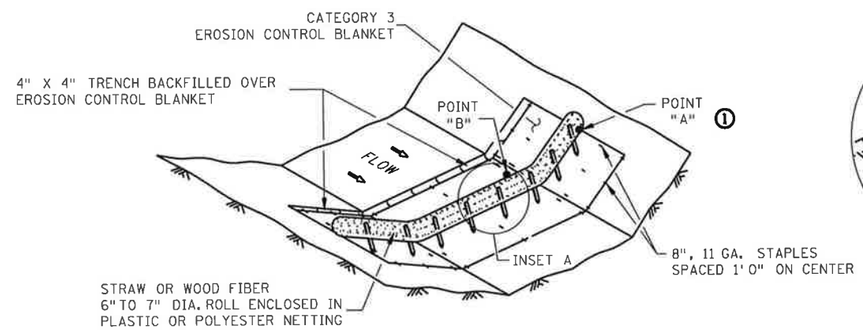

TYPE 3: BIOROLL BLANKET SYSTEM DITCH CHECK

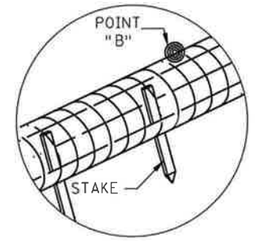

INSET A

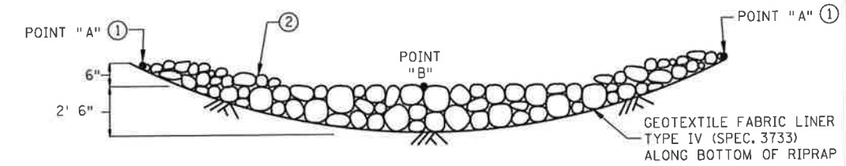

CROSS SECTION (ROCK WEEPER AND ROCK CHECK)

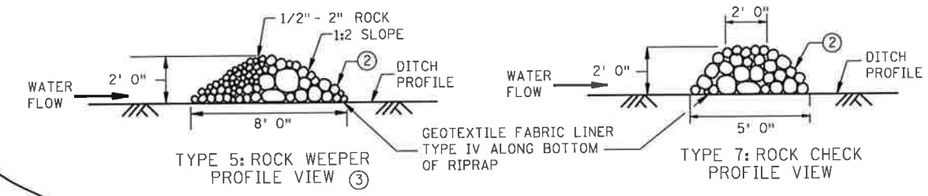

TYPE 5: ROCK WEEPER
PROFILE VIEW ③

TYPE 7: ROCK CHECK
PROFILE VIEW

TYPE 5: ROCK WEEPER AND
TYPE 7: ROCK CHECK DITCH CHECKS ④

USE ON ROUGH GRADED AREAS

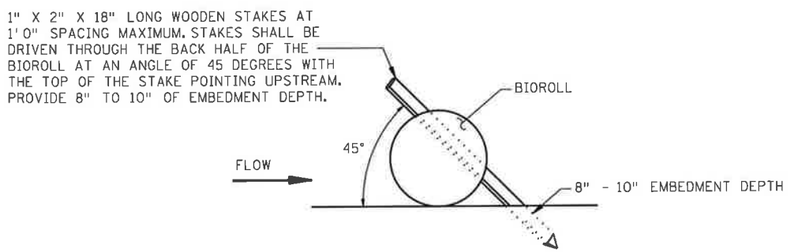

BIOROLL STAKING DETAIL

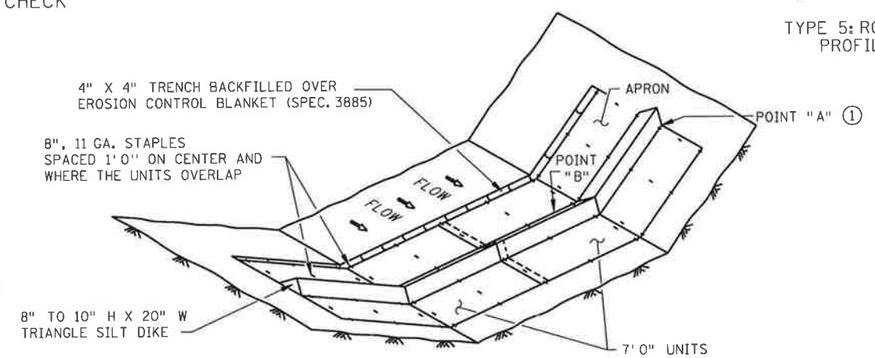

TYPE 6: GEOTEXTILE TRIANGULAR DIKE DITCH CHECK

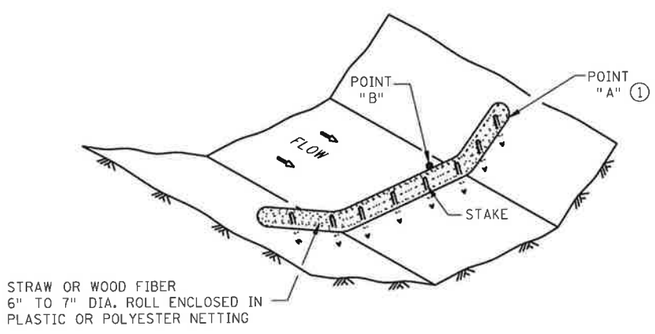

TYPE 2: BIOROLL DITCH CHECK

USE ON ROUGH GRADED AREAS

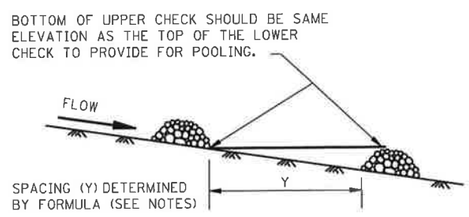

DITCH CHECK SPACING ④

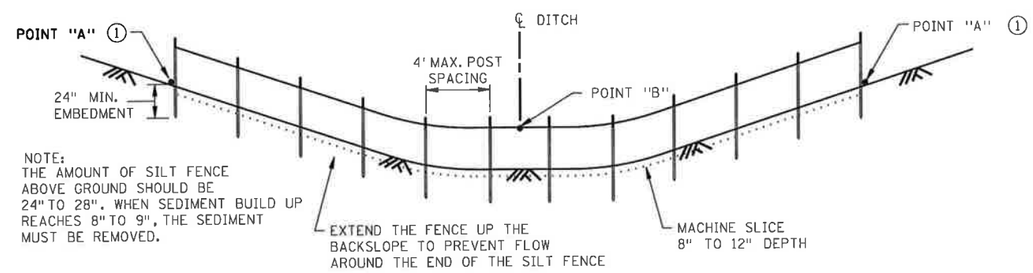

TYPE 1: SLICED IN SILT FENCE DITCH CHECK

NOTES:

SEE SPECS. 2573, 3601, 3733, 3885, 3886 & 3889.

APPROXIMATE SPACING BETWEEN EACH DITCH CHECK SHOULD BE DETERMINED FROM THE FOLLOWING SPACING FORMULA:

$$\text{APPROXIMATE SPACING OF DITCH CHECKS (FT.)} = Y = \frac{\text{DITCH CHECK HEIGHT (FT)}}{\text{\% CHANNEL SLOPE}} \times 100$$

① POINT "A" MUST BE A MINIMUM OF 6 INCHES HIGHER THAN POINT "B" TO ENSURE THAT WATER FLOWS OVER THE DIKE AND NOT AROUND THE ENDS.

② CLASS I - IV RIPRAP (SPEC. 3601) WITH GEOTEXTILE FABRIC LINER, TYPE IV (SPEC. 3733).

③ THE ROCK WEEPER FILTERS SEDIMENT OUT OF THE WATER BETTER THAN THE OTHER DITCH CHECKS. THE ROCK WEEPER COULD BE USED AS A PERMANENT WATER FILTERING FEATURE.

④ PERMANENT ROCK DITCH CHECKS PLACED WITHIN THE CLEAR ZONE WILL NEED TO BE 18" OR LESS IN HEIGHT. A 1:6 APPROACH AND DEPARTURE SLOPE SHALL BE PROVIDED.

GENERAL DESIGN GUIDELINES

DITCH CHECK TYPE	SILT FENCE	BIOROLL	BIOROLL BLANKET	TRIANGULAR DIKE	ROCK WEEPER	ROCK CHECK
STORM FREQUENCY:	2 YR. - 24 HR.	2 YR. - 24 HR.	2 YR. - 24 HR.	2 YR. - 24 HR.	5 YR. - 24 HR.	5 YR. - 24 HR.
MAX. FLOW VELOCITY:	< 1 FT./SECOND	1.5 FT./SECOND	4.5 FT./SECOND	1.5 FT./SECOND	12 FT./SECOND	12 FT./SECOND
MAX. DITCH GRADE:	0% - 0.5%	1.5% - 3%	1.5% - 3%	1.5% - 2.0%	3% - 5%	3% - 5%
MAX. DRAINAGE AREA:	1 ACRE	2 ACRE	2 ACRE	4 ACRE	4+ ACRE	4+ ACRE

STANDARD SHEET NO.
5-297.405 (3 OF 4)
STANDARD APPROVED:
SEPTEMBER 27, 2006

TEMPORARY SEDIMENT CONTROL
DITCH CHECK/BARRIER

SAP 07-598-27 CR 164 SHEET NO. 8 OF 21 SHEETS

s405_3_spn.dgn 3/17/2010 2:27:06 PM

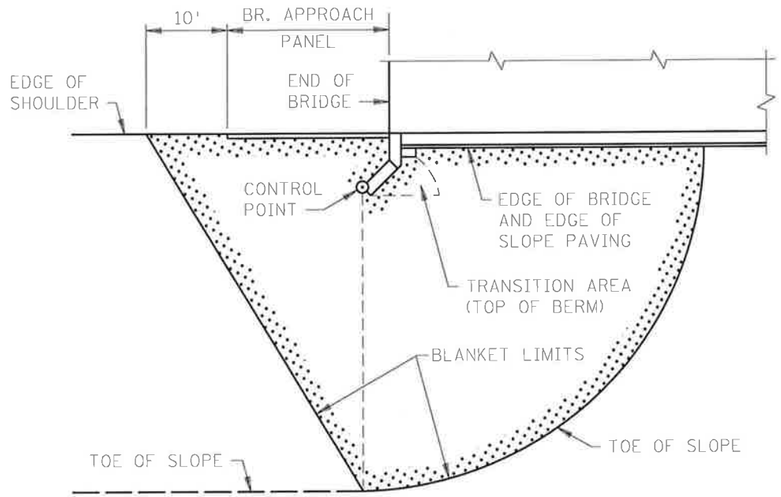

PLAN

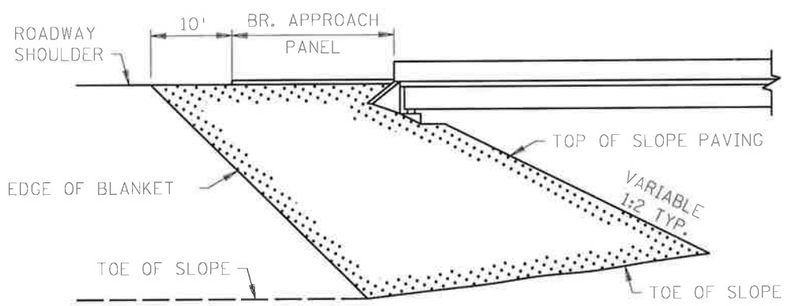

ELEVATION

BLANKET LIMITS AT BRIDGE APPROACH FILLS

TEMPORARY SEDIMENT TRAP

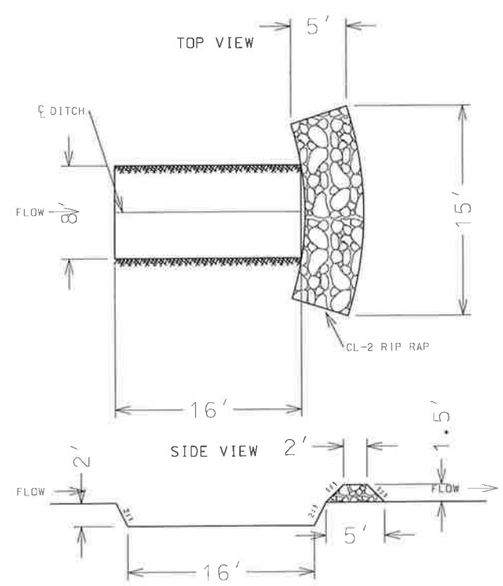

NOTE: ALL EXCAVATION AND RIP RAP INCLUDED IN BID ITEM 2573.602 TEMPORARY SEDIMENT TRAP

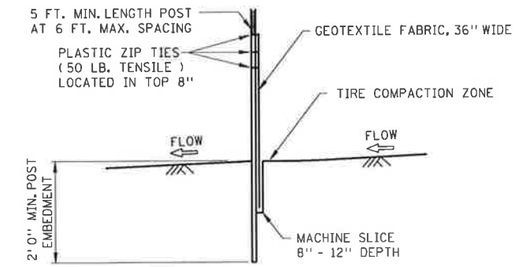

SILT FENCE, MACHINE SLICED

DESIGN GUIDELINES:
TO PROTECT AREAS FROM SHEET FLOW.
MAXIMUM CONTRIBUTING AREA: 1 ACRE.

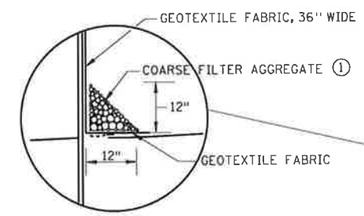

OPTIONAL METHOD
FOR SILT FENCE, HEAVY DUTY

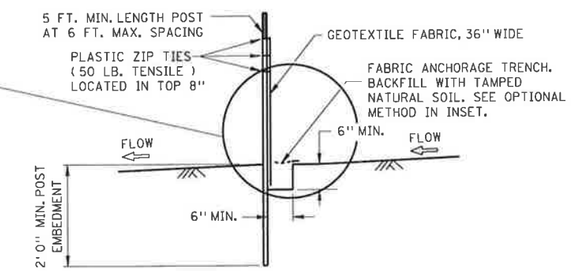

SILT FENCE, HEAVY DUTY
(HAND INSTALLED)

DESIGN GUIDELINES:
TO PROTECT AREAS FROM SHEET FLOW.
MAXIMUM CONTRIBUTING AREA: 1 ACRE.

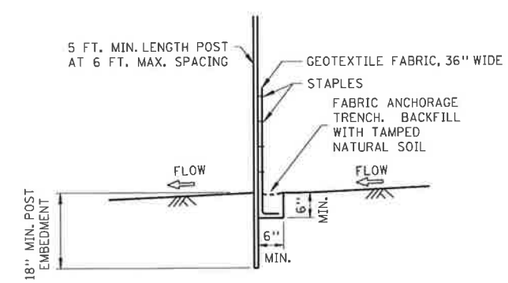

SILT FENCE, PREASSEMBLED

DESIGN GUIDELINES:
TO PROTECT AREAS FROM SHEET FLOW.
MAXIMUM CONTRIBUTING AREA: 1 ACRE.

NOTES:

SEE SPECS. 2573, 3149 & 3886.

① COARSE FILTER AGGREGATE (SPEC. 3149) SHALL BE INCIDENTAL.

TEMPORARY EROSION CONTROL

CERTIFIED BY Alan Forsberg ALAN FORSBERG REG. NO. 14720 PROFESSIONAL ENGINEER FEB. 19, 2010

SAP 07-598-27 CR 164 SHEET 9 OF 21 SHEETS

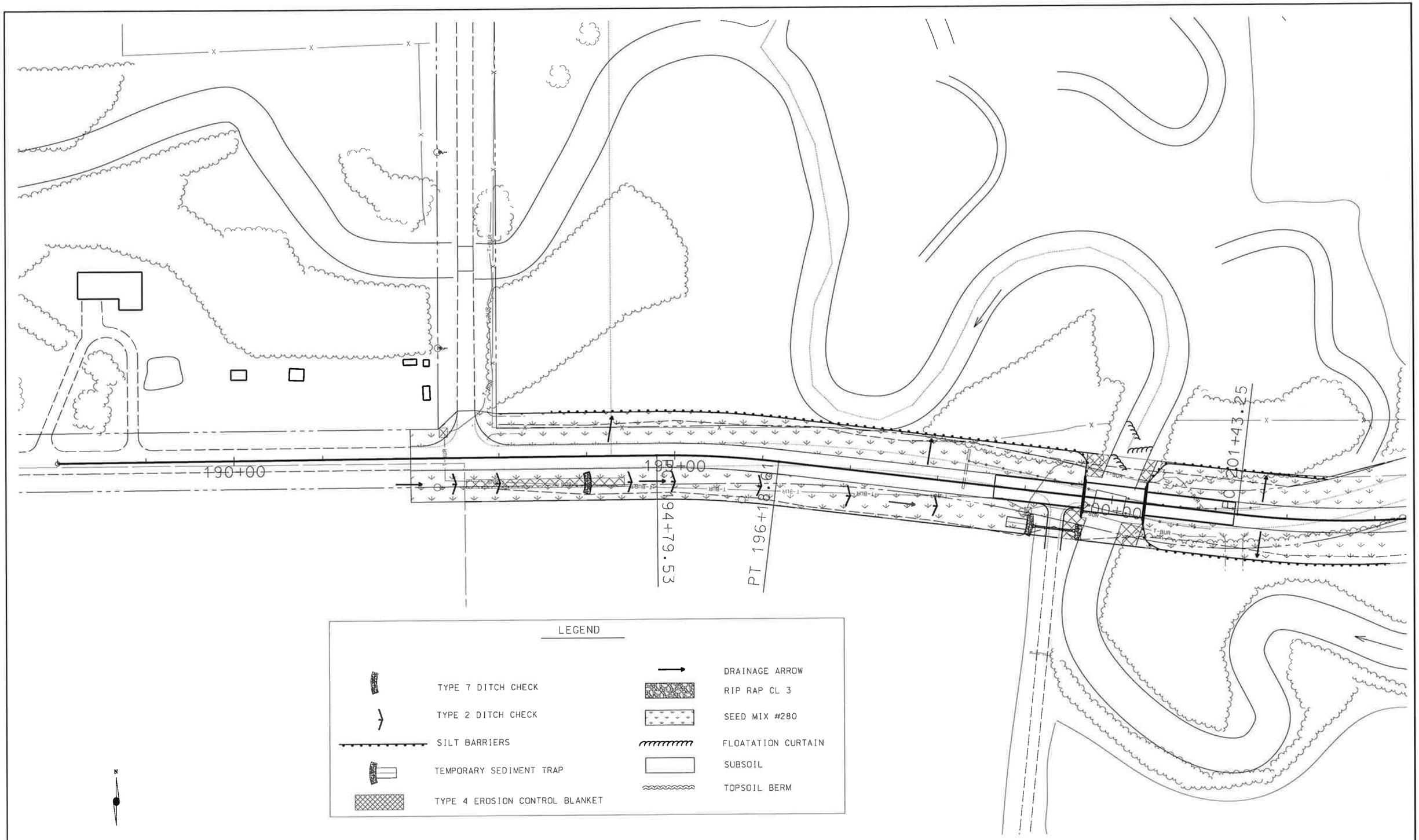

EROSION CONTROL & TURF ESTABLISHMENT

CERTIFIED BY Alan Forsberg LIC. NO. 14720 PROFESSIONAL ENGINEER FEB. 19, 2010

SAP 07-598-27 CR 164 SHEET 10 OF 21 SHEETS

Const.dgn 3/17/2010 2:28:26 PM

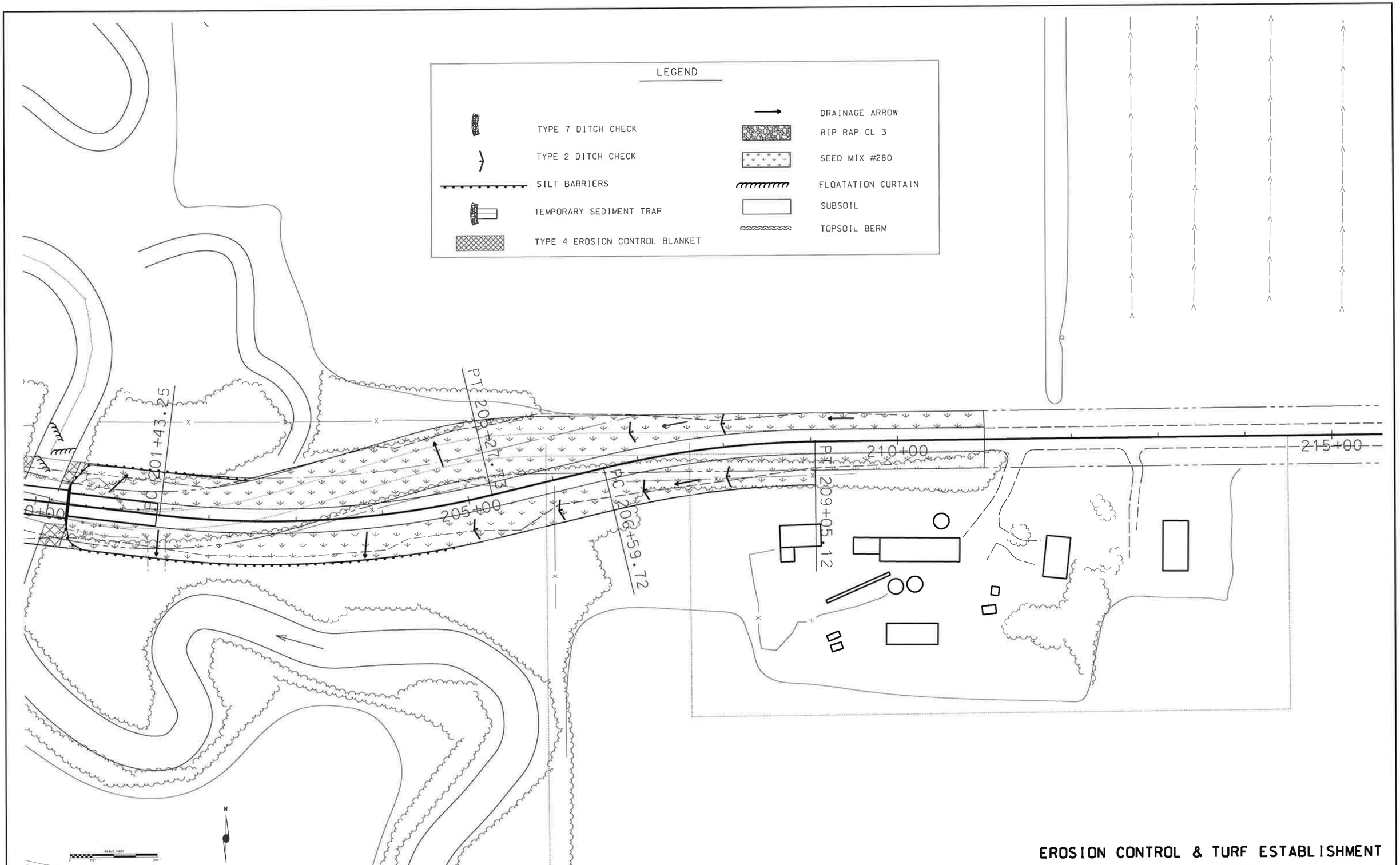

EROSION CONTROL & TURF ESTABLISHMENT

CERTIFIED BY Alan Forsberg LIC. NO. 14720 PROFESSIONAL ENGINEER FEB. 19, 2010

SAP 07-598-27 CR 164 SHEET 11 OF 21 SHEETS

Const2.dgn 3/17/2010 2:29:56 PM

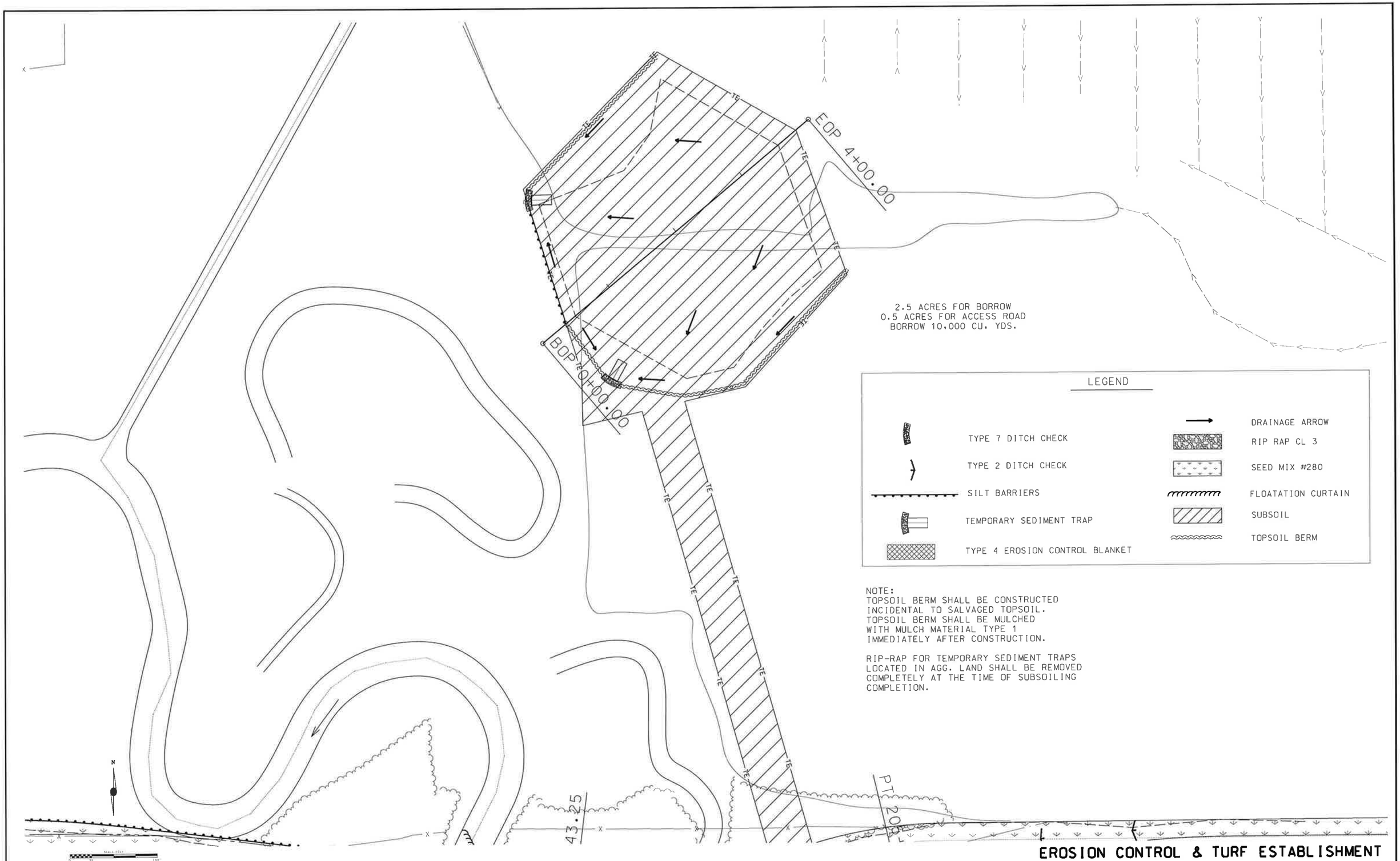

EROSION CONTROL & TURF ESTABLISHMENT

CERTIFIED BY Alan Forsberg LIC. NO. 14720 PROFESSIONAL ENGINEER FEB. 19, 2010

SAP 07-598-27 CR 164 SHEET 12 OF 21 SHEETS

Const3.dgn 3/3/2011 9:20:21 AM

ALL UNDERGROUND UTILITIES
LOCATIONS ARE APPROXIMATE

B RIVER

SCHU

DOWNSTREAM 1/4 MILE
ON TWP RD
BR. No. L-5679
STEEL BEAM SPAN
BUILD 1915

JAEGER NICKY & GAIL J

BIG COBB RIVER

END CO. PROJ 864
STA 211+00

CR 164 - 140 ST

190+00 195+00 200+00 205+00 210+00 215+00 220+00

PT 194+79.53
PT 196+18.61
PC 201+43.25
PT 208+27.13
PC 208+59.72
PT 209+05.12

STA 199+40 RT
18" x 42' CS
+ 2 APRONS

EXISTING BRIDGE
No. 90559
CONCRETE DECK GRID
BUILT 1920

BEGIN CO. PROJ 864
STA 192+00

N

RD STEVEN C

KRENGEL DAVID & JACOBUS BEVERLY

UPSTREAM 2 MILE
ON CSAH 21
BR. No. 07530
PRECAST CHANNEL SPAN
BUILD 1972

UPSTREAM 1 1/4 MILE
ON TWP RD T-602 (605 AVE)
OUTLET FOR COTTONWOOD LAKE
60" CS PIPE

DAVIS FAMILY DAIRIES LLC

DAVIS FAMILY DAIRIES LLC

SCALE
0 100 200

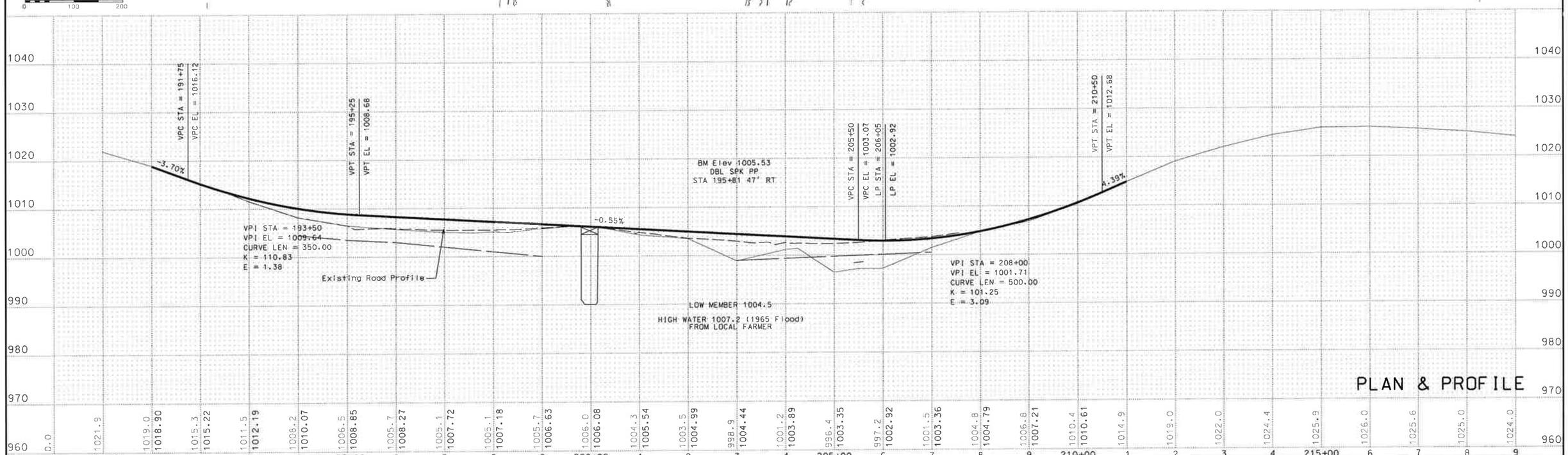

PLAN & PROFILE

CERTIFIED BY Alan Forsberg PROFESSIONAL ENGINEER LIC. NO. 14720 APRIL, 1 2010

SAP 07-598-27 CR 164 SHEET 13 OF 21 SHEETS

RCP01003.DGN 4/1/2010 11:11:22 AM

ALL UNDERGROUND UTILITIES
LOCATIONS ARE APPROXIMATE

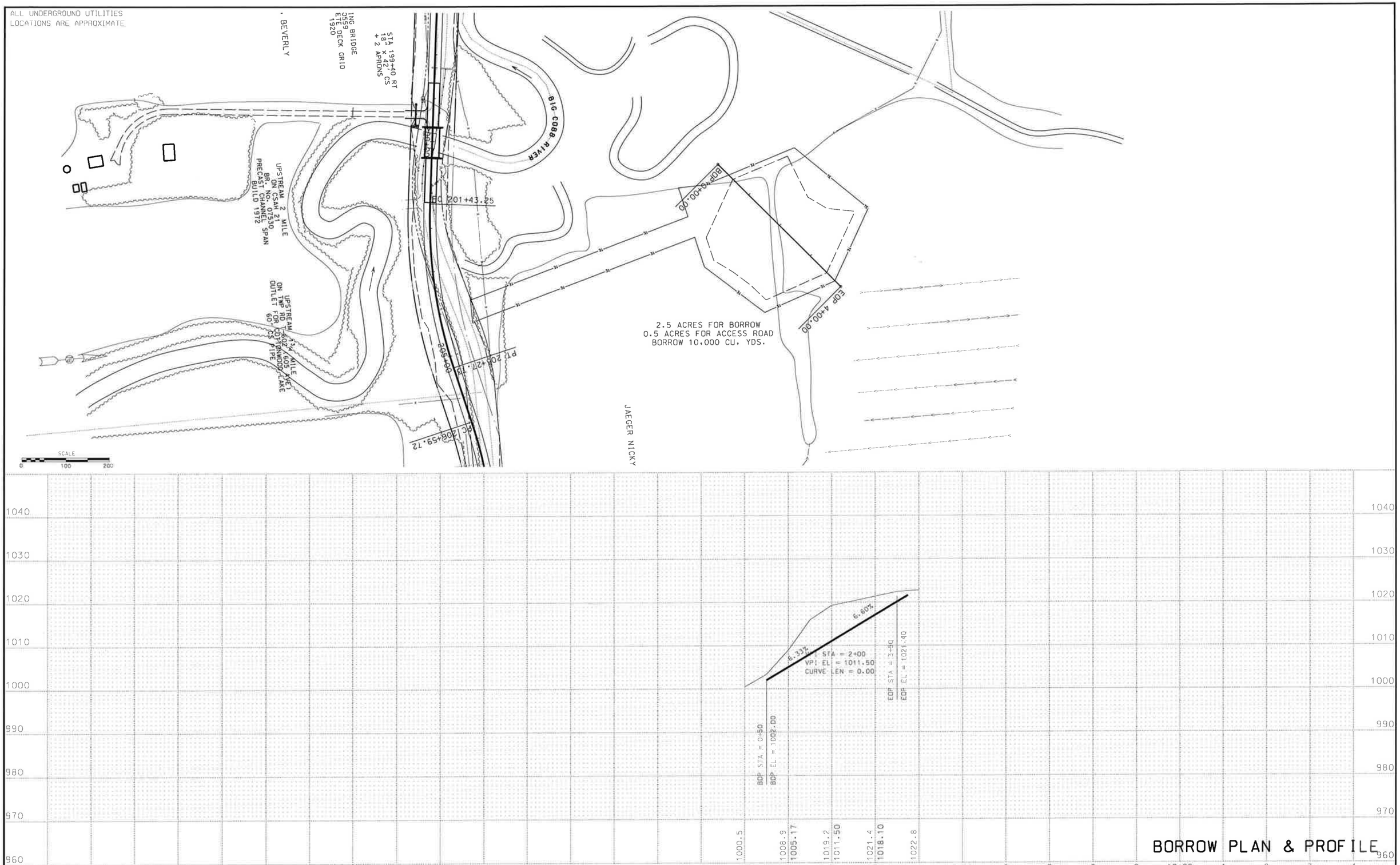

BORROW PLAN & PROFILE

CERTIFIED BY Alan Forsberg PROFESSIONAL ENGINEER LIC. NO. 14720 APRIL, 1 2010

SAP 07-598-27 CR. 164 SHEET 14 OF 21 SHEETS

RCp01005.dgn 3/3/2011 9:23:32 AM

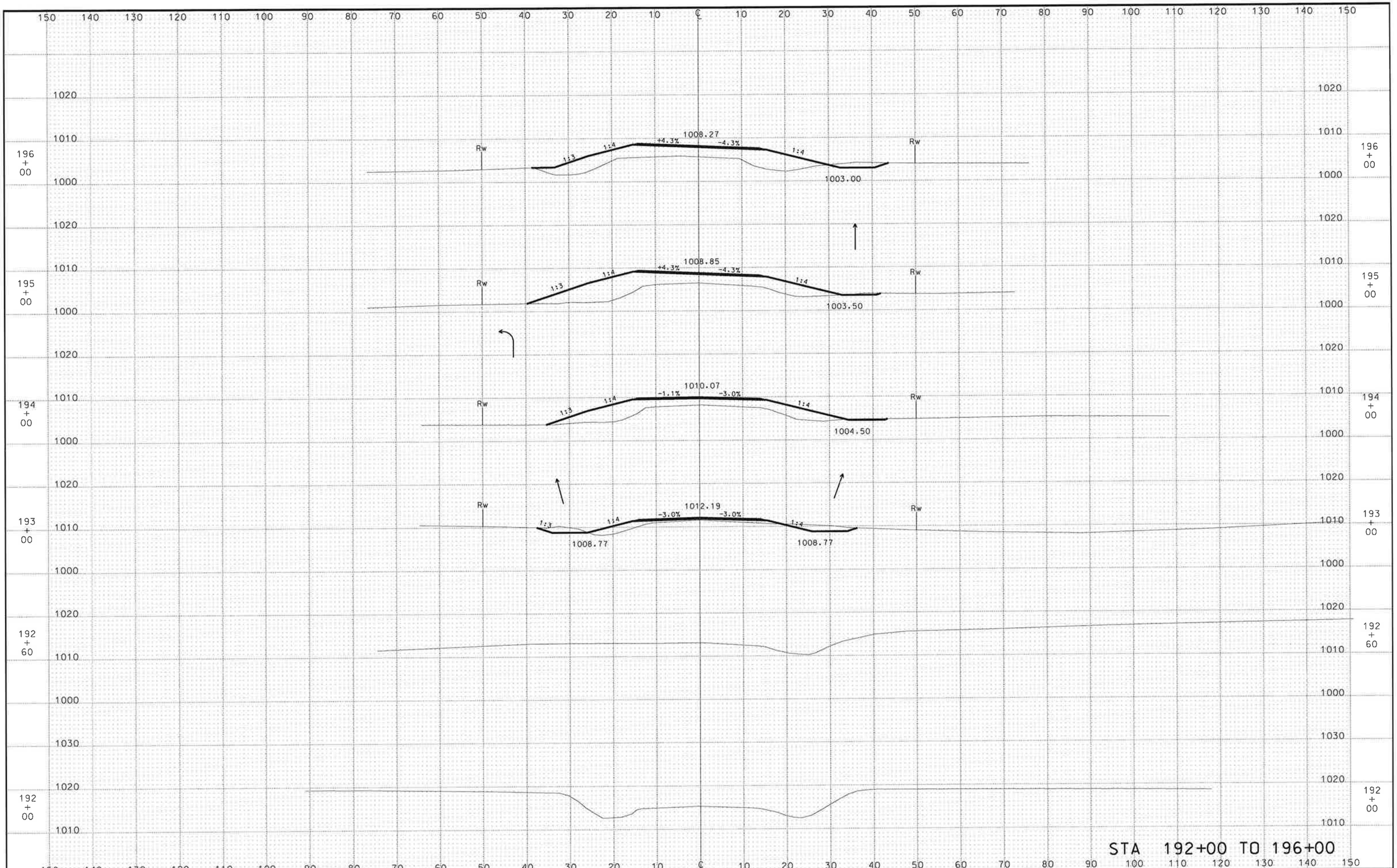

rc001003.dgn 3/17/2010 2:31:40 PM

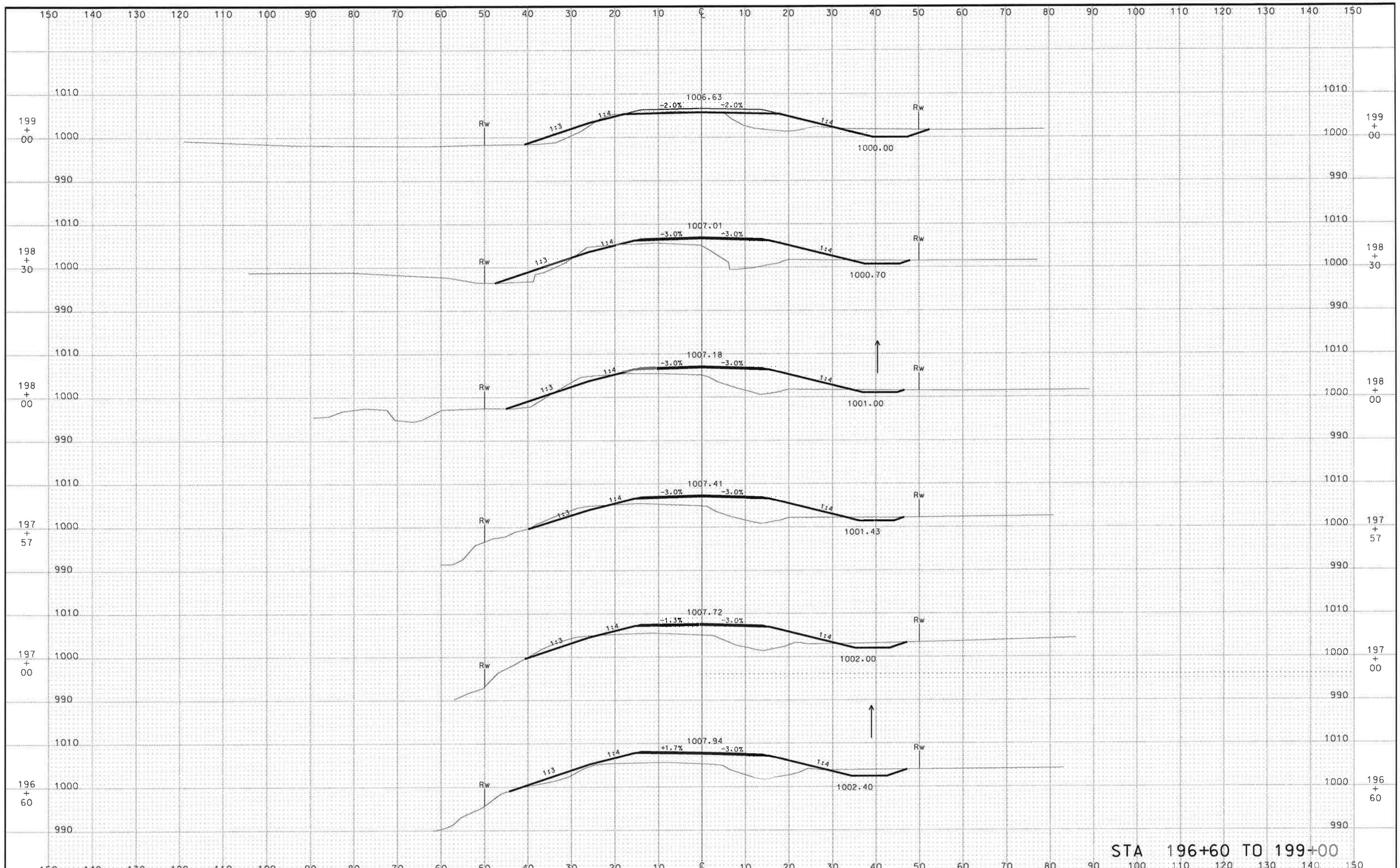

SAP 07-598-27 CR 164 SHEET 16 OF 21 SHEETS

rc002003.dgn 3/17/2010 2:32:00 PM

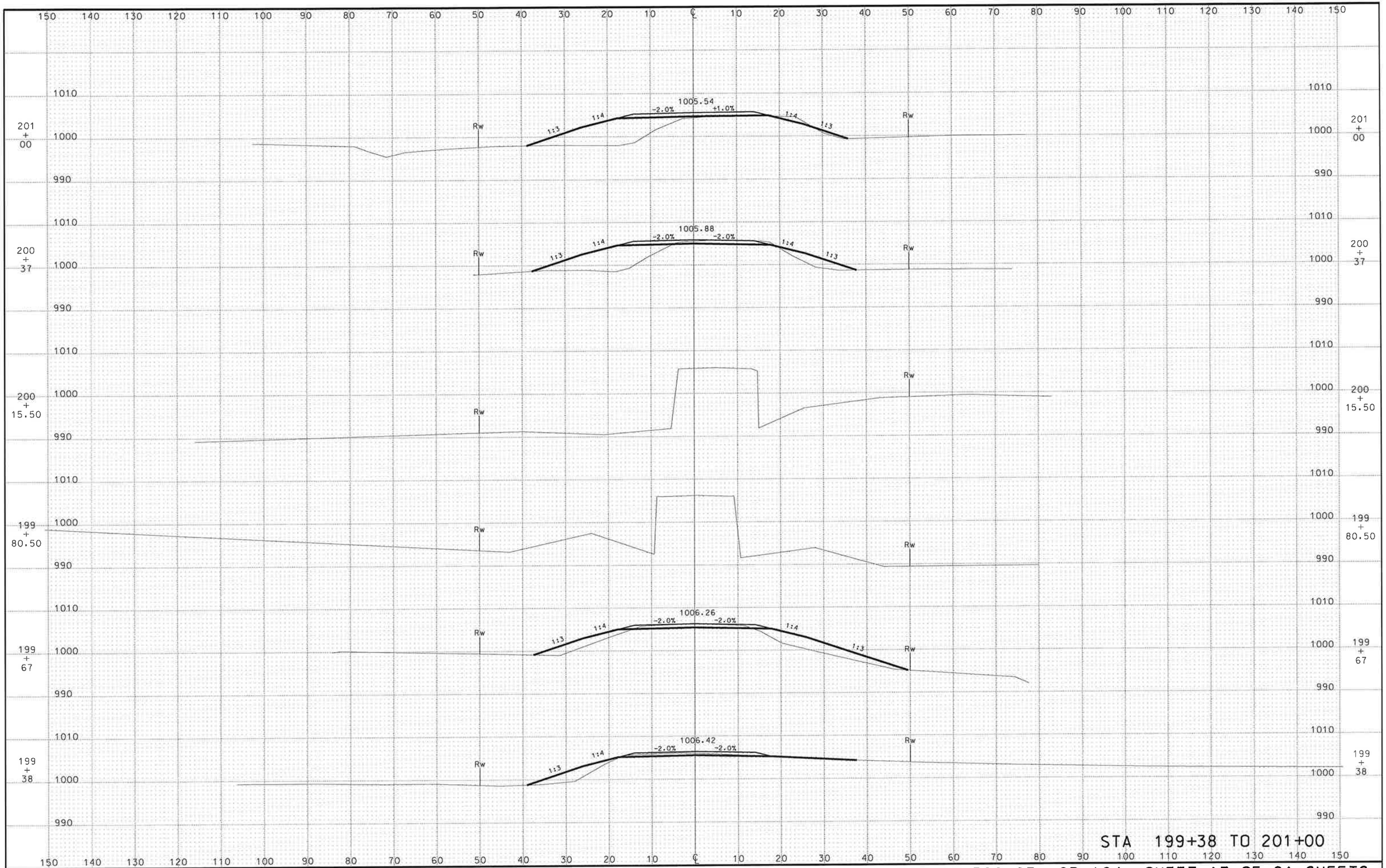

SAP 07-598-27 CR 164 SHEET 17 OF 21 SHEETS

rc003003.dgn 3/17/2010 2:32:16 PM

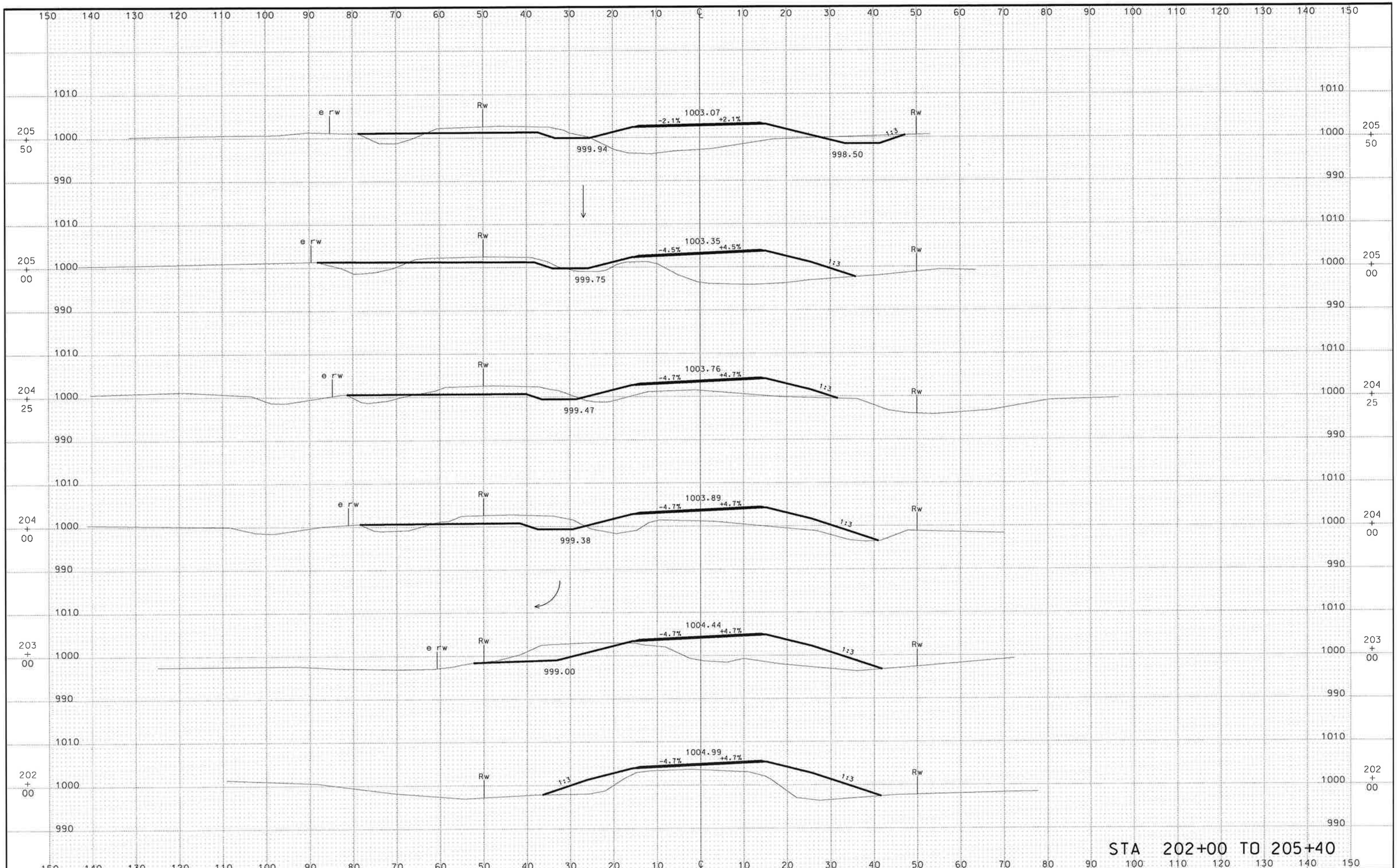

SAP 07-598-27 CR 164 SHEET 18 OF 21 SHEETS

RC004003.DGN 3/23/2010 11:25:10 AM

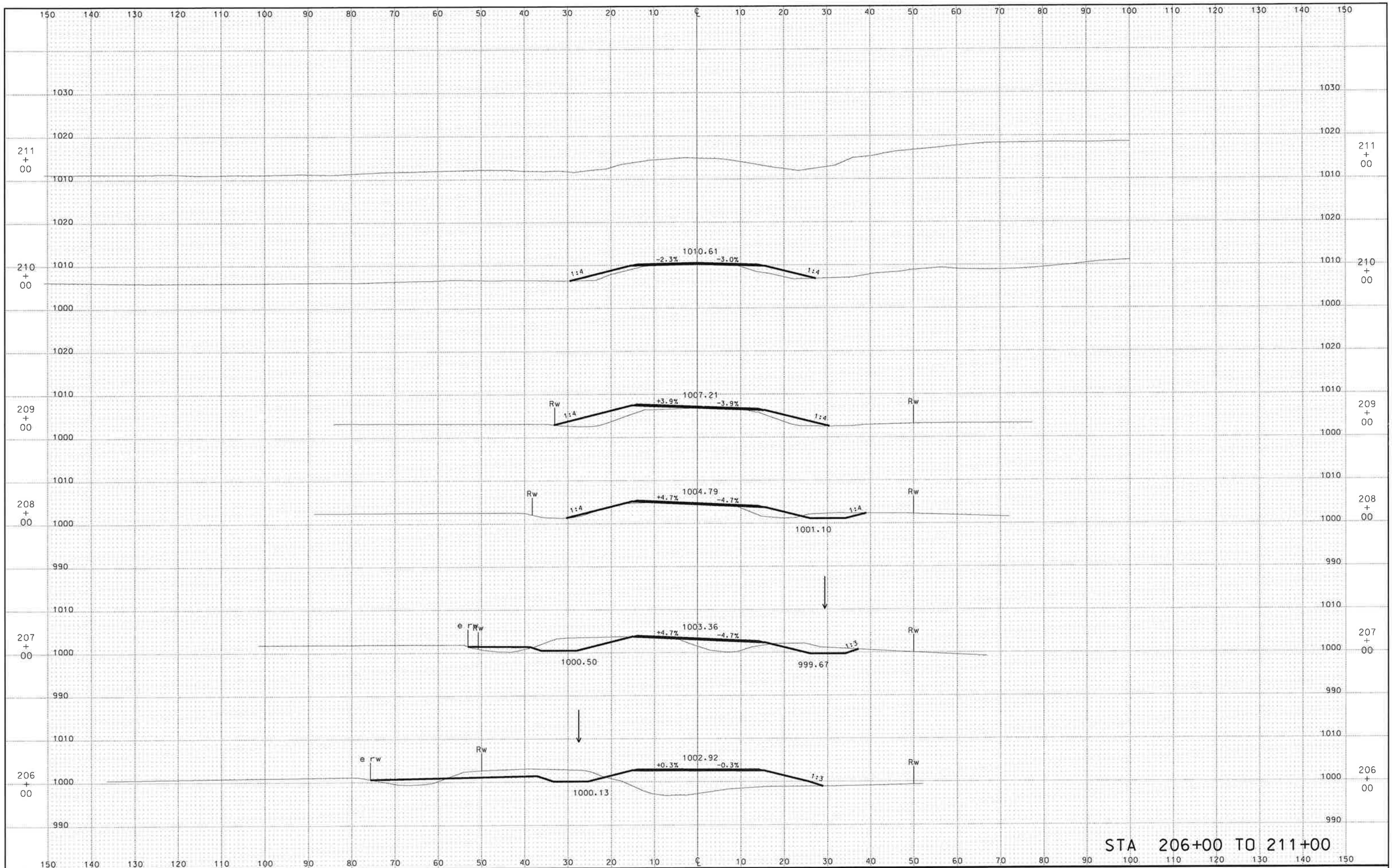

SAP 07-598-27 CR 164 SHEET 19 OF 21 SHEETS

rc005003.dgn 4/1/2010 11:02:17 AM

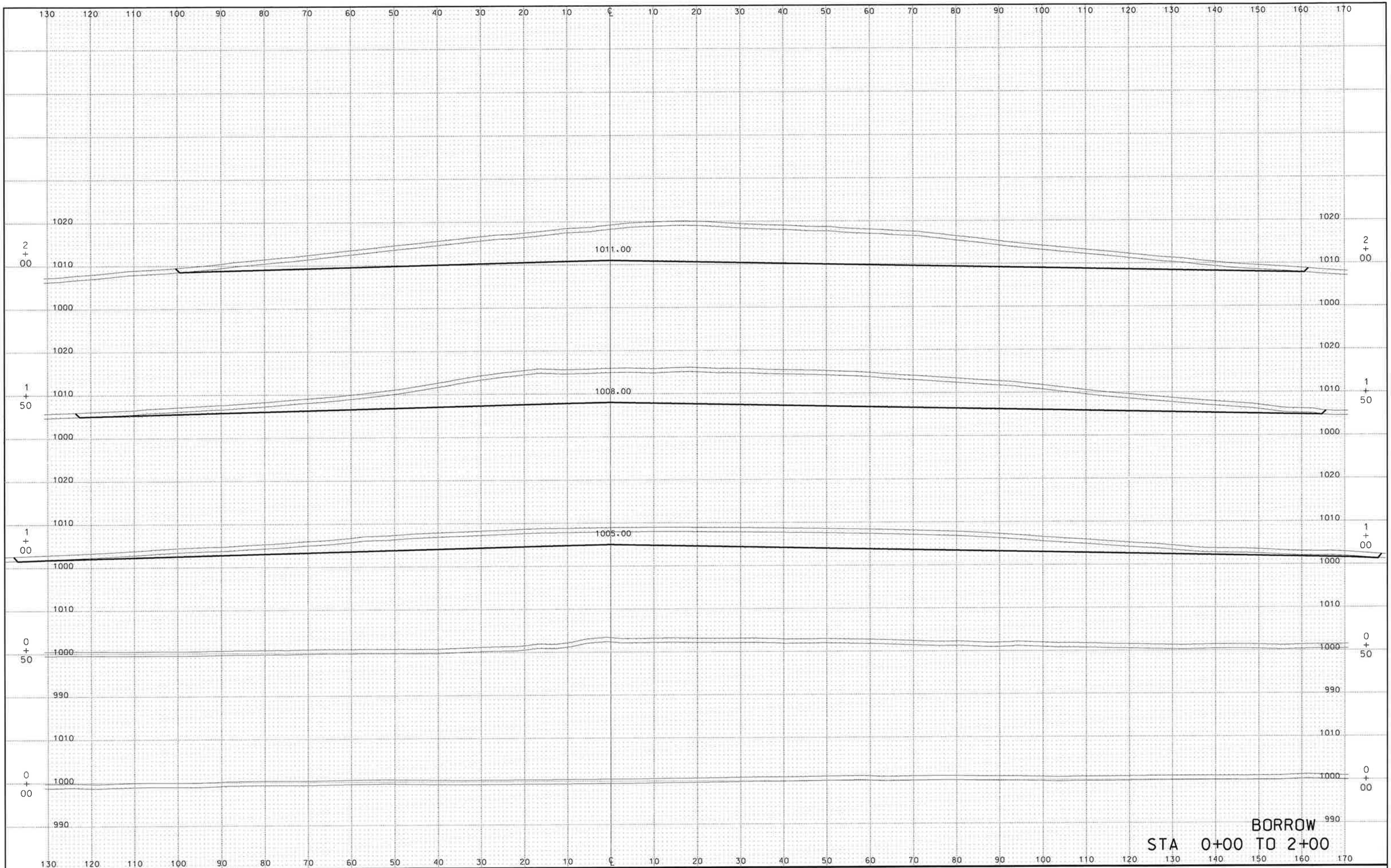

SAP 07-598-27 CR 164 SHEET 20 OF 21 SHEETS

RC001005.DGN 3/23/2010 2:29:37 PM

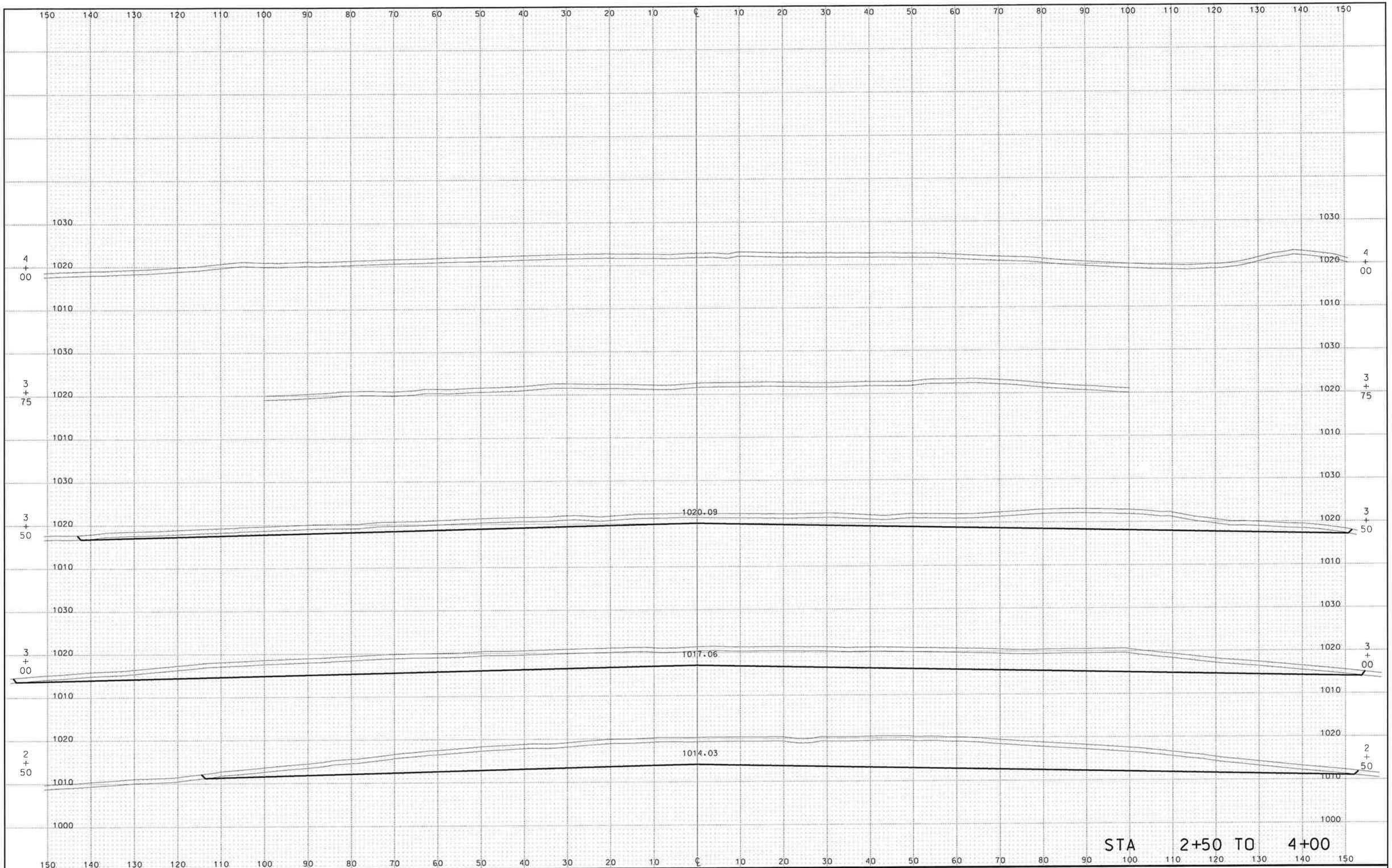

SAP 07-598-27 CR 164 SHEET 21 OF 21 SHEETS

RC002005.DGN 3/23/2010 2:27:02 PM

S:\AE\B\Bluep\107252\5-dsgn\51-cadd\Cr 164\bridge\cbrcr164_gp1.dgn CR 164 2/3/2010 9:03:18 AM

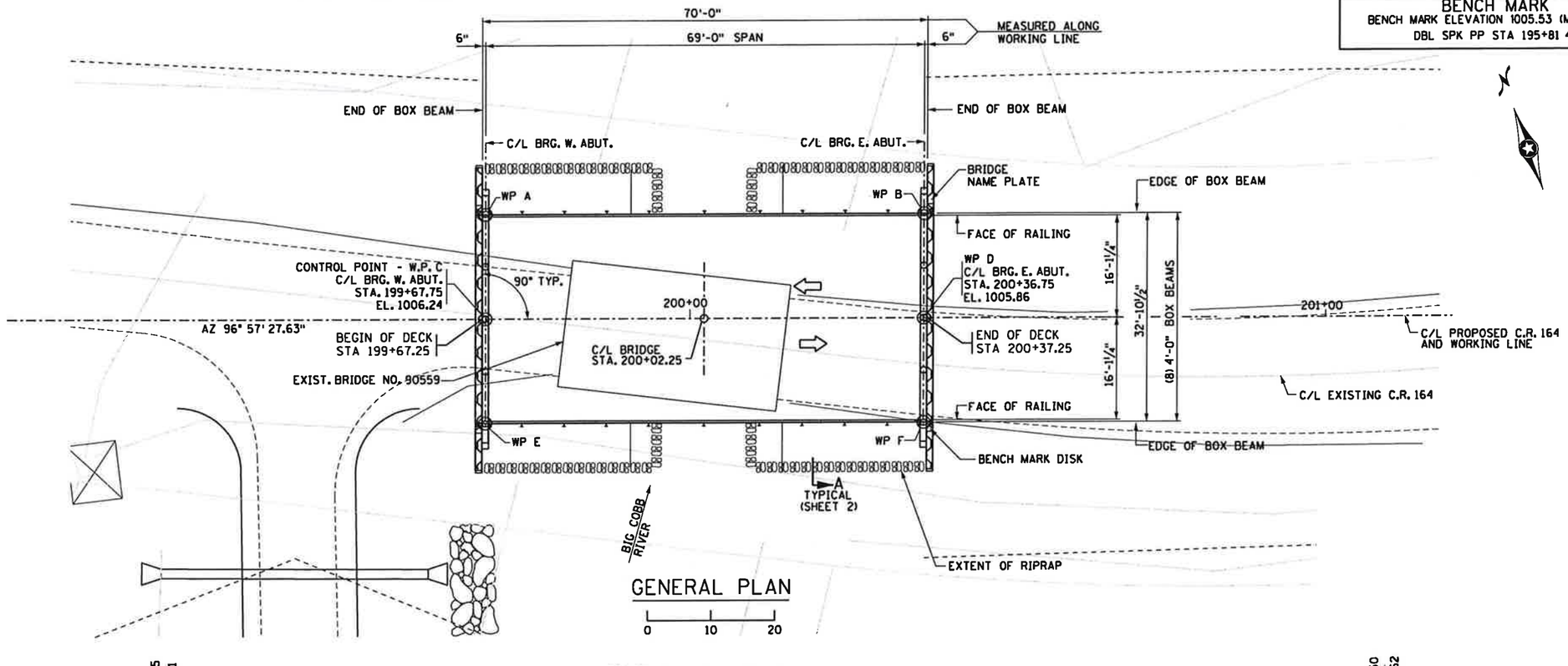

GENERAL PLAN

0 10 20

BENCH MARK

BENCH MARK ELEVATION 1005.53 (M.S.L. xxxx ADJ.)
DBL SPK PP STA 195+81 47' RT

DESIGN DATA

2007 AND CURRENT INTERIM AASHTO LRFD BRIDGE DESIGN SPECIFICATIONS
LOAD AND RESISTANCE FACTOR DESIGN METHOD

HL 93 LIVE LOAD
DEAD LOAD INCLUDES 20 psf ALLOWANCE FOR FUTURE WEARING COURSE MODIFICATIONS
MATERIAL DESIGN PROPERTIES:
REINFORCED CONCRETE:
f'c= 4 ksi n = 8
Fy= 60 ksi FOR REINFORCEMENT
PRESTRESSED CONCRETE:
f'c= 6 ksi n = 1
fpu= 270 ksi FOR LOW RELAXATION STRANDS

DECK AREA = 2301 SQ FT
DESIGN SPEED OVER = 40 MPH
BRIDGE OPERATING RATING RF = 1.32

LIST OF SHEETS

NO.	DESCRIPTION
B1	GENERAL PLAN AND ELEVATION
B2	BRIDGE QUANTITIES & TRANSVERSE SECTION
B3	BRIDGE LAYOUT
B4-B5	ABUTMENT DETAILS
B6	FRAMING PLAN
B7	BOX BEAM DETAILS
B8-B9	SUPERSTRUCTURE
B10-B11	RAILING DETAILS
B12-B13	B-DETAILS
B14	AS-BUILT BRIDGE DATA
B15	BRIDGE SURVEY
B16	BRIDGE SURVEY PLAN AND PROFILE

TRAFFIC VOLUMES

79 ADT (2010)

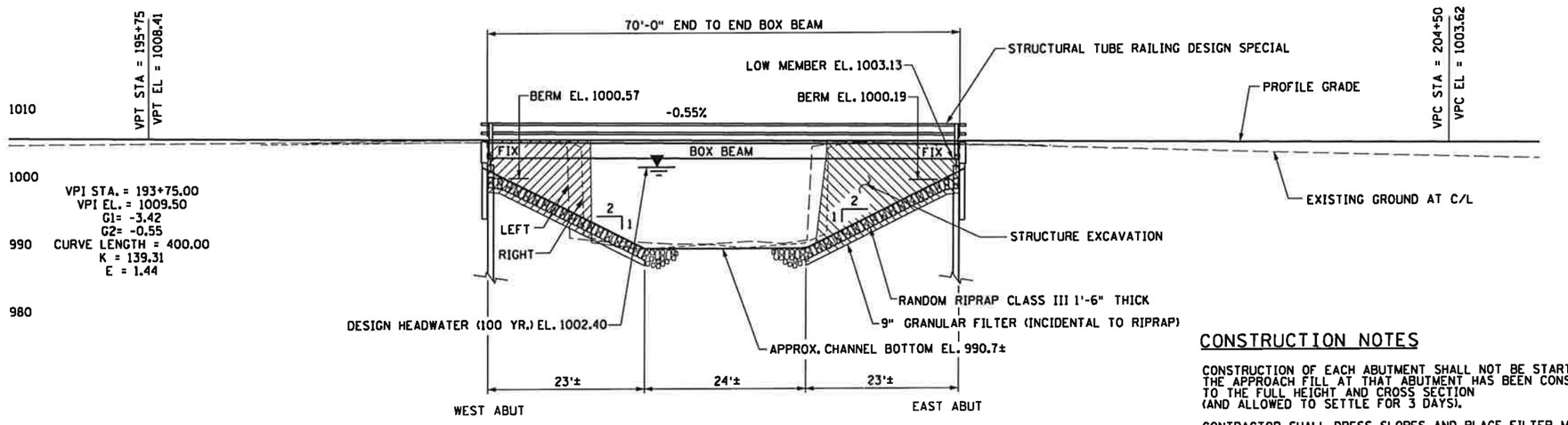

GENERAL ELEVATION

0 10 20

CONSTRUCTION NOTES

THE 2005 EDITION OF THE MINNESOTA DEPARTMENT OF TRANSPORTATION "STANDARD SPECIFICATIONS FOR CONSTRUCTION" SHALL GOVERN.

THE FIRST TWO DIGITS OF EACH BAR MARK INDICATE THE BAR NUMBER WHICH APPROXIMATES THE NOMINAL DIAMETER OF THE BAR IN MILLIMETERS (mm).

BARS MARKED WITH THE SUFFIX "E" SHALL BE EPOXY COATED IN ACCORDANCE WITH SPEC. 3301.

THE SUBSURFACE UTILITY INFORMATION IN THIS PLAN IS UTILITY QUALITY LEVEL D. THIS UTILITY QUALITY LEVEL WAS DETERMINED ACCORDING TO THE GUIDELINES OF CI/ASCE 38-02, ENTITLED "STANDARD GUIDELINES FOR THE COLLECTION AND DEPICTION OF EXISTING SUBSURFACE UTILITY DATA".

THE PILE LOADS SHOWN IN THE PLANS AND THE CORRESPONDING NOMINAL PILE BEARING RESISTANCE (Rn) WERE COMPUTED USING LRFD METHODOLOGY. PILE BEARING RESISTANCE DETERMINED IN THE FIELD SHALL INCORPORATE THE METHODS AND/OR FORMULAS DESCRIBED IN THE SPECIAL PROVISIONS.

CONSTRUCTION NOTES

CONSTRUCTION OF EACH ABUTMENT SHALL NOT BE STARTED UNTIL THE APPROACH FILL AT THAT ABUTMENT HAS BEEN CONSTRUCTED TO THE FULL HEIGHT AND CROSS SECTION (AND ALLOWED TO SETTLE FOR 3 DAYS).

CONTRACTOR SHALL DRESS SLOPES AND PLACE FILTER MATERIALS AND RIPRAP IN APPROXIMATE AREAS AS DIRECTED BY THE ENGINEER.

FOR INPLACE UTILITIES SEE RDWY DRAWINGS.

DRAWINGS ARE NOT TO BE SCALED.

APPROACH FILL AND ROUGH GRADING PROVIDED UNDER GRADING PORTION OF CONTRACT. RESTORATION OF SIDE SLOPES SHALL BE INCLUDED IN PRICE BID FOR STRUCTURE EXCAVATION. FORESLOPE SHALL BE PLACED AND COMPACTED IN SUBSTANTIAL CONFORMANCE WITH ITS FINAL SHAPE BEFORE ABUTMENT IS BACKFILLED.

EXISTING UTILITIES TO BE RELOCATED UNDER GRADING PORTION OF THE CONTRACT.

THE CONTRACTOR SHALL MAKE FIELD MEASUREMENTS AS NECESSARY PRIOR TO FABRICATION OF ALL COMPONENTS TO ASSURE PROPER FIT IN THE FINAL WORK.

HATCH AREA INCLUDE IN STRUCTURE EXCAVATION. SEE BRIDGE SURVEY PLAN AND PROFILE SHEET.

APPROVED Allen Rardey
BLUE EARTH COUNTY ENGINEER
DATE 08 Feb 10

SEH
3535 VADNAIS CENTER DRIVE
ST PAUL, MN 55110
PHONE (651) 490-2000
FAX (651) 490-2150

I HEREBY CERTIFY THAT THIS PLAN WAS PREPARED BY ME OR UNDER MY DIRECT SUPERVISION AND THAT I AM A DULY LICENSED PROFESSIONAL ENGINEER UNDER THE LAWS OF THE STATE OF MINNESOTA.

SIGNED _____ DATE 2-3-2010
NAME JEFFREY A. JOHNSON LIC NO 17280

C.R. 164
MINNESOTA
DEPARTMENT OF TRANSPORTATION

BRIDGE NO. 07593

PROPOSED BRIDGE LOCATED
CR 164 OVER THE BIG COBB RIVER
IN BLUE EARTH COUNTY
(1) 69'-0" PRESTRESSED BOX BEAM SPAN
32'-10 ½" WIDE. INCLUDES (2) 11'-0" LANES
IDENTIFICATION NO. 507

GENERAL PLAN AND ELEVATION

SEC 30 TWP 106 N R 25 W
MEDO TOWNSHIP BLUE EARTH CO

APPROVED Ronald L. Dangman
STATE BRIDGE ENGINEER
DATE 4/20/10

DES. NCK	DR. MAW	07593
CHK. JAJ	CHK. JAJ	

JOB NO. DESIGN REVIEW UNIT: STATE AID PROJ NO 07-598-27 SHEET NO B1 OF B16 SHEETS

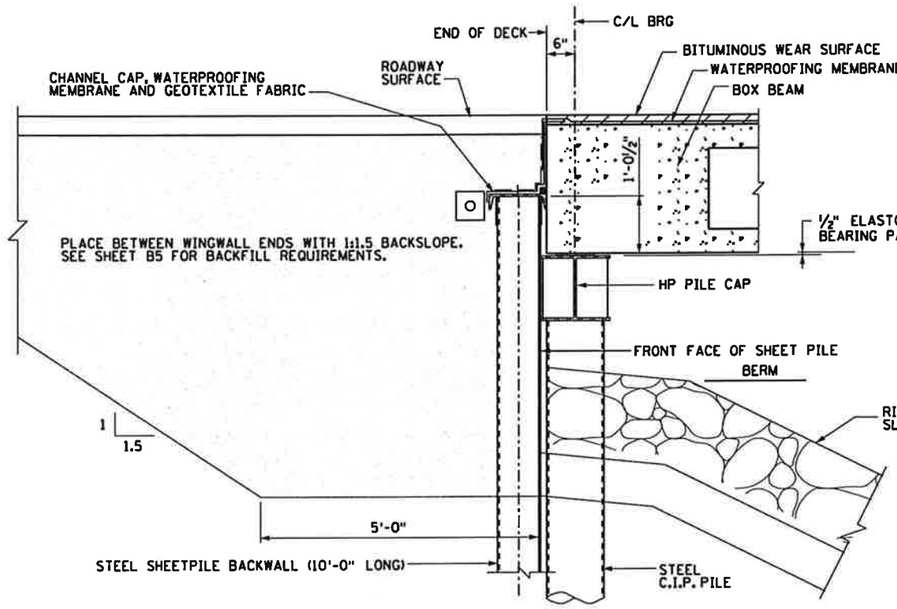

SECTION A-A

STEEL ABUTMENT

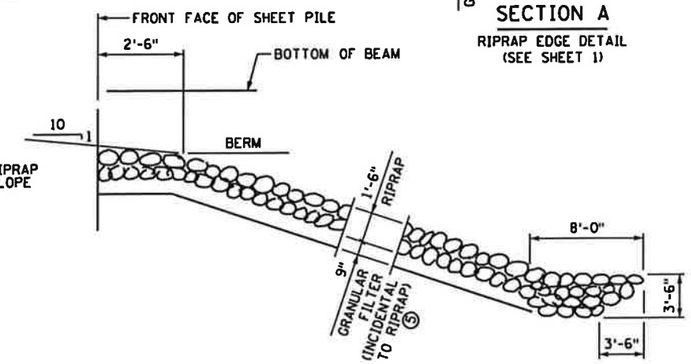

RIPRAP DETAIL

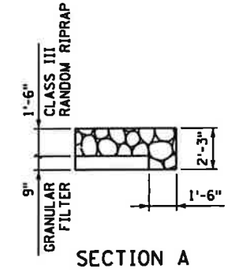

SECTION A

RIPRAP EDGE DETAIL (SEE SHEET 1)

SCHEDULE OF QUANTITIES FOR ENTIRE BRIDGE

	ITEM NO	ITEM	UNIT	QUANTITY
	2021.501	MOBILIZATION	LUMP SUM	1
	2357.502	BITUMINOUS MATERIAL FOR TACK COAT	GALLON	37
	2360.501	TYPE SP 19.0 WEARING COURSE MIXTURE (2,B)	TON	41
	2401.601	STRUCTURE EXCAVATION	LUMP SUM	1
	2401.601	SLOPE PREPARATION	LUMP SUM	1
①	2402.521	STRUCTURAL STEEL (3309)	POUND	8960 (P)
②	2402.584	STRUCTURAL TUBE RAILING DESIGN SPECIAL	LIN. FT.	136 (P)
	2402.590	ELASTOMERIC BEARING PAD TYPE 1	EACH	18 (P)
	2405.603	PRESTRESSED CONCRETE BOX BEAMS 27x48	LIN. FT.	560 (P)
	2452.507	C-I-P CONCRETE PILING DELIVERED 12"	LIN. FT.	640
	2452.508	C-I-P CONCRETE PILING DRIVEN 12"	LIN. FT.	640
	2452.519	C-I-P CONC TEST PILE 90 FT LONG 12"	EACH	2
	2452.602	PILE TIP PROTECTION 12"	EACH	10
③	2452.618	STEEL SHEET PILING (PERMANENT)	SQ. FT.	972 (P)
⑤	2481.501	JOINT WATERPROOFING	LIN. FT.	518
	2502.601	DRAINAGE SYSTEM TYPE (B911)	LUMP SUM	1
④	2511.501	RANDOM RIPRAP CLASS III	CU. YD.	216

① INCLUDES HP PILE CAP AND SHEET PILE CAP.

② STRUCTURAL TUBE RAILING DESIGN IS A WISCONSIN DOT STANDARD TUBULAR METAL RAILING TYPE F. THIS RAILING MEETS NCHRP REPORT 350 EVALUATION CRITERIA FOR TEST LEVEL 2 (TL-2).

③ SEE SHEET B4.

④ 9" GRANULAR FILTER IS INCLUDED IN PRICE BID FOR "RANDOM RIPRAP, CLASS III". APPROXIMATE QUANTITY = 69 CU. YDS.

⑤ INCLUDES BOX BEAM JOINTS. WATERPROOFING OF THE SHEETPILE AT THE ENDS OF THE BOX BEAM IS INCIDENTAL TO OTHER ITEMS.

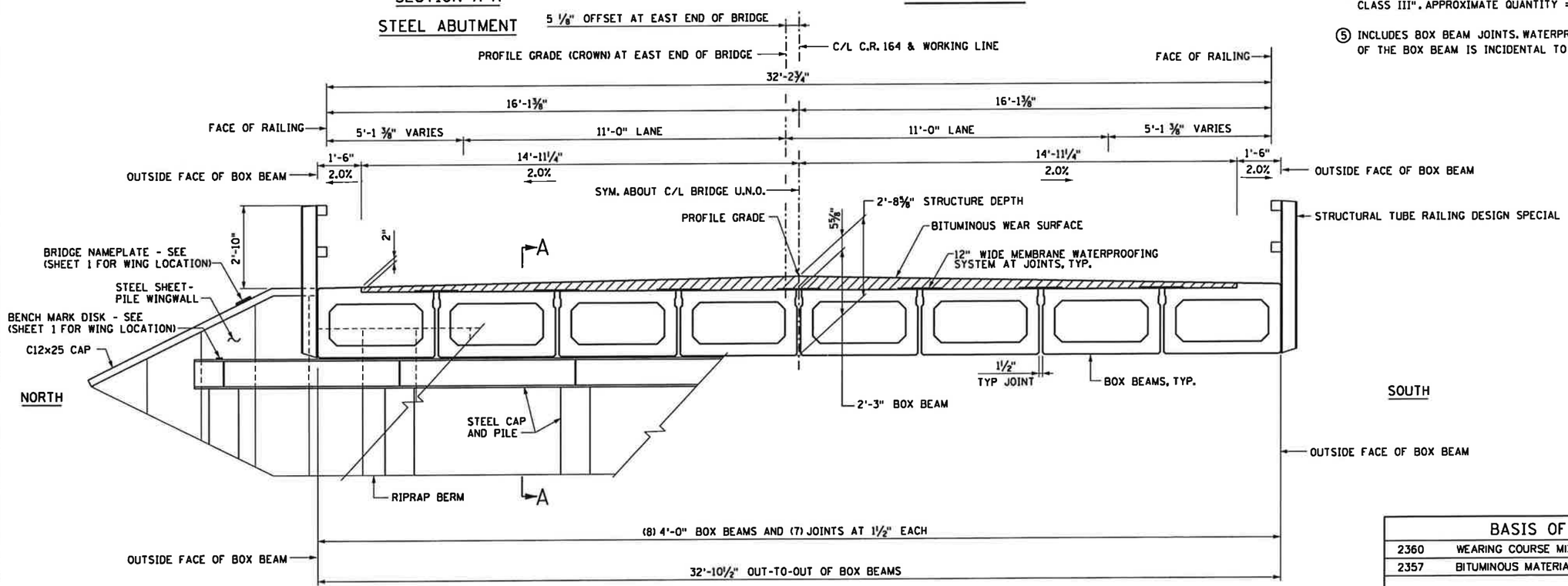

TYPICAL TRANSVERSE SECTION

BASIS OF ESTIMATED QUANTITIES

2360	WEARING COURSE MIXTURE	110#/SQ YD/INCH
2357	BITUMINOUS MATERIAL FOR TACKCOAT	0.16 GAL./S.Y.

SEH
3535 VADNAIS CENTER DRIVE
ST PAUL, MN 55110
PHONE (651) 490-2000
FAX (651) 490-2150

I hereby certify that this plan, specification, or report was prepared by me or under my direct supervision and that I am a duly Licensed Professional Engineer under the laws of the state of Minnesota

Signature: _____ Date: 2-3-2010

Printed Name: JEFFREY A JOHNSON Reg. No. 17280

TITLE: BRIDGE QUANTITIES & TRANSVERSE SECTION

SAP NO 07-598-27

DES: MAW	DR: MAW	APPROVED:
CHK: JAJ	CHK: JAJ	

SHEET NO B2 OF B16 SHEETS

BRIDGE NO 07593

S:\AE\B\Bluep\107252\5-dsgn\51-cadd\Cr 164\bridge\cbrcr164_bq1.dgn
CR 164
2/3/2010
9:03:20 AM

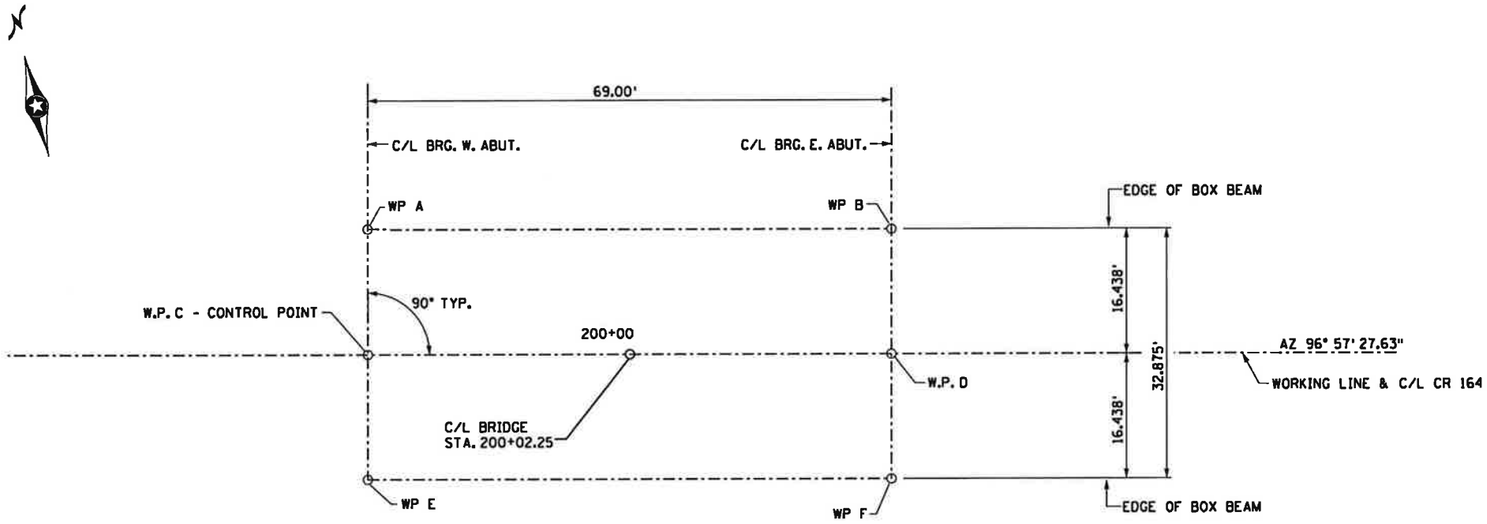

WORKING POINT LAYOUT

DIMENSIONS ARE SHOWN IN FEET

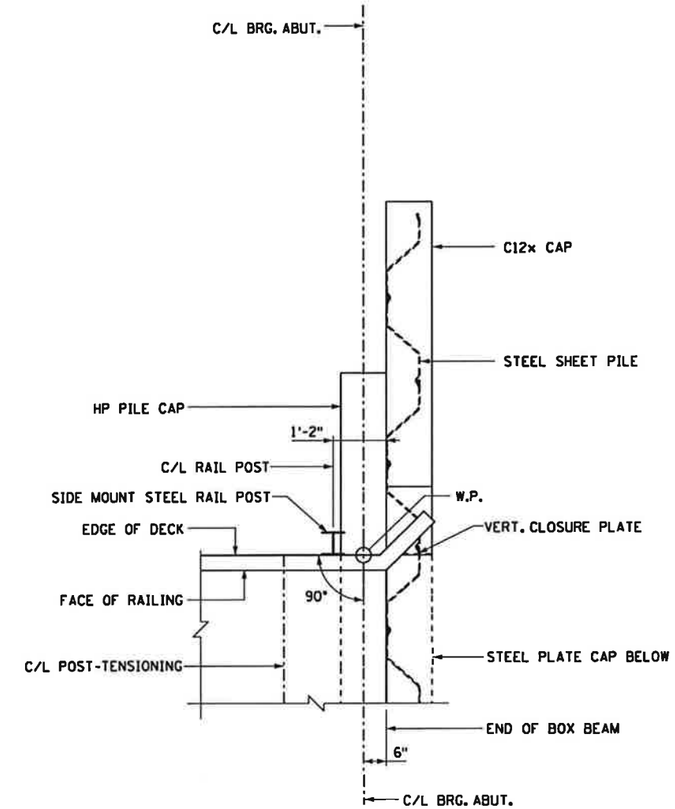

TYPICAL CORNER DETAIL

POINT NUMBER	DIMENSIONS BETWEEN WORKING POINTS										ELEVATIONS			
	POINT	STATION	X	Y	A	B	C	D	E	F	TOP OF SLAB	TOP OF SLAB TO BR SEAT	BRIDGE SEAT	POINT
	A	199+67.75	600326.694	139874.621		69.00	16.44	70.93	32.88	76.43	1005.91	2.43	1003.48	WP A
	B	200+36.75	600395.185	139866.263			70.93	16.44	76.43	32.87	1005.53	2.43	1003.10	WP B
	C	199+67.75	600324.702	139858.305				69.00	16.44	70.93	1006.24	2.76	1003.48	WP C
	D	200+36.75	600393.194	139849.947					70.93	16.44	1005.85	2.76	1003.10	WP D
	E	199+67.75	600322.711	139841.989						69.00	1005.91	2.43	1003.48	WP E
	F	200+36.75	600391.203	139833.630							1005.53	2.43	1003.10	WP F

ALL DISTANCES ARE ALONG STRAIGHT LINES BETWEEN WORKING POINTS AND ARE GIVEN IN DECIMALS OF A FOOT.

COORDINATES BASED ON BLUE EARTH COUNTY TRANSVERSE MERCATOR.

TOP OF ROADWAY TO BRIDGE SEAT		
	ALONG EDGE	ALONG C/L
SLAB THICKNESS	1.625"	5.625"
STOOL HEIGHT	0"	0"
BEAM HEIGHT	27"	27"
BEARING HEIGHT	½"	½"
TOTAL (IN)	29.125"	33.125"
TOTAL (FT)	2.43'	2.76'

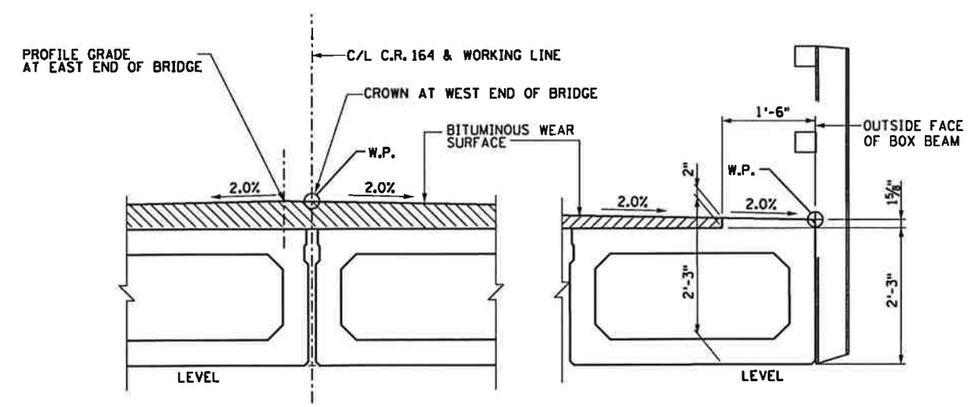

WORKING POINT SCHEMATIC

SAP NO 07-598-27

SEH
3535 VADNAIS CENTER DRIVE
ST PAUL, MN 55110
PHONE (651) 490-2000
FAX (651) 490-2150

I hereby certify that this plan, specification, or report was prepared by me or under my direct supervision and that I am a duly Licensed Professional Engineer under the laws of the state of Minnesota

Signature: _____ Date: 2-3-2010

Printed Name: JEFFREY A JOHNSON Reg. No. 17280

TITLE: BRIDGE LAYOUT

DES: MAW	DR: MAW	APPROVED:
CHK: JAJ	CHK: JAJ	

SHEET NO B3 OF B16 SHEETS

BRIDGE NO 07593

S:\AE\B\B1uep\107252\5-dsgn\51-cadd\Cr 164\bridge\cbrcr164.wp1.dgn 2/3/2010 9:03:22 AM CR 164

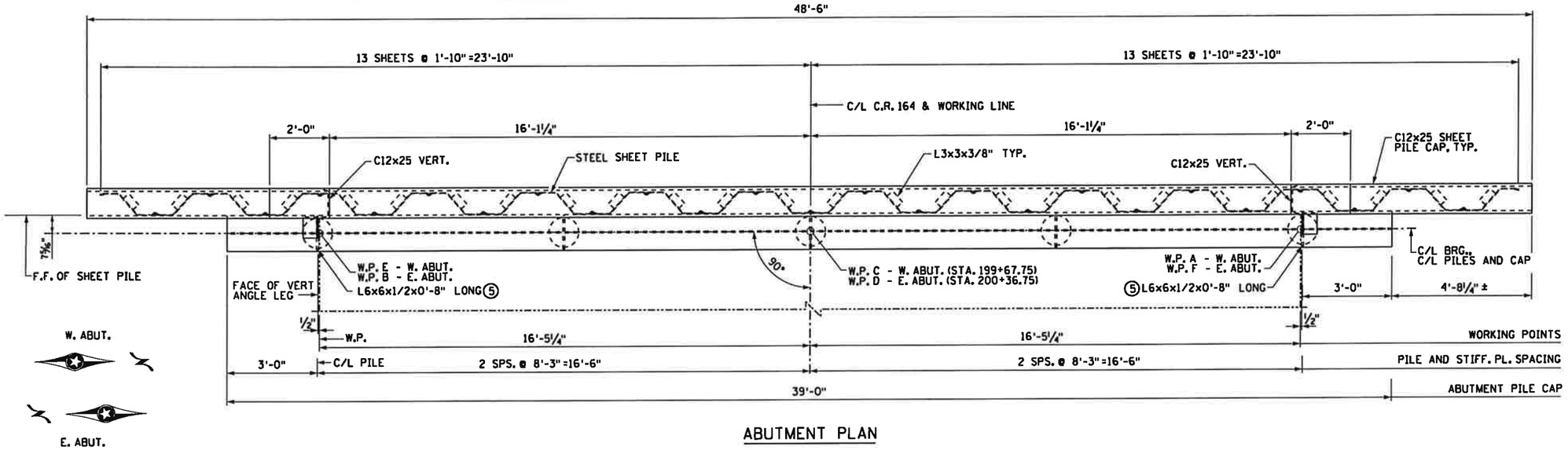

ABUTMENT PLAN

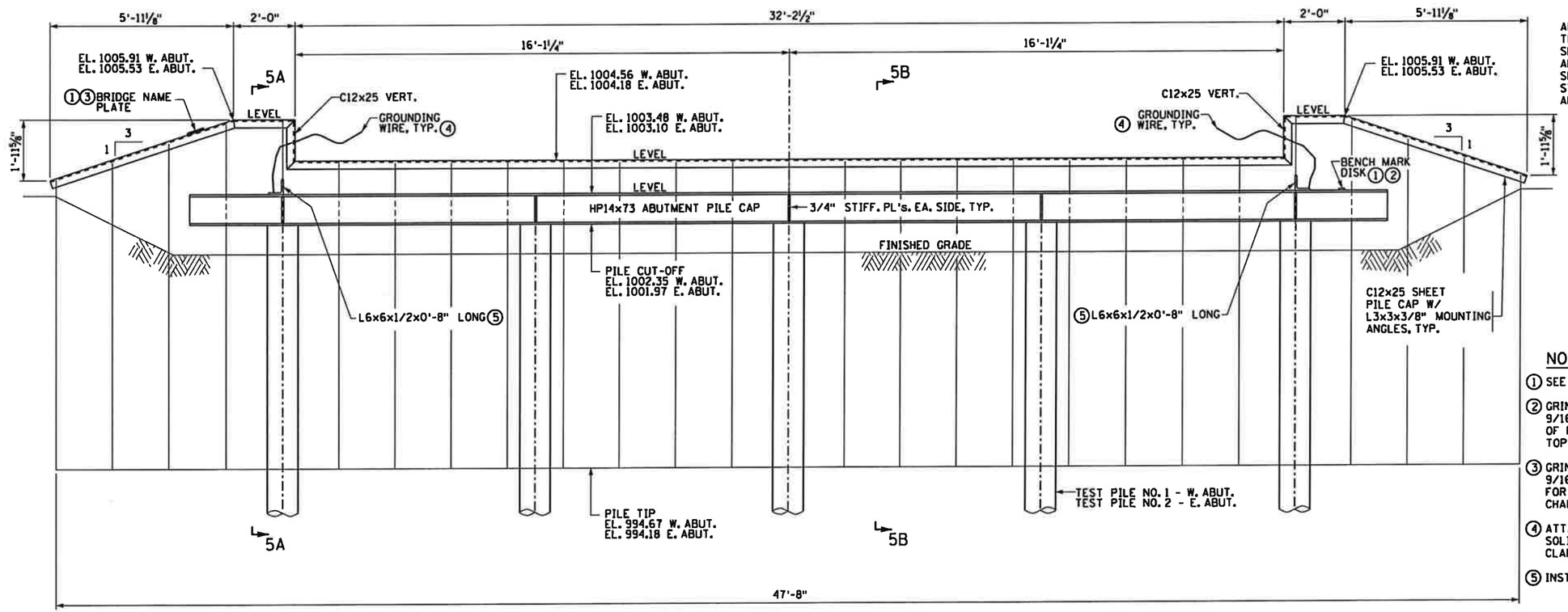

ABUTMENT ELEVATION

ABUTMENT COMPUTED PILE LOAD - TONS/PILE	
FACTORED DEAD LOAD + EARTH PRESSURE	38.4
FACTORED LIVE LOAD	47.0
✱FACTORED DESIGN LOAD	85.4

✱BASED ON STRENGTH I LOAD COMBINATION.

ABUTMENT REQUIRED NOMINAL PILE BEARING RESISTANCE R_n - Tons / Pile		
FIELD CONTROL METHOD	Φ_{dyn}	✱R_n
Mn/DOT Nominal Resistance Formula	0.40	213.5
PDA	0.65	131.4

✱R_n = (Factored Design Load) / Φ_{dyn}

PILE NOTES

1 12" C-I-P TEST PILE 90 FT. LONG
4 12" C-I-P PILES EST LENGTH 80 FT.
5 12" C-I-P PILES REQ'D FOR EACH ABUTMENT.

PILE SPACING SHOWN IS AT TOP OF PILE.

FOR PILE SPLICE DETAILS SEE DETAIL B201.

ALL ABUTMENT STEEL SHEET PILES SHALL MEET OR EXCEED THE SECTION PROPERTIES IN THE STEEL SHEET MINIMUM SECTION PROPERTIES TABLE.
ALL ABUTMENT STEEL SHEET PILES SHALL BE MnDOT SPEC. 3373.
STEEL SHEET PILING SHALL BE IN ACCORDANCE WITH 2452 AND HAVE THE FOLLOWING SECTION PROPERTIES:
MATERIAL - HOT ROLLED PER ASTM A328 OR COLD FORMED PER ASTM A709 GR 50W, UNCOATED OR HOT DIP GALVANIZED

STEEL SHEET PILE MINIMUM SECTION PROPERTIES		
MOMENT OF INERTIA	84.4	$IN.^4$/FT. MIN.
SECTION MODULUS	18.1	$IN.^3$/FT. MIN.
DEPTH	9	IN.
WALL THICKNESS	0.375	IN. MIN.

NOTES:

① SEE SHEET B1 FOR LOCATION.

② GRIND OFF EMBEDMENT STEM ON BACK OF DISK AND DRILL 9/16" DIA. HOLE CENTERED IN DISK AND IN TOP FLANGE OF PILE CAP FOR 1/2" DIA. GALV. BOLT. FASTEN DISK TO TOP FLANGE OF CAP. UPSET THREADS OF BOLTS.

③ GRIND OFF EMBEDMENT STEMS ON BACK OF PLATE AND DRILL 9/16" DIA. HOLES IN PLATE AND IN WEB OF CHANNEL CAP FOR 1/2" DIA. GALV. BOLT. FASTEN PLATE TO WEB OF CHANNEL CAP. UPSET THREADS OF BOLTS.

④ ATTACH RAILING ANCHOR PLATES TO PILE CAP WITH A SOLID NO. 6 GAUGE COPPER WIRE WITH AN APPROVED TYPE CLAMP OR BRAZING.

⑤ INSTALL AFTER BEAMS ARE POST-TENSIONED.

F.F.=FRONT FACE
B.F.=BACK FACE
E.F.=EACH FACE

SEH
3535 VADNAIS CENTER DRIVE
ST PAUL, MN 55110
PHONE (651) 490-2000
FAX (651) 490-2150

I hereby certify that this plan, specification, or report was prepared by me or under my direct supervision and that I am a duly Licensed Professional Engineer under the laws of the state of Minnesota
Signature: Date: 2-3-2010
Printed Name: JEFFREY A. JOHNSON Reg. No. 17280

TITLE: ABUTMENT DETAILS

SAP NO 07-598-27

DES: NCK	DR: MAW	APPROVED:
CHK: JAJ	CHK: NCK	

SHEET NO B4 OF B16 SHEETS

BRIDGE NO 07593

S:\AE\B\B1\wsp\107252\5-dgn\51-cadd\Cr 164\bridge\cbrcr164_wa1.dgn
CR 164
4/22/2010
10:51:16 AM

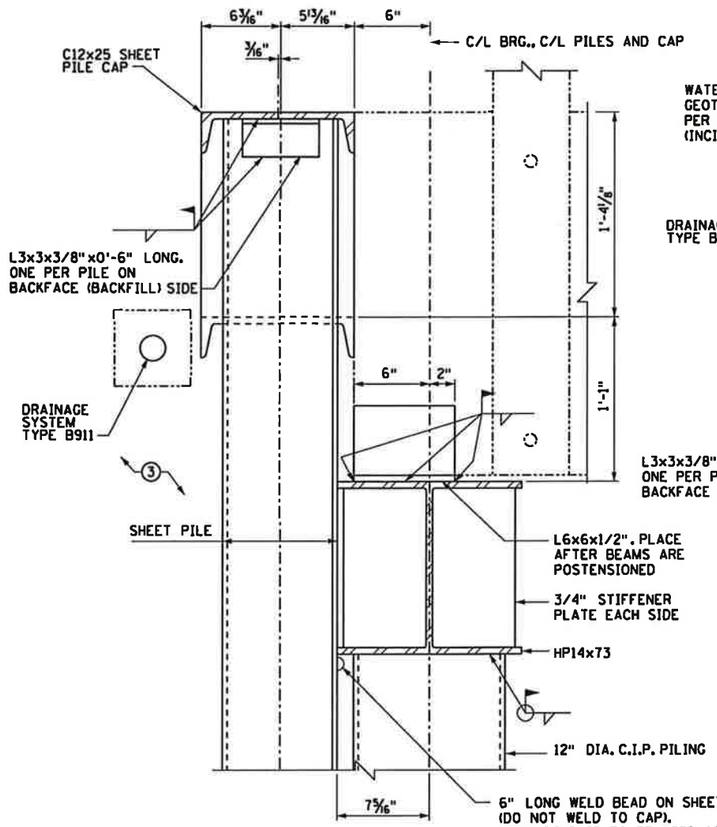

6" LONG WELD BEAD ON SHEET PILE. (DO NOT WELD TO CAP). WELD BEAD IS TO BE USED AS SHEETPILE SETTLEMENT INDICATOR. PLACE BEAD CLOSE TO BOTTOM OF HP14 CAP. LOCATE BEADS NEAR EACH END OF CAP AND AT CENTER OF ABUTMENT.

SECTION 5A-5A

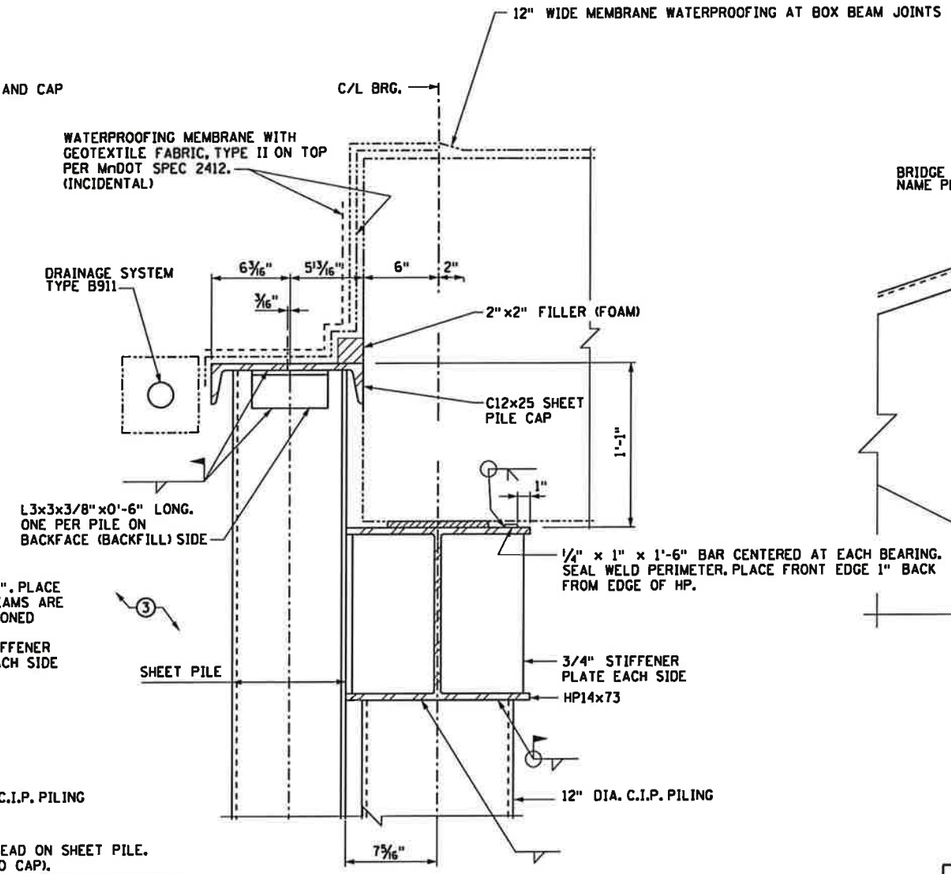

SECTION 5B-5B

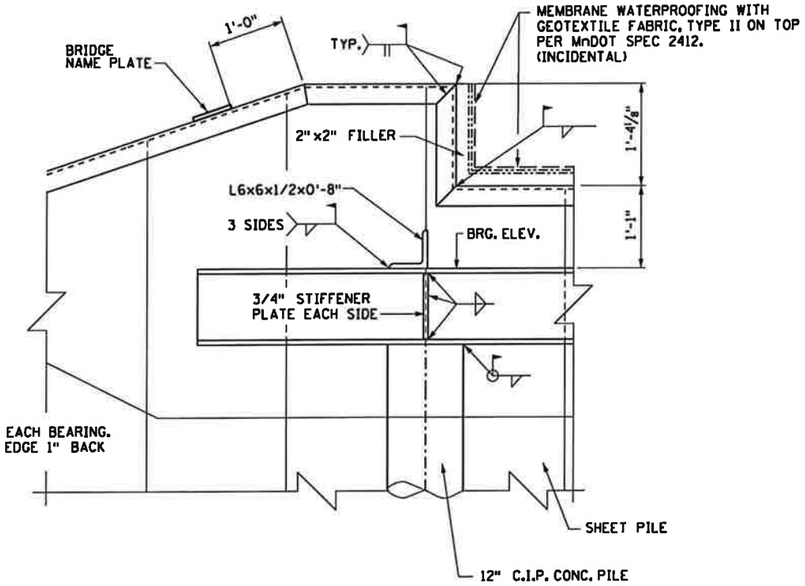

FIELD WELDING DETAIL C

SUMMARY OF QUANTITIES FOR BOTH ABUTMENTS

	ITEM	UNIT	W. ABUT.	E. ABUT.	TOTAL
1 3	STRUCTURE EXCAVATION	LUMP SUM	1	1	1
	STRUCTURAL STEEL (3309)	POUND	4480	4480	8960
2	C-I-P CONCRETE PILING DELIVERED 12"	LIN. FT.	320	320	640
2	C-I-P CONCRETE PILING DRIVEN 12"	LIN. FT.	320	320	640
	C-I-P CONC. TEST PILE 90 FT. LONG 12"	EACH	1	1	2
	PILE TIP PROTECTION 12"	EACH	5	5	10
	STEEL SHEET PILING (PERMANENT)	SQ. FT.	486	486	972

1 SEE SPECIAL PROVISIONS.

2 DOES NOT INCLUDE TEST PILES.

3 BACKFILL BEHIND ABUTMENTS SHALL BE SELECT GRANULAR BORROW PER SPEC. 3149.2B2. SEE SHEET B2 FOR PLACEMENT LIMITS. APPROX. QUANTITY (C.V.) = 250 CU. YD. INCLUDED IN PRICE BID FOR STRUCTURE EXCAVATION. BACKFILL DENSITY SHALL BE ATTAINED IN ACCORDANCE THE GEOTECHNICAL REPORT. NO BACKFILL SHALL BE PLACED UNTIL PRESTRESSED CONCRETE BEAMS HAVE BEEN PLACED INTO THEIR FINAL POSITIONS ON THE ABUTMENTS. SEE SPECIAL PROVISIONS.

SEH
3535 VADNAIS CENTER DRIVE
ST PAUL, MN 55110
PHONE (651) 490-2000
FAX (651) 490-2150

I hereby certify that this plan, specification, or report was prepared by me or under my direct supervision and that I am a duly licensed Professional Engineer under the laws of the state of Minnesota

Signature: _____ Date: 2-3-2010

Printed Name: JEFFREY A. JOHNSON Reg. No. 17280

TITLE: ABUTMENT DETAILS

SAP NO 07-598-27

DES: NCK	DR: MAW	APPROVED:
CHK: JAJ	CHK: NCK	

SHEET NO B5 OF B16 SHEETS

BRIDGE NO 07593

S:\AE\B\Iuap\107252\5-dgn\51-cadd\Cr 164\bridge\cbrcr164_wal.dgn
CR 164
4/22/2010
10:51:40 AM

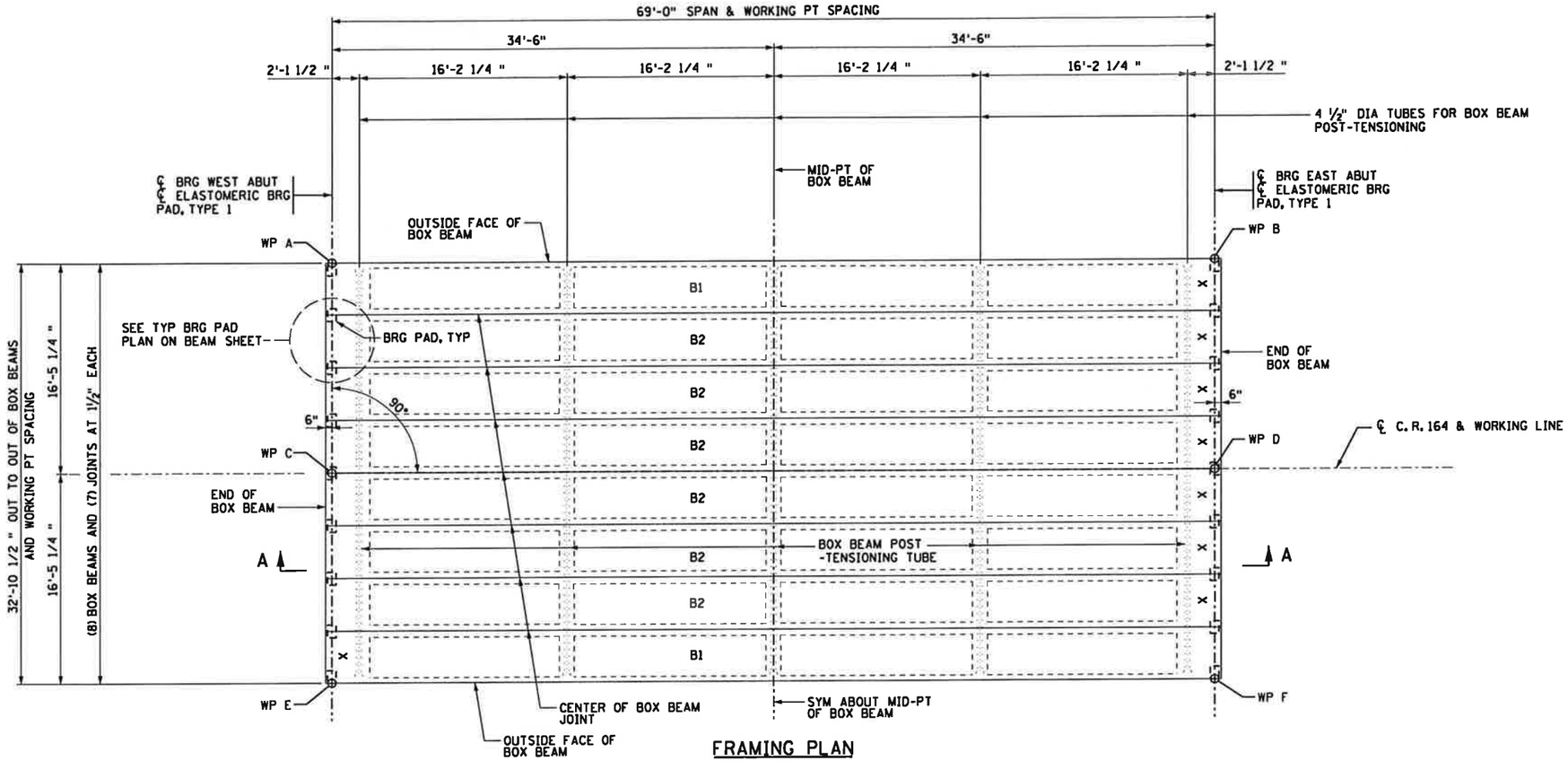

FRAMING PLAN

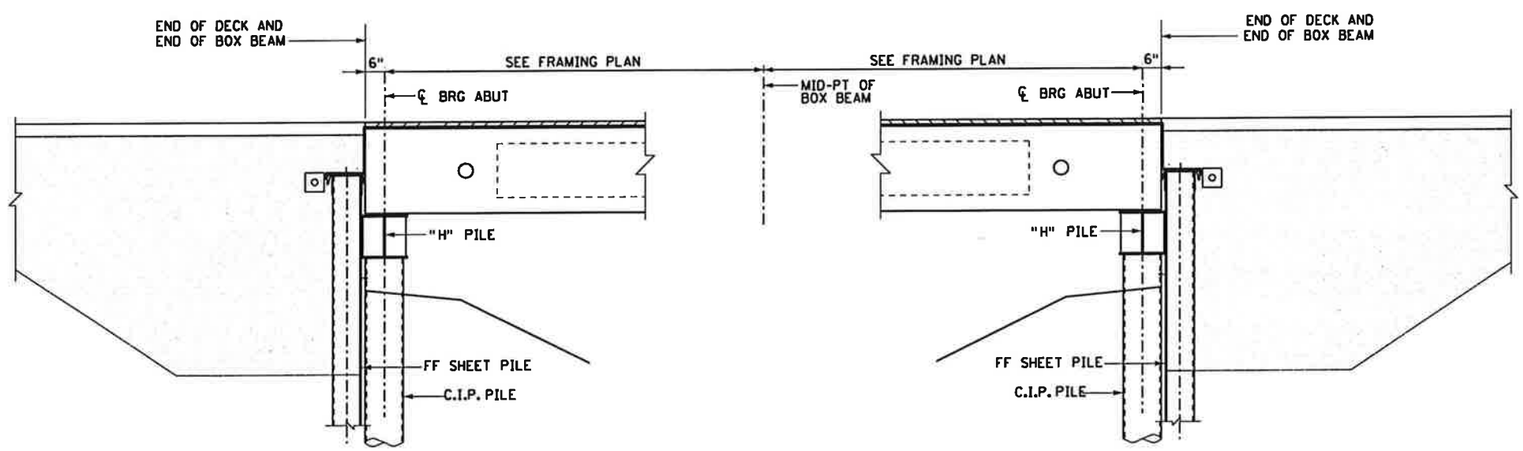

WEST ABUTMENT
(FIXED)

EAST ABUTMENT
(FIXED)

LONGITUDINAL SECTION A-A

NOTES:

SEE SHEET B7 FOR BOX BEAM DETAILS. BEAMS SHALL HAVE ONE END MARKED "X" AS SHOWN. SEE "BEAM MARKING NOTE" BELOW.

"X" DENOTES END OF BEAM.

ALL DIMENSIONS SHOWN, UNLESS NOTED OTHERWISE ARE MEASURED ON A HORIZONTAL PLANE.

SEH
3535 VADNAIS CENTER DRIVE
ST PAUL, MN 55110
PHONE (651) 490-2000
FAX (651) 490-2150

I hereby certify that this plan, specification, or report was prepared by me or under my direct supervision and that I am a duly Licensed Professional Engineer under the laws of the state of Minnesota

Signature: _____ Date: 2-3-2010
Printed Name: JEFFREY A JOHNSON Reg. No. 17280

TITLE: FRAMING PLAN

SAP NO 07-598-27

DES: NCK	DR: DLF	APPROVED:	BRIDGE NO 07593
CHK: JAJ	CHK: NCK		
SHEET NO B6 OF B16 SHEETS			

S:\AE\B\B1usp\107252\5-dsgn\51-cadd\Cr 164\bridge\cbrcr164.fpl.dgn 2/3/2010 9:03:27 AM CR 164

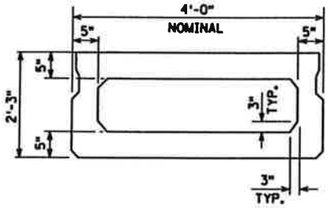

TYP CROSS SECTION
ALL BEAMS

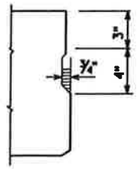

SHEAR KEY

OMIT SHEAR KEY ON EXTERIOR FACE OF EXTERIOR GIRDERS.

LEGEND

⚠ FOR BITUMINOUS WEARING SURFACE, PROVIDE MEMBRANE IN ACCORDANCE WITH SPECIAL PROVISIONS.

◪ SPACING SHOWN FOR TOP STIRRUPS ARE MAXIMUMS. THE CONTRACTOR MAY ELECT (AT NO ADJUSTMENT IN BID PRICE) TO REDUCE THE SPACING OF THESE BARS OR TO ADD ADDITIONAL REINFORCEMENT TO FACILITATE TYING OF THE REINFORCEMENT.

CALCULATED PRESTRESS LOSSES	
ELASTIC SHORTENING LOSS	10.75 KSI
LONG TERM LOSSES	23.13 KSI

MINIMUM CONCRETE STRENGTH - P.S.I.	
① f'ci	② f'c
5,500	6,000

① MINIMUM CONCRETE STRENGTH AT TIME OF PRESTRESS TRANSFER.

② MINIMUM CONCRETE STRENGTH WHEN BEAM CAN BE TRANSPORTED AND INSTALLED.

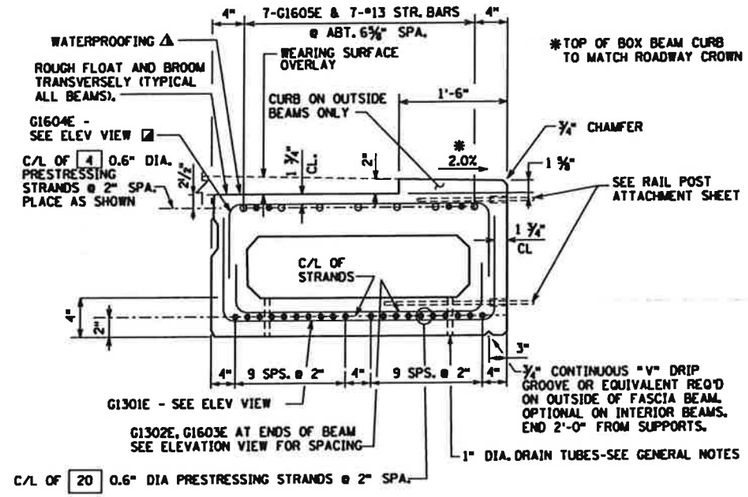

*TOP OF BOX BEAM CURB TO MATCH ROADWAY CROWN

CROSS SECTION

GENERAL NOTES

FOUR WAY SLING MUST BE USED TO ENGAGE ALL 4 LIFTING DEVICES ON BOTH ENDS OF UNITS.

EACH BEAM SHALL BE MARKED, SHOWING BRIDGE NUMBER, CASTING DATE, AND INDIVIDUAL IDENTIFICATION LETTERS AND NUMBERS. MARKINGS SHALL BE MADE ON THE FACE OF THE BEAM, NEAR THE END, SO LOCATED THAT THEY WILL BE MARKED ON THE INSIDE FACE. ALL MARKINGS SHALL BE STENCILLED AND BE CLEARLY LEGIBLE. FOR LOCATION OF BEAMS, SEE FRAMING PLAN.

ALL MATERIAL AND WORK SHOWN OR NOTED ON THIS SHEET SHALL BE INCLUDED IN THE PRICE BID FOR PRESTRESSED CONCRETE BOX BEAMS. SEE MN/DOT SPEC 2405. CONCRETE MIX SHALL BE 3W36 (AIR ENTRAINED, 8% +/-1.5%).

APPROXIMATE WEIGHT OF BEAM IS 25.2 TONS.

STRANDS SHALL BE CUT FLUSH WITH END OF UNIT.

VOIDS SHALL BE VENTED AND DRAINED BY CASTING (2) 1" DIA. TUBES AT EACH END AND CENTER OF VOID SEGMENT. LOCATE TUBES AT BOTTOM EDGES OF THE CORNER FILLETS.

BEAM SEATS TO BE LEVEL. SEE ABUTMENT SHEETS.

POST-TENSIONING OF THE TRANSVERSE TENDONS SHALL NOT BEGIN UNTIL THE GROUT BETWEEN THE PRECAST BEAMS HAS BEEN ALLOWED TO CURE FOR 48 HOURS.

BAR STEEL REINFORCEMENT SHALL BE GRADE 60, (FY=60 K.S.I.) EPOXY COATED.

THE FIRST TWO DIGITS OF EACH BAR MARK INDICATE THE BAR NUMBER WHICH APPROXIMATES THE NOMINAL DIAMETER OF THE BAR IN MILLIMETERS (mm).

BARS MARKED WITH THE SUFFIX "E" SHALL BE EPOXY COATED IN ACCORDANCE WITH SPEC. 3301.

PRESTRESSING STRANDS SHALL BE 7-WIRE LOW RELAXATION STRAND, CONFORMING TO ASTM A416, GRADE 270.

THE CEMENT AND FINE AGGREGATE FOR THE GROUT BETWEEN THE POST-TENSIONED BEAMS SHALL BE PROPORTIONED BY WEIGHT AS INDICATED IN THE SPECIAL PROVISIONS.

ABUTMENT BACKWALLS AND CONCRETE OVERLAY SHALL NOT BE POURED UNTIL AFTER THE POST-TENSIONING HAS BEEN COMPLETED.

SEAL WASHER SHALL BE SPONGE NEOPRENE GASKET 2½" MIN. THICK. STRESS POCKETS SHALL BE FILLED WITH CHLORIDE FREE NON-SHRINK GROUT AFTER POST-TENSIONING (REFER TO SPECIAL PROVISION FOR NON-SHRINK GROUT SPECIFICATIONS.)

TRANSITION BETWEEN CHANGING SLOPES OF POST-TENSIONING DUCTS SHALL BE PROVIDED BY EITHER A CIRCULAR OR PARABOLIC CURVE WITH A MINIMUM LENGTH OF 3'-0".

POST-TENSIONING DUCTS SHALL BE PRESSURE GROUTED FROM ONE GROUT PIPE UNTIL ALL ENTRAPPED AIR IS EXPELLED AND GROUT BEGINS TO FLOW FROM THE OPEN GROUT PIPE. THE OPEN GROUT PIPE SHALL BE CLOSED AND A PRESSURE OF 50 PSI MAINTAINED FOR 15 SECONDS. THE GROUT COMPOSITION SHALL BE IN ACCORDANCE WITH THE CONTRACT SPECIAL PROVISIONS.

SEE SHEET B10 FOR ADDITIONAL DETAILS.

PRESTRESSED BOX GIRDER VOID FILL MATERIAL

THESE BOX SECTIONS ARE IN CONTACT WITH WATER FOR THE 100-YEAR FLOOD EVENT OR LESS. VOIDS IN THE SECTION MUST BE CAST WITH EXTRUDED POLYSTYRENE. SEE SPECIAL PROVISIONS.

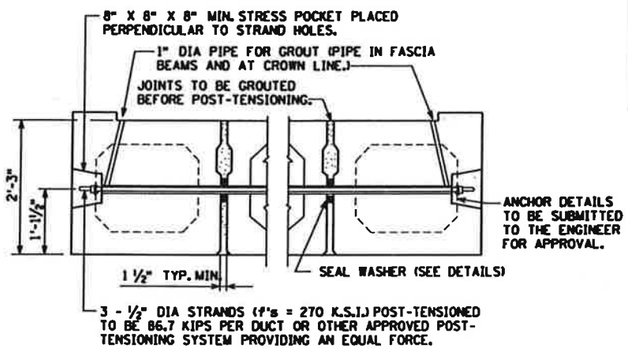

POST-TENSIONING DETAILS

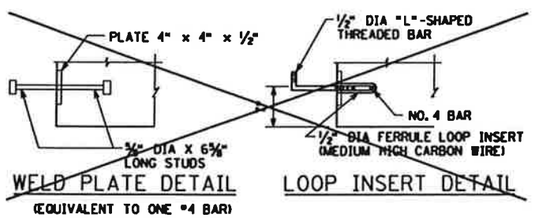

WELD PLATE DETAIL
(EQUIVALENT TO ONE #4 BAR)

LOOP INSERT DETAIL

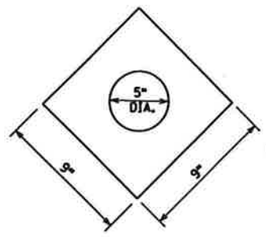

SEAL WASHER
POSITION AS SHOWN (MAY ALSO BE ROUND)

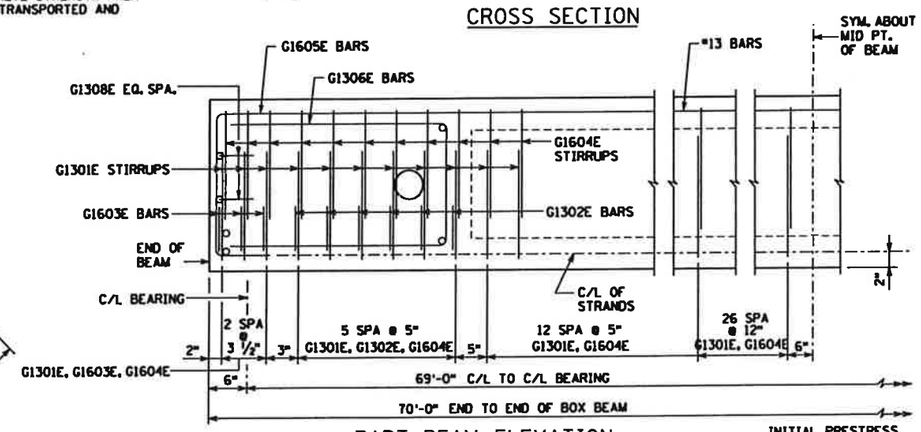

PART BEAM ELEVATION
(TRANSVERSE BARS NOT LABELED ARE #13 BARS)
(BEAMS ARE SYMMETRICAL ABOUT MID PT OF BEAM)

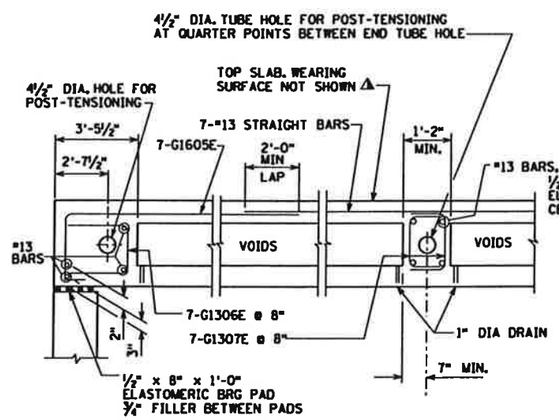

AT ABUTMENTS

TYPICAL LONGITUDINAL SECTION

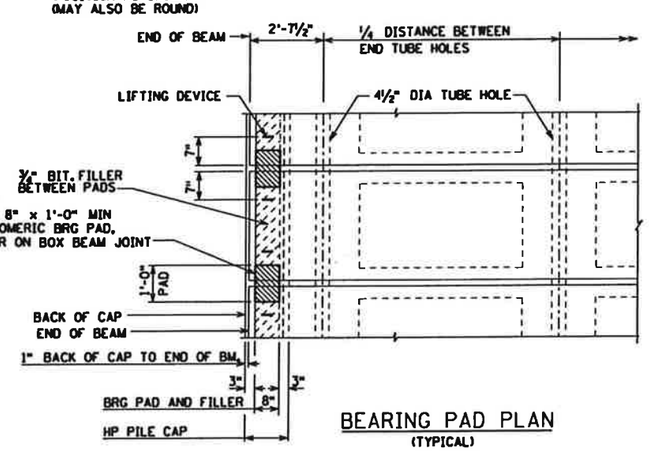

BEARING PAD PLAN
(TYPICAL)

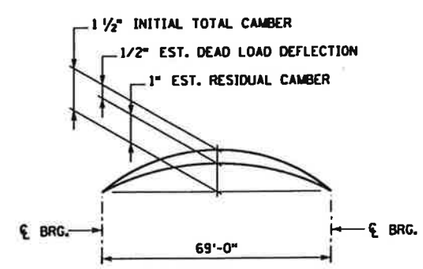

CAMBER DIAGRAM

DEAD LOAD DEFLECTION SHOWN IS FOR WEIGHT OF SLAB, WEARING COURSE, RAILING, SIDEWALK AND MEDIAN WHERE APPLICABLE. ENGINEER WILL TAKE ELEVATIONS AT TOP OF BEAMS AFTER ERECTION AND WILL ALLOW FOR DEFLECTION SHOWN TO ENABLE CONTRACTOR TO BUILD FORMS TO CORRECT GRADE AND SPECIFIED SLAB THICKNESS.

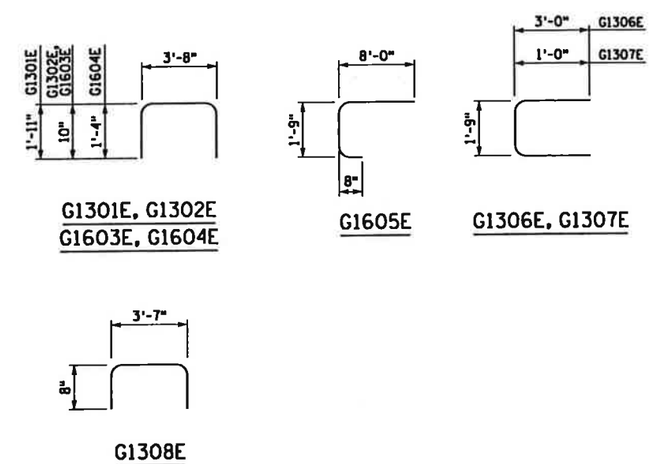

BAR BENDING DIAGRAMS

SEH
3535 VADNAIS CENTER DRIVE
ST PAUL, MN 55110
PHONE (651) 490-2000
FAX (651) 490-2150

I hereby certify that this plan, specification, or report was prepared by me or under my direct supervision and that I am a duly Licensed Professional Engineer under the laws of the state of Minnesota

Signature: _____ Date: 2-3-2010
Printed Name: JEFFREY A. JOHNSON Reg. No. 17280

TITLE: 27" PRESTRESSED CONCRETE BOX BEAMS DETAILS

SAP NO 07-598-27

DES: NCK	DR: DLF	APPROVED:
CHK: JAJ	CHK: NCK	

SHEET NO B7 OF B16 SHEETS

BRIDGE NO 07593

S:\AE\B\B1\ae\107252\5-dsgn\51-cadd\Cr 164\br-ldge\cbrcr164.bxi.dgn
CR 164 4/27/2010 11:18:52 PM

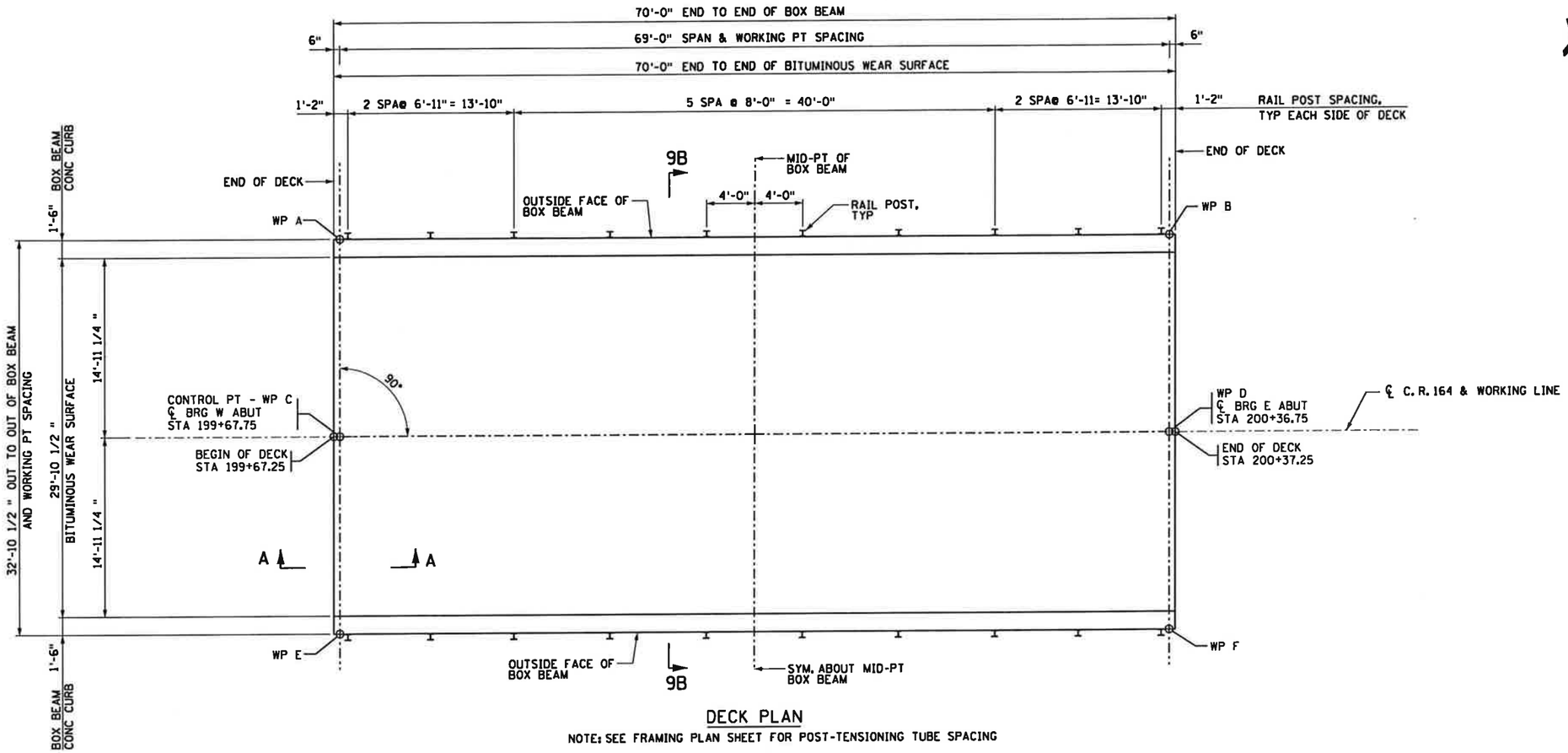

DECK PLAN

NOTE: SEE FRAMING PLAN SHEET FOR POST-TENSIONING TUBE SPACING

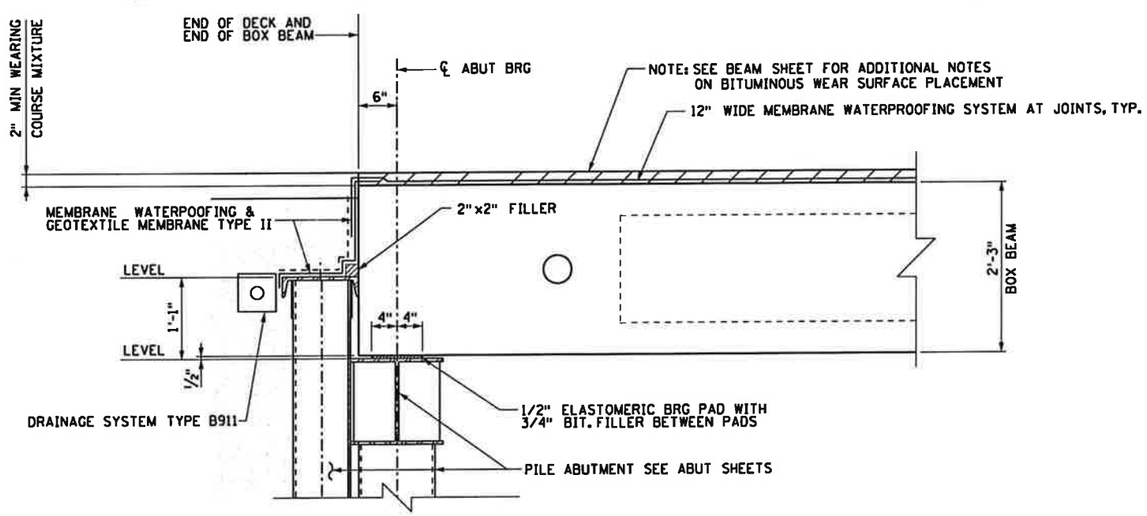

PARTIAL LONGITUDINAL SECTION A-A

NOTES:

ALL DIMENSIONS SHOWN ARE MEASURED ON A HORIZONTAL PLANE.

SEE SHEET B9 FOR QUANTITIES.

THE BITUMINOUS WEAR SURFACE THICKNESS DIMENSION IS MINIMUM. ANY TOLERANCES NECESSRY TO CORRECT CONSTRUCTION DISCREPANCIES ARE TO BE PLUS (+).

SEE SHEET B7 FOR BOX BEAM DETAILS.

BF = BACK FACE
FF = FRONT FACE
EF = EACH FACE

SEH
3535 VADNAIS CENTER DRIVE
ST PAUL, MN 55110
PHONE (651) 490-2000
FAX (651) 490-2150

I hereby certify that this plan, specification, or report was prepared by me or under my direct supervision and that I am a duly Licensed Professional Engineer under the laws of the state of Minnesota

Signature: _____ Date: 2-3-2010

Printed Name: JEFFREY A JOHNSON Reg. No. 17280

TITLE: SUPERSTRUCTURE

SAP NO 07-598-27

DES: NCK	DR: DLF	APPROVED:
CHK: JAJ	CHK: NCK	

SHEET NO B8 OF B16 SHEETS

BRIDGE NO 07593

S:\AE\B\Bluep\107252\5-dsgn\51-cadd\Cr 164\bridge\cbrcr164_ss1.dgn
CR 164
2/3/2010
9:03:31 AM

④① PREFORMED JOINT FILLER LIST

TYPE	NO	SIZE	LOCATION
FILLER	12	3/4"x 8"x 3'-6"	ABUT SEATS BETWEEN BRG PADS
FILLER	4	3/4"x 8"x 3'-1"	ABUT SEATS BETWEEN BRG PADS AT ENDS
FILLER	2	2" x 2" x 34'-0"	TOP OF SHEET PILE AT BW. ENDS

SUMMARY OF QUANTITIES FOR SUPERSTRUCTURE

	ITEM	UNIT	QUANTITY
③	TYPE SP 19.0 WEARING COURSE MIXTURE (2, B)	TON	41
	BITUMINOUS MATERIAL FOR TACK COAT	GALLON	37
⑦	STRUCTURAL TUBE RAILING DESIGN SPECIAL	LIN FT	136
⑧	ELASTOMERIC BEARING PAD, TYPE 1	EACH	18
⑤	PRESTRESSED CONCRETE BOX BEAMS 27x48	LIN FT	560
②①	PREFORMED JOINT FILLER	——	——
⑨	JOINT WATERPROOFING	LIN FT	518

① INCLUDED IN PRICE BID FOR OTHER ITEMS.

② SEE JOINT FILLER TABLE.

③ THE APPROXIMATE BITUMINOUS QUANTITIES ARE:

WEARING COURSE MIXTURE = 2091 SQ FT

④ TABLE IS FOR CONTRACTORS CONVENIENCE ONLY. CUT TO FIT.

⑤ INCLUDES GROUT BETWEEN BOX BEAMS AND POST-TENTIONING.

⑥ NOTE 6 NOT USED.

⑦ MEASURED FROM BRIDGE END POST C/L TO BRIDGE END POST C/L.

⑧ ELASTOMERIC BEARING PAD, TYPE 1
SIZE 1/2"THICK X 0'-8"WIDE X 1'-0"LONG

⑨ 12" WIDE MEMBRANE JOINT WATERPROOFING IN ACCORDANCE WITH MnDOT 2481. INCLUDES BOX BEAM JOINTS ONLY.
SEE NOTE 5 ON SHEET B2.

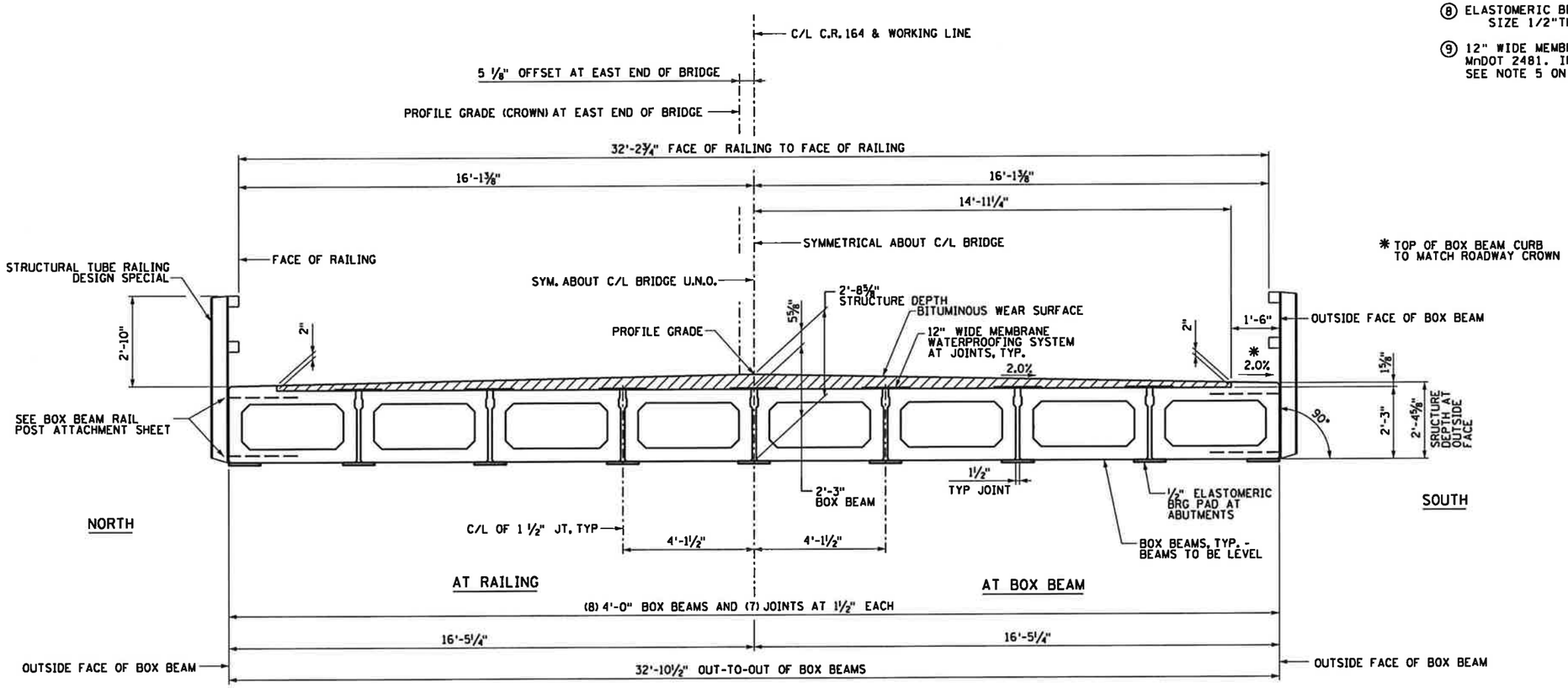

TYPICAL TRANSVERSE SECTION 9B-9B

SEH
3535 VADNAIS CENTER DRIVE
ST PAUL, MN 55110
PHONE (651) 490-2000
FAX (651) 490-2150

I hereby certify that this plan, specification, or report was prepared by me or under my direct supervision and that I am a duly Licensed Professional Engineer under the laws of the state of Minnesota

Signature: _____ Date: 2-3-2010

Printed Name: JEFFREY A JOHNSON Reg. No. 17280

TITLE: SUPERSTRUCTURE

SAP NO 07-598-27

DES: NCK	DR: DLF	APPROVED:
CHK: JAJ	CHK: NCK	

SHEET NO B9 OF B16 SHEETS

BRIDGE NO 07593

S:\AE\B\B1uap\107252\5-dsgn\51-cadd\Cr 164\bridge\cbrcr164_ss2.dgn CR 164 2/3/2010 9:03:32 AM

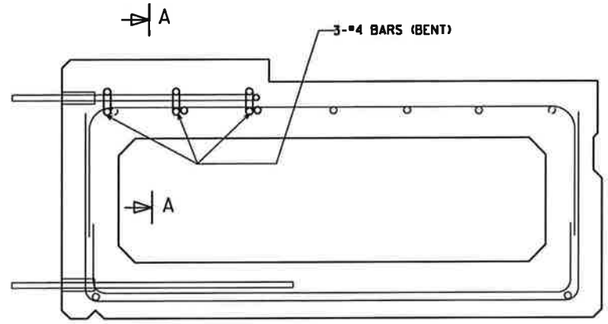

SECTION THRU EXTERIOR GIRDER

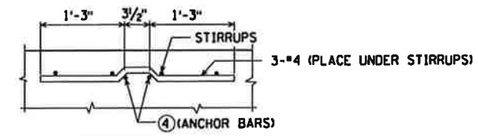

SECTION A

LEGEND

① W6 x 25. PLACE POSTS NORMAL TO GRADE LINE. PLACE POSTS VERTICAL.

② 1" DIA. STUD WITH NUT & WASHER. FOUR REQ'D. PER POST. A325.*

③ THREADED BAR COUPLER FOR 1" DIA. STUD. ACCEPTABLE PRODUCTS ARE WILLIAMS REBAR FLANGE COUPLERS BY WILLIAMS FORM ENGINEERING CORP. OR DOWEL BAR REPLACEMENTS BY DAYTON SUPERIOR. FOUR REQ'D. PER POST. EXPOSED FLANGE TO BE GALVANIZED.*

④ ANCHOR BAR 1" DIA. THREADED REINFORCEMENT BAR BENT AS SHOWN IN ANCHOR DETAILS. GRADE 60. TWO REQ'D. PER POST. (TOP)**

⑤ ANCHOR BAR, 1" DIA. THREADED REINFORCEMENT BAR (STRAIGHT), GRADE 60. TWO REQ'D. PER POST. (BOTTOM)**

⑥ 1 ¼" x 1 ¾" SLOTTED HOLES IN POST FOR STUD NO. 2. LONG DIMENSION OF SLOTTED HOLE TO BE VERTICAL.

*SHALL BE MECHANICALLY GALVANIZED OR ELECTRO-PLATED.

**NOT GALVANIZED OR ELECTRO-PLATED.

NOTES

SEE GENERAL NOTES ON NEXT SHEET.

FILL BOLT SLOT OPENINGS IN POST SHIMS AND POSTS WITH NON-STAINING GRAY NON-BITUMINOUS JOINT SEALER.

STEEL POST SHIMS MAY BE USED AT POSTS WHERE REQ'D. FOR ALIGNMENT.

BID ITEM SHALL BE "STRUCTURAL TUBE RAILING DESIGN SPECIAL" WHICH INCLUDES ALL ITEM SHOWN.

SEE SUPERSTRUCTURE SHEET FOR RAIL POST SPACING.

SEE SHEET B7 FOR BOX BEAM FABRICATION DETAILS.

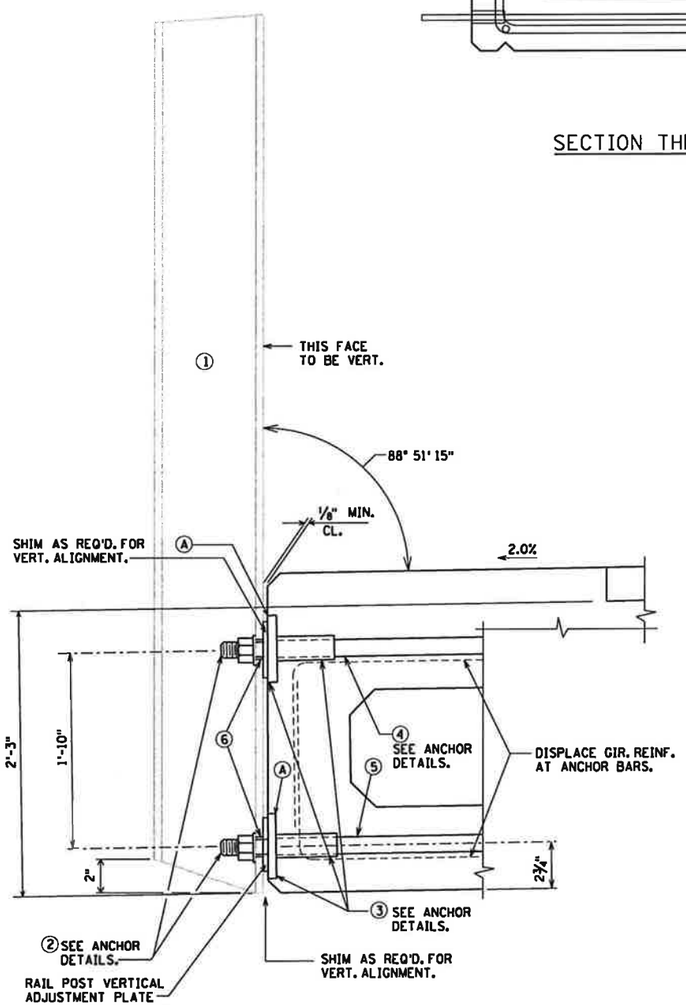

SECTION THRU RAILING

Ⓐ SEAL TOP & VERT. EDGES OF SHIMS, VERT. ADJUSTMENT PLATES, AND POST TO GIRDER CONTACT AREAS WITH NON-STAINING GRAY BITUMINOUS JOINT SEALER.

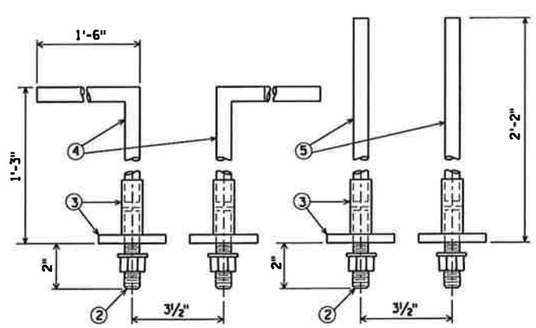

PLAN
TOP ANCHOR

PLAN
BOTTOM ANCHOR

ANCHOR DETAILS

ANCHORS MAY BE FABRICATED IN A CAGE IF OPTED BY THE MFG'R.

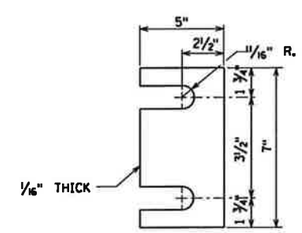

POST SHIM DETAIL
(14 PER POST)

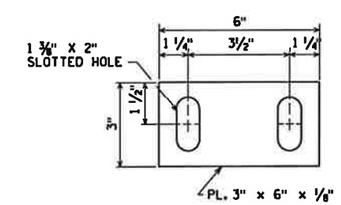

RAIL POST VERTICAL ADJUSTMENT PLATE
(1 PER POST)

SEH
3535 VADNAIS CENTER DRIVE
ST PAUL, MN 55110
PHONE (651) 490-2000
FAX (651) 490-2150

I hereby certify that this plan, specification, or report was prepared by me or under my direct supervision and that I am a duly Licensed Professional Engineer under the laws of the state of Minnesota

Signature: _____ Date: 2-3-2010

Printed Name: JEFFREY A. JOHNSON Reg. No. 17280

TITLE: PRESTRESSED BOX BEAM RAILING POST ATTACHMENT

SAP NO 07-598-27

DES: NCK	DR: DLF	APPROVED:
CHK: JAJ	CHK: NCK	

SHEET NO B10 OF B16 SHEETS

BRIDGE NO 07593

S:\ME\B\Bluep\107252\5-dsgn\51-cadd\Cr 164\Bridge\cbrcr164_tr1.dgn CR 164 4/22/2010 9:54:01 AM

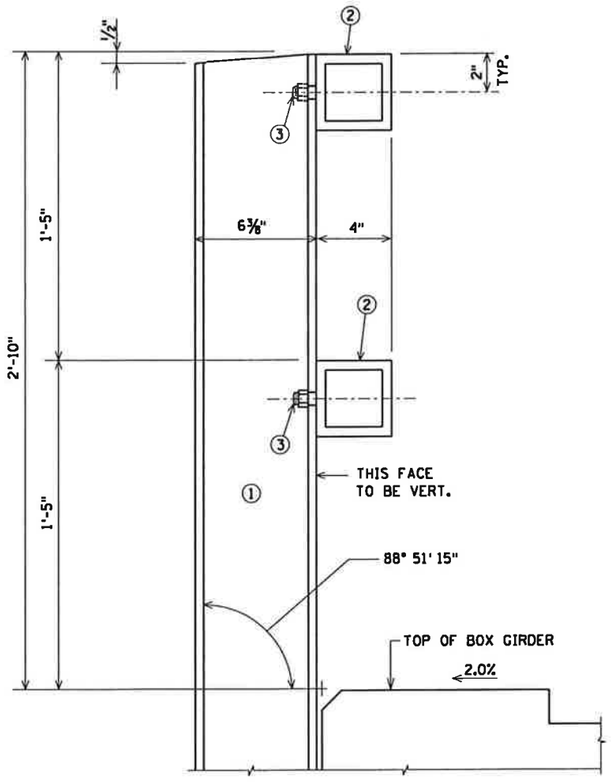

SECTION THRU RAILING ON DECK

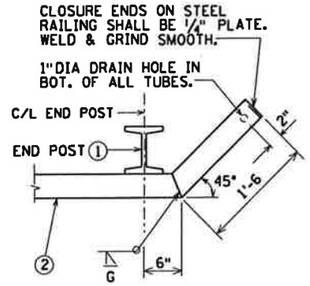

PLAN

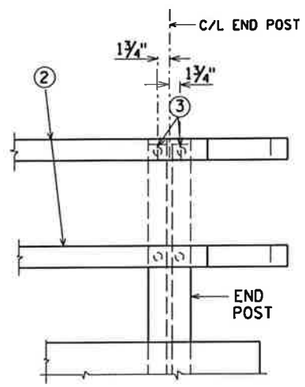

ELEVATION

DETAIL AT END POST

NOTE: GUARDRAIL EXPANSION CONNECTION DETAILS PROVIDED BY THE COUNTY AND INSTALLED BY THE CONTRACTOR

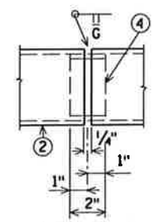

SHOP RAIL SPLICE DETAIL

(LOCATION MUST BE SHOWN ON SHOP DRAWINGS)

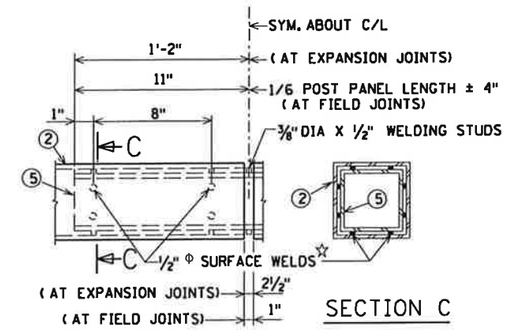

FIELD ERECTION JOINT DETAIL

☆ MIN. 5/8" FLAT SURFACE DIA. PUNCHINGS OR STUDS MAY BE USED AS AN ALTERNATE.

SECTION C

LEGEND

1. W6X25 WITH 1 1/4" DIA. HOLES ON EACH SIDE OF POST FOR STUD NO. 6. CUT BOTTOM OF POST TO MATCH CROSS SLOPE OF ROADWAY. PLACE POST VERTICAL.
2. TS 4 X 4 X 0.25 STRUCTURAL TUBING, CONFORMING TO ASTM DESIGNATION A501 OR A500 GRADE B. ATTACH TO NO. 1 WITH TWO NO. 6 STUDS.
3. 5/8" DIA. X 1 1/2" LG. SHOP WELDED STUDS WITH HEX NUT AND 2" WASHERS.
4. SQUARE SLEEVE FABRICATED FROM 1/4" PLATE. PROVIDE "SLIDING FIT" WITH A MINIMUM OUT TO OUT DIMENSION OF 3 13/32".
5. TS 3 X 3 X 0.25 X (2'-4" AT EXPANSION JOINTS) & (1'-10" AT FIELD JOINTS) LONG. PROVIDE 1/2" DIA. SURFACE WELDS ON ALL SIDES AS SHOWN. GRIND WELDS TO FIT FREE INTO I.D. OF NO. 5. PROVIDE 3/8" DIA. X 1/2" WELDING STUDS ON TOP AND BOTTOM SURFACES AT CENTERLINE.

GENERAL NOTES

BID ITEM SHALL BE "STRUCTURAL TUBE RAILING DESIGN SPECIAL", WHICH INCLUDES ALL ITEMS SHOWN.

RAILING SHALL BE FABRICATED IN LENGTHS THAT INCLUDE 3 OR 4 POSTS

ALL MATERIAL, EXCEPT 1" DIA. ANCHORAGE BAR SHALL BE GALVANIZED AFTER FABRICATION.

ALL MATERIALS USED IN FABRICATION SHALL BE MADE FROM MATERIALS CONFORMING TO ASTM DESIGNATION A709 GRADE 36 UNLESS NOTED OTHERWISE.

PRIOR TO GALVANIZING, ALL STEEL RAILING POSTS & STEEL TUBING SHALL BE GIVEN A NO. 6 BLAST CLEANING BY SSPC SPECIFICATIONS.

SEE SUPERSTRUCTURE SHEETS FOR RAIL POST SPACING.

STRUCTURAL TUBE RAILING DESIGN IS A WISCONSIN DOT STANDARD TUBULAR METAL RAILING TYPE F. THIS RAILING MEETS NCHRP REPORT 350 EVALUATION CRITERIA FOR TEST LEVEL 2 (TL-2).

SEH
3535 VADNAIS CENTER DRIVE
ST PAUL, MN 55110
PHONE (651) 490-2000
FAX (651) 490-2150

I hereby certify that this plan, specification, or report was prepared by me or under my direct supervision and that I am a duly Licensed Professional Engineer under the laws of the state of Minnesota

Signature: _____ Date: 2-3-2010

Printed Name: JEFFREY A JOHNSON Reg. No. 17280

TITLE: STRUCTURAL TUBE RAILING DESIGN SPECIAL

SAP NO 07-598-27

DES: NCK	DR: DLF	APPROVED:
CHK: JAJ	CHK: NCK	

SHEET NO B11 OF B16 SHEETS

BRIDGE NO 07593

S:\AE\B\Bluep\107252\5-dsgn\51-cadd\Cr 164\bridge\cbrcr164_tr2.dgn CR 164 2/3/2010 9:03:36 AM

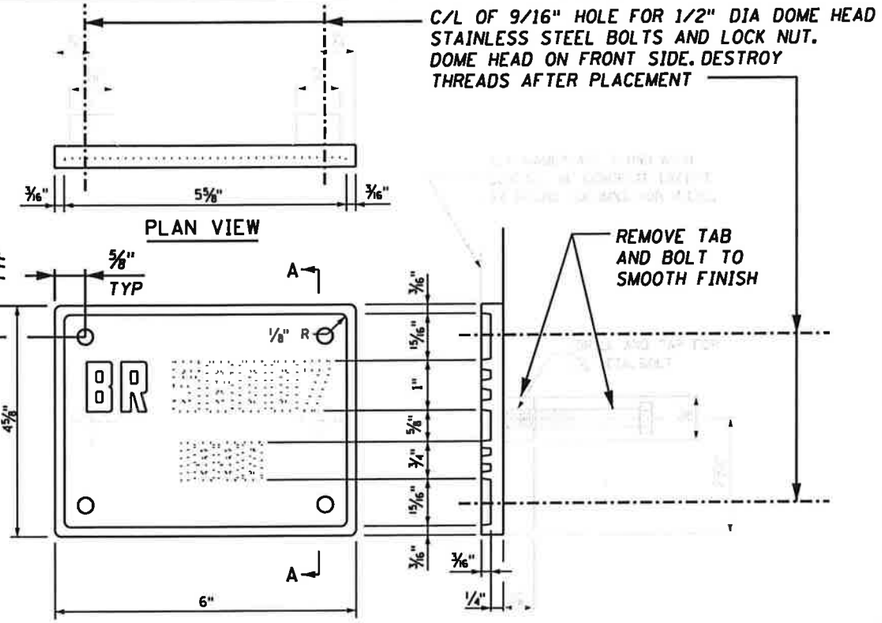

THE DASHED NUMBERS SHOWN ABOVE ARE FOR ILLUSTRATION. DATA TO BE SHOWN ON NAMEPLATE IS AS FOLLOWS:

BRIDGE 07593

YEAR 2010 (OR YEAR CONSTRUCTED)

NOTE:
DITHERED LINES INDICATE MODIFIED ITEMS.

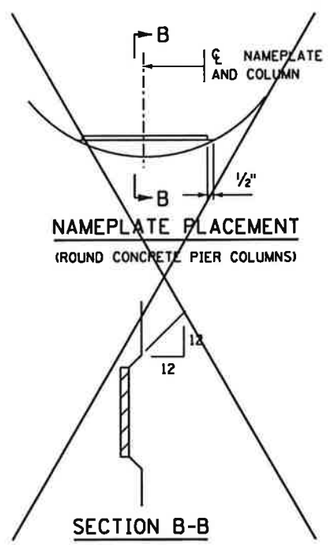

NAMEPLATE PLACEMENT
(ROUND CONCRETE PIER COLUMNS)

SECTION B-B

NUMBERS FOR NAMEPLATE

NOTES:

NO SHOP DRAWING REQUIRED.

MATERIAL SHALL COMPLY WITH Mn/DOT SPEC. 3327.

LETTERS AND NUMBERS SHALL CONFORM TO THOSE SHOWN.

DRAFT ON LETTERS AND NUMBERS SHALL NOT BE MORE THAN 3° IN 12".

HORIZONTAL SPACING OF LETTERS AND NUMBERS SHALL PRODUCE A BALANCED LAYOUT IN PROPORTION TO SPACING SHOWN.

TOP SURFACE OF LETTERS, NUMBERS AND FRAMES SHALL BE BURNISHED.

FURNISH 4 STAINLES STEEL DOME HEAD BOLTS 1/2" DIA. x 2" LONG & LOCK NUT WITH EACH PLATE.

ALL DIMENSIONS FOR 3/4" HIGH LETTERS AND NUMBERS SHALL BE IN DIRECT PROPORTION TO THOSE SHOWN FOR THE 1" HIGH LETTERS AND NUMBERS.

APPROVED: NOVEMBER 22, 2002 Daniel L Dorgan STATE BRIDGE ENGINEER	STATE OF MINNESOTA DEPARTMENT OF TRANSPORTATION BRIDGE NAMEPLATE (FOR NEW BRIDGES) (MODIFIED)	REVISION	DETAIL NO. B101 (MODIFIED)

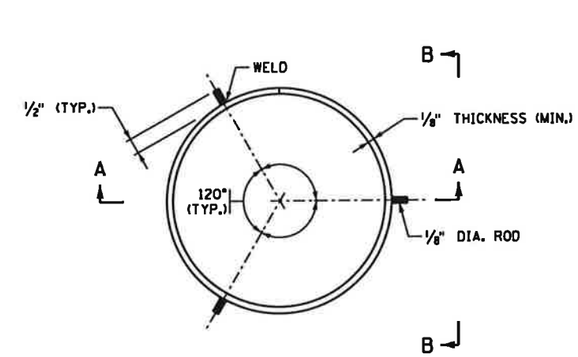

PLAN VIEW SPLICE
PILE NOT SHOWN

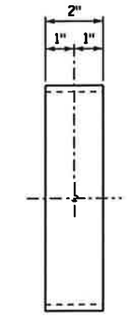

SECTION B-B
PILE NOT SHOWN

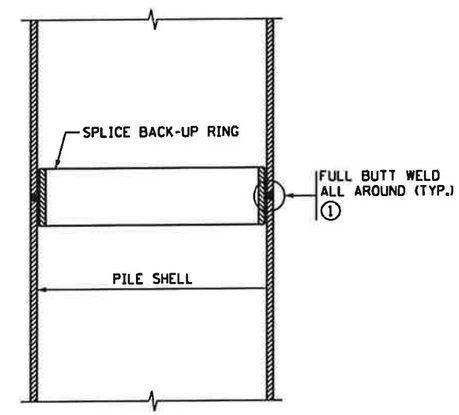

SECTION A-A

NOTES:

APPROVED COMMERCIAL PILE SPLICE BACK-UP RING MAY BE USED IN LIEU OF THE TYPE DETAILED. BACK-UP RING SHALL HAVE A TIGHT FIT.

WELDING ELECTRODES SHALL BE CELLULOSIC TYPE ELECTRODES E-6010 OR E-6011.

ELECTRODES WHICH HAVE BECOME WET, SOILED OR DAMAGED SHALL NOT BE USED.

WELDING SHALL NOT BE DONE WHEN THE AMBIENT TEMPERATURE IS LOWER THAN 0° F. OR WHEN THE PILE IS WET OR EXPOSED TO FALLING RAIN OR SNOW. WHEN THE PILE METAL TEMPERATURE IS BELOW 32° F., THE PILE METAL IN THE AREA OF THE WELD SHALL BE HEATED TO A MINIMUM TEMPERATURE OF 70° F. AND MAINTAINED AT THIS TEMPERATURE DURING WELDING.

1 FOR PILE SHELL THICKNESSES GREATER THAN 1/2", USE A B-U4a WELD CONFIGURATION.

APPROVED: NOVEMBER 22, 2002 Daniel L Dorgan STATE BRIDGE ENGINEER	STATE OF MINNESOTA DEPARTMENT OF TRANSPORTATION PILE SPLICE (CAST-IN-PLACE CONCRETE PILES)	REVISION	DETAIL NO. B201

SEH
3535 VADNAIS CENTER DRIVE
ST PAUL, MN 55110
PHONE (651) 490-2000
FAX (651) 490-2150

I hereby certify that this plan, specification, or report was prepared by me or under my direct supervision and that I am a duly Licensed Professional Engineer under the laws of the state of Minnesota

Signature: _____ Date: 2-3-2010

Printed Name: JEFFREY A JOHNSON Reg. No. 17280

TITLE: B DETAILS

SAP NO 07-598-27

DES: DLF	DR: DLF	APPROVED:	BRIDGE NO
CHK: NCK	CHK: NCK		07593
SHEET NO B12 OF B16 SHEETS			

S:\AE\B\Bluep\107252\5-dsgn\51-cadd\Cr 164\bridge\cbrcr164_b101-b201.dgn CR 164 2/3/2010 9:03:37 AM

SUMMARY OF QUANTITIES FOR DRAINAGE SYSTEM

2" DIA. PERFORATED PIPE	64	LIN. FT.
2" DIA. NON-PERFORATED PIPE	20	LIN. FT.
45° ELBOW		EACH
90° ELBOW		EACH
2" DIA. END CAP	2	EACH
2" DIA. COUPLING	2	EACH
PIPE SLEEVE		EACH
③ PRECAST CONCRETE HEADWALL	2	EACH

THE SUMMARY OF QUANTITIES FOR DRAINAGE SYSTEM IS AS SHOWN ABOVE. ANY ADDITIONAL MINOR ITEMS OR SLIGHT CHANGES OF QUANTITIES REQUIRED SHALL BE FURNISHED BY THE CONTRACTOR WITH NO ADDITIONAL COMPENSATION.

PAYMENT WILL BE INCLUDED IN THE SINGLE LUMP SUM PRICE FOR ITEM 2502.601 "DRAINAGE SYSTEM, TYPE (B911)".

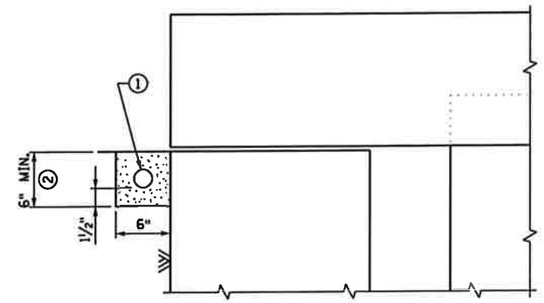

SECTION AT ABUTMENT

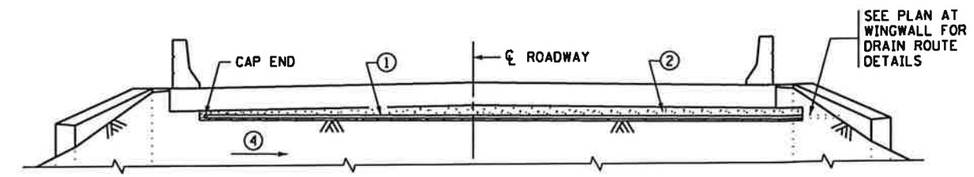

ELEVATION AT BACK FACE OF ABUTMENT

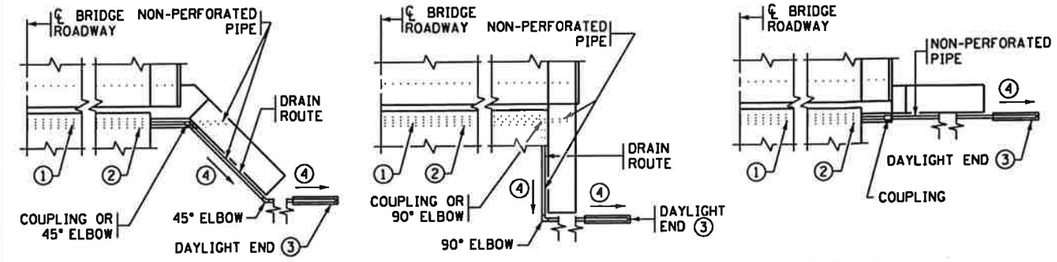

45° WINGWALL PARALLEL WINGWALL STRAIGHT WINGWALL

PLAN AT WINGWALL

NOTES:

ALL PIPE SHALL BE PER Mn/DOT SPEC. 3245.

① 2" NOMINAL DIA. THERMOPLASTIC PERFORATED PIPE. SLOPE PIPE TO DITCH ON LOW SIDE. WRAP PIPE WITH GEOTEXTILE AS PER Mn/DOT SPEC. 3733.

② BACKFILL WITH FINE AGGREGATE, Mn/DOT SPEC. 3149, MODIFIED TO 0-3% PASSING A NO. 200 SIEVE.

③ PRECAST CONCRETE HEADWALL WITH A RODENT SCREEN ON THE END. SEE STANDARD PLATE 3131 FOR DETAILS.

④ ⅛" PER FT. MINIMUM SLOPE.

APPROVED: NOVEMBER 22, 2002	STATE OF MINNESOTA DEPARTMENT OF TRANSPORTATION	REVISION	DETAIL NO.
Daniel L Dorgan STATE BRIDGE ENGINEER	DRAINAGE SYSTEM (FOR SLAB OVER PARAPET ABUTMENTS) (WITH NO APPROACH TREATMENT)		B911

SEH
3535 VADNAIS CENTER DRIVE
ST PAUL, MN 55110
PHONE (651) 490-2000
FAX (651) 490-2150

I hereby certify that this plan, specification, or report was prepared by me or under my direct supervision and that I am a duly Licensed Professional Engineer under the laws of the state of Minnesota

Signature: _____ Date: 2-3-2010

Printed Name: JEFFREY A JOHNSON Reg. No. 17280

TITLE: B DETAILS

SAP NO 07-598-27

DES: MAW	DR: MAW	APPROVED:	BRIDGE NO
CHK: NCK	CHK: NCK		07593
SHEET NO B13 OF B16 SHEETS			

S:\AE\B\B1wsp\107252\5-dgn\51-coddi\Cr 164\bridge\cbrcr164_b911.dgn CR 164 2/3/2010 9:03:38 AM

CONCRETE WEARING COURSE

☐ LOW SLUMP

☐ OTHER _____
TYPE OR MANUFACTURER

EXPANSION JOINTS

JOINT MANUFACTURER

MANUFACTURER'S IDENTIFICATION _____
MFR'S No. AND/OR LETTER DESIGNATION FOR JOINT USED

GLAND MANUFACTURER _____
NAME AND ADDRESS (CITY, STATE)

SIZE OF GLAND _____

MANUFACTURER'S IDENTIFICATION _____
MFR'S No. AND/OR LETTER DESIGNATION FOR GLAND USED

ELASTOMERIC BEARING PADS

PAD MANUFACTURER _____
NAME AND ADDRESS (CITY, STATE)

SPECIAL SURFACE FINISH

SYSTEM: _____ COLOR: _____

FINISHING ROADWAY FACES OF BARRIER RAILING

TYPE: _____ COLOR: _____

ANTI-GRAFFITI COATING

MANUFACTURER _____
NAME AND ADDRESS (CITY, STATE)

PRODUCT NAME: _____ LOCATION: _____

PAINT SYSTEM

Mn/DOT SPECIFICATION NUMBER _____
2478 OR 2479 OR OTHER

MANUFACTURER _____
NAME AND ADDRESS (CITY, STATE)

PRIME COAT _____
Mn/DOT MATERIAL SPECIFICATION NUMBER

INTERMEDIATE COAT _____
Mn/DOT MATERIAL SPECIFICATION NUMBER

FINISH COAT _____ _____
Mn/DOT MATERIAL SPECIFICATION NUMBER COLOR

PLAN QUALITY

RATE 1 (AGREE), 2 (NEUTRAL), OR 3 (DISAGREE, PLEASE COMMENT BELOW)

DIMENSIONING AND DETAILING ADEQUATELY DESCRIBED REQUIRED CONSTRUCTION. _____

BAR LISTS AND QUANTITIES WERE TYPICALLY COMPLETE AND FREE OF ERRORS. _____

SCALE OF DRAWINGS AND OVERALL LEGIBILITY OF LINES AND TEXT WAS GOOD. _____

(SB) SPECIAL PROVISIONS ADEQUATELY DESCRIBED SPECIAL WORK AND PAYMENT. _____

COMMENTS: _____

NUMBER OF BRIDGE
SUPPLEMENTAL AGREEMENTS: _____ COST: $ _____

LIST SIGNIFICANT ERRORS OR OMISSIONS IN PLAN DETAILS OR PAY QUANTITIES IN THE SPACE PROVIDED AT RIGHT.

BRIDGE REMOVAL / BRIDGE OPENING

NUMBER OF AND DATE OLD BRIDGE WAS REMOVED (IF APPLICABLE):

BRIDGE NUMBER _____ DATE REMOVED _____

DATE NEW BRIDGE WAS OPENED TO TRAFFIC _____

NOTIFY THE BRIDGE OFFICE BRIDGE MANAGEMENT UNIT WITH THIS INFORMATION AS SOON AS POSSIBLE. (651) 366-4557

OTHER ITEMS ①

① UTILITIES ADDED DURING CONSTRUCTION AND SPECIALTY ITEMS.

FINAL QUANTITIES ENTERED ON SCHEDULE OF QUANTITIES: YES ☐ NO ☐

SUMMARY OF SIGNIFICANT AS-BUILT CHANGES

THE AS-BUILT INFORMATION WAS ADDED TO THE PLAN BY:

_____ _____
INSPECTOR(S) SIGNATURE DATE

CHECKED BY: _____ _____
PROJECT ENGINEER/SUPERVISOR SIGNATURE DATE

AT THE TIME OF THE FINAL, THIS COMPLETED AS-BUILT BRIDGE DATA SHEET MUST BE SUBMITTED TO THE BRIDGE OFFICE - ATTN: REGIONAL CONSTRUCTION ENGINEER (MS610).

REVISION: 10-28-2008

APPROVED: SEPTEMBER 26, 2003

STATE BRIDGE ENGINEER

AS-BUILT DETAILS
(AS NEEDED)

SEH
3535 VADNAIS CENTER DRIVE
ST PAUL, MN 55110
PHONE (651) 490-2000
FAX (651) 490-2150

I hereby certify that this plan, specification, or report was prepared by me or under my direct supervision and that I am a duly Licensed Professional Engineer under the laws of the state of Minnesota

Signature: _____ Date: 2-3-2010

Printed Name: JEFFREY A JOHNSON Reg. No. 17280

TITLE: AS-BUILT BRIDGE DATA

SAP NO 07-598-27

DES:	DR:	APPROVED:
CHK:	CHK:	

SHEET NO B14 OF B16 SHEETS

FIG. 5-397.900

BRIDGE NO 07593

S:\AE\B\Bluep\107252\5-dsgn\51-cadd\Cr 164\bridge\cbrcr164_fig7900a.dgn CR 164 2/3/2010 9:03:40 AM

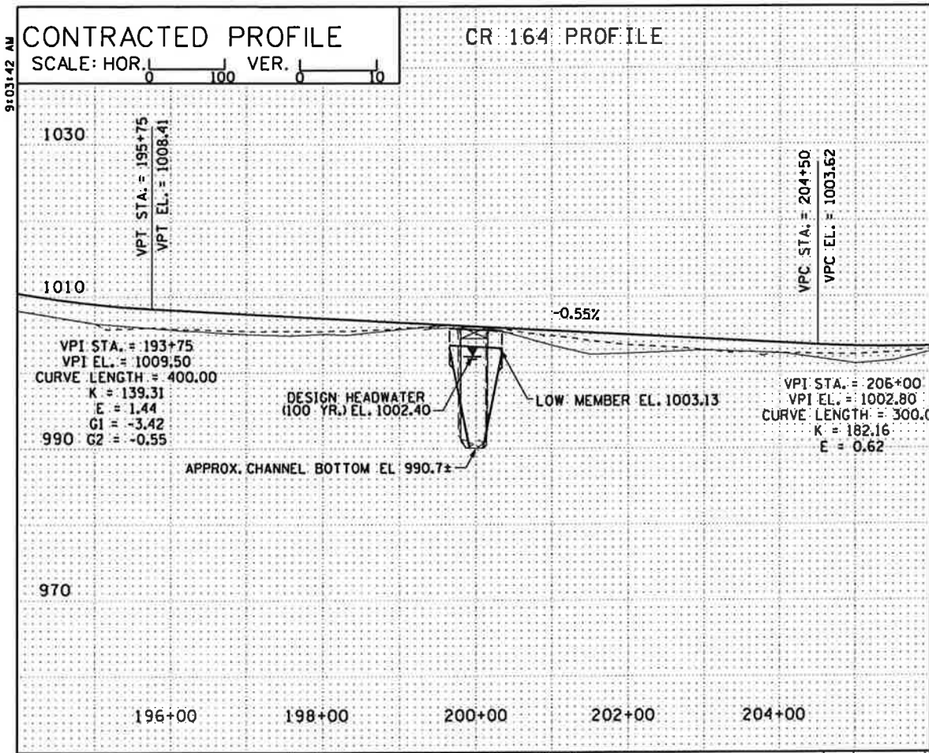

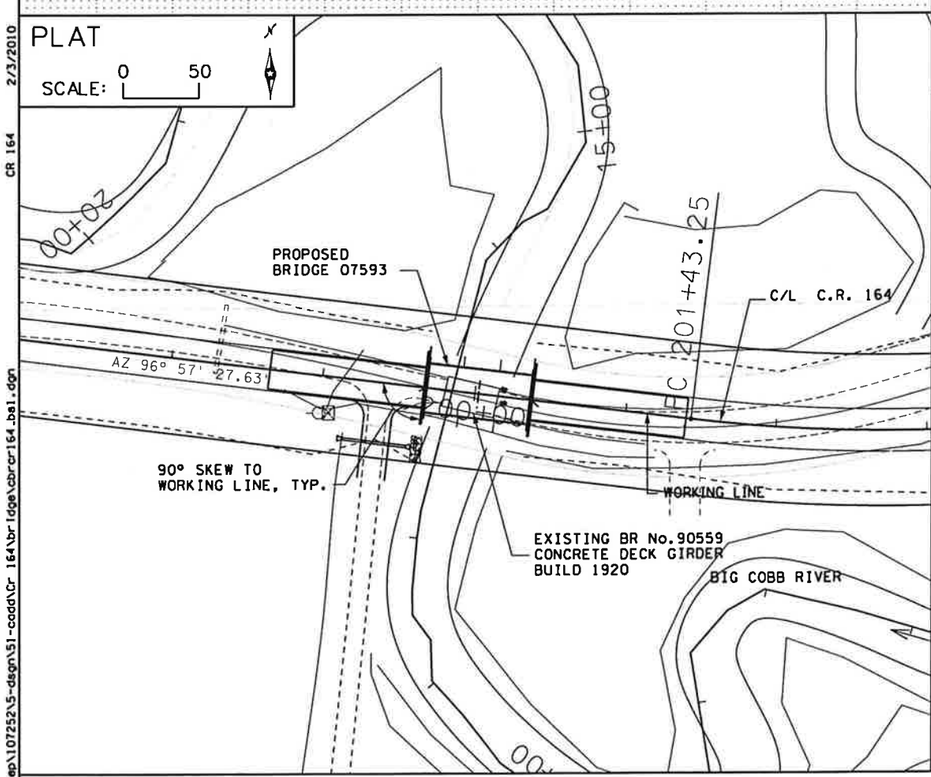

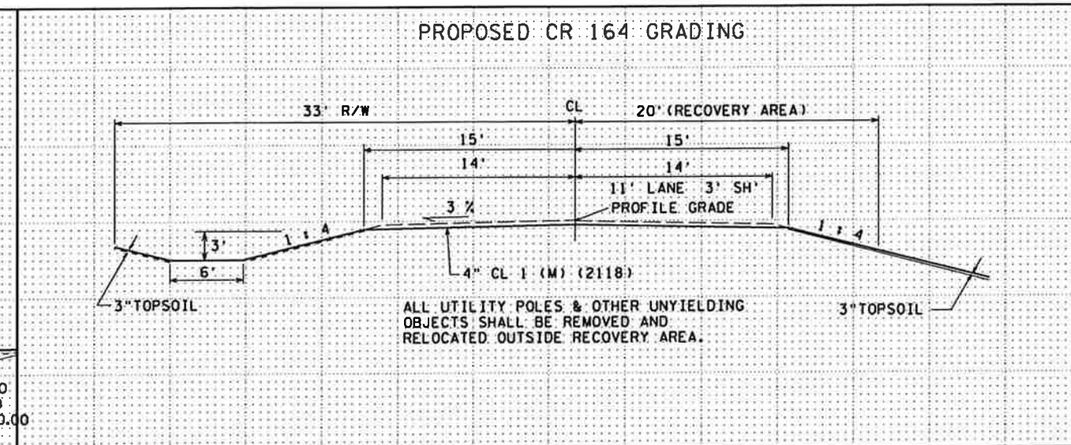

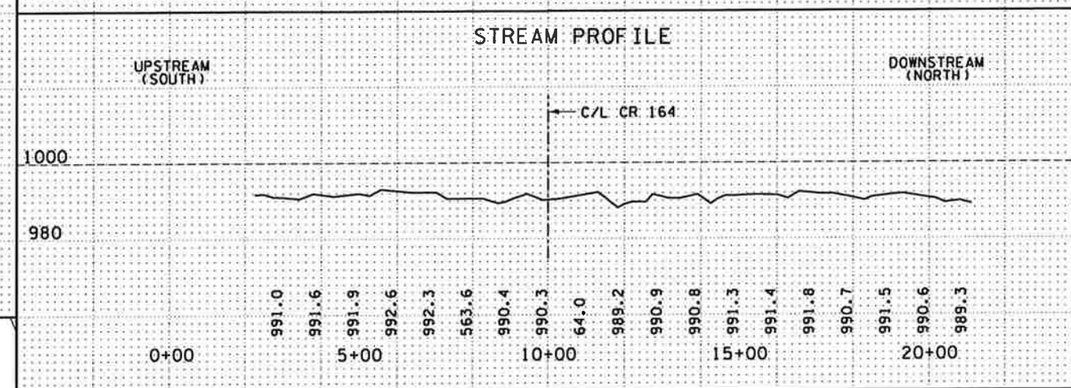

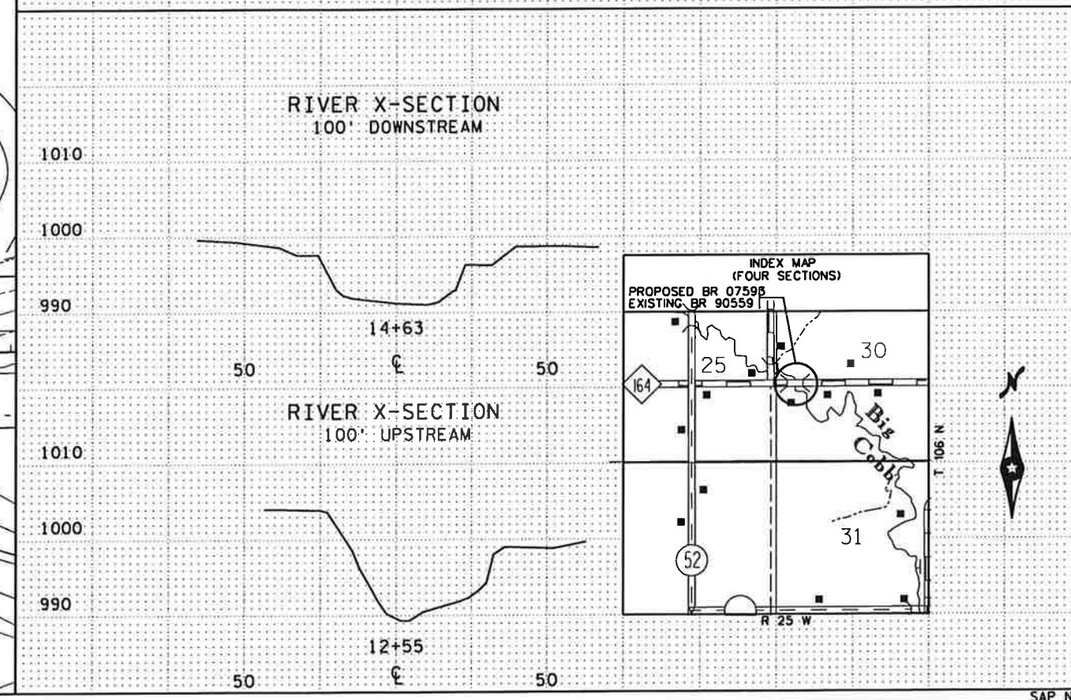

LOCATION ENGINEER'S OBSERVATIONS AT BRIDGE SITE

1. SPECIAL FEATURES: WATERFALLS, DAMS, FLOODS, ICE, DEBRIS, SLIDING BANKS, RECREATIONAL BOATING.
2. OTHER BRIDGES OR CULVERTS OVER THE SAME STREAM (PARTICULARLY STRUCTURES WHICH CARRY HIGH WATER WITHOUT OVERFLOW OF ROADWAY): GIVEN LOCATION, TYPE, LENGTH, HEIGHT ABOVE HIGH WATER, CROSS-SECTIONAL AREA ETC.
3. APPARENT HIGHWATER ELEVATION OBTAINED FROM:
   HIGH WATER 1007.2 (1965 Flood)
   FROM LOCAL FARMER
4. OTHER DATA: APPROX. VELOCITY OF WATER AT TIME OF SURVEY.

HYDRAULIC ENGINEERS RECOMMENDATION

DATE: 8-21-2009

STREAM OR DITCH DESIGNATION: BIG COBB RIVER
DRAINAGE AREA: 137.4 SQ. MI.
MAX. FLOOD ON RECORD: N/A C.F.S. (YEAR 1965)
MAXIMUM OBSERVED HIGHWATER ELEVATION: 1007.2 FT.
DESIGN FLOOD (100 YR. FREQ.): 3210 C.F.S.
DESIGN STAGE ELEVATION: 1002.40 FT.
DESIGN MEAN VELOCITY THROUGH STRUCTURE: 6.59 F.P.S.
TOTAL STAGE INCREASE: -0.07 FT.
LOW MEMBER AT OR ABOVE ELEVATION: 1003.13 FT.
WATERWAY AREA REQUIRED BELOW ELEV. 1002.08 = 487.22 SQ. FT. AT RIGHT ANGLES TO CHANNEL
BASIC FLOOD (100 YR. FREQ.): 3210 C.F.S.
STAGE ELEVATION: 1002.40 FT.
TOTAL STAGE INCREASE: -0.07 FT.
MEAN VELOCITY THROUGH STRUCTURE: 6.59 F.P.S.
FLOWLINE ELEVATION: 990.71 FT. SKEW ANGLE: 0°
ESTIMATED DEPTH OF PIER SCOUR = N/A FT. (500 YR. FREQ.)

BRIDGE SURVEY SHEETS MADE FROM :
BLUE EARTH COUNTY SURVEY

BENCH MARK ELEVATION 1005.53 (M.S.L. xxxx ADJ.)
NAME & LOCATION:
DBL. SPK. P.P. 47' RT. STA. 195+81

BRIDGE SURVEY

PROPOSED BRIDGE LOCATED
CR 164 OVER THE BIG COBB RIVER
IN BLUE EARTH COUNTY

SEC 30 TWP 106 N R 25 W
MEDO TOWNSHIP BLUE EARTH CO

BRIDGE NO. 07593

SEH
3535 VADNAIS CENTER DRIVE
ST PAUL, MN 55110
PHONE (651) 490-2000
FAX (651) 490-2150

I hereby certify that this plan, specification, or report was prepared by me or under my direct supervision and that I am a duly Licensed Professional Engineer under the laws of the state of Minnesota
Signature: Date: 2-3-2010
Printed Name: JEFFREY A JOHNSON Reg. No. 17280

TITLE: BRIDGE SURVEY

SAP NO 07-598-27

DES: MAW	DR: MAW	APPROVED:	BRIDGE NO 07593
CHK: JAJ	CHK: JAJ		
SHEET NO B15 OF B16 SHEETS			

9:03:42 AM 2/3/2010 CR 164
S:\AE\B\Bluep\107252\5-dsgn\51-cadd\Cr 164\bridge\bbrcr164.bsl.dgn

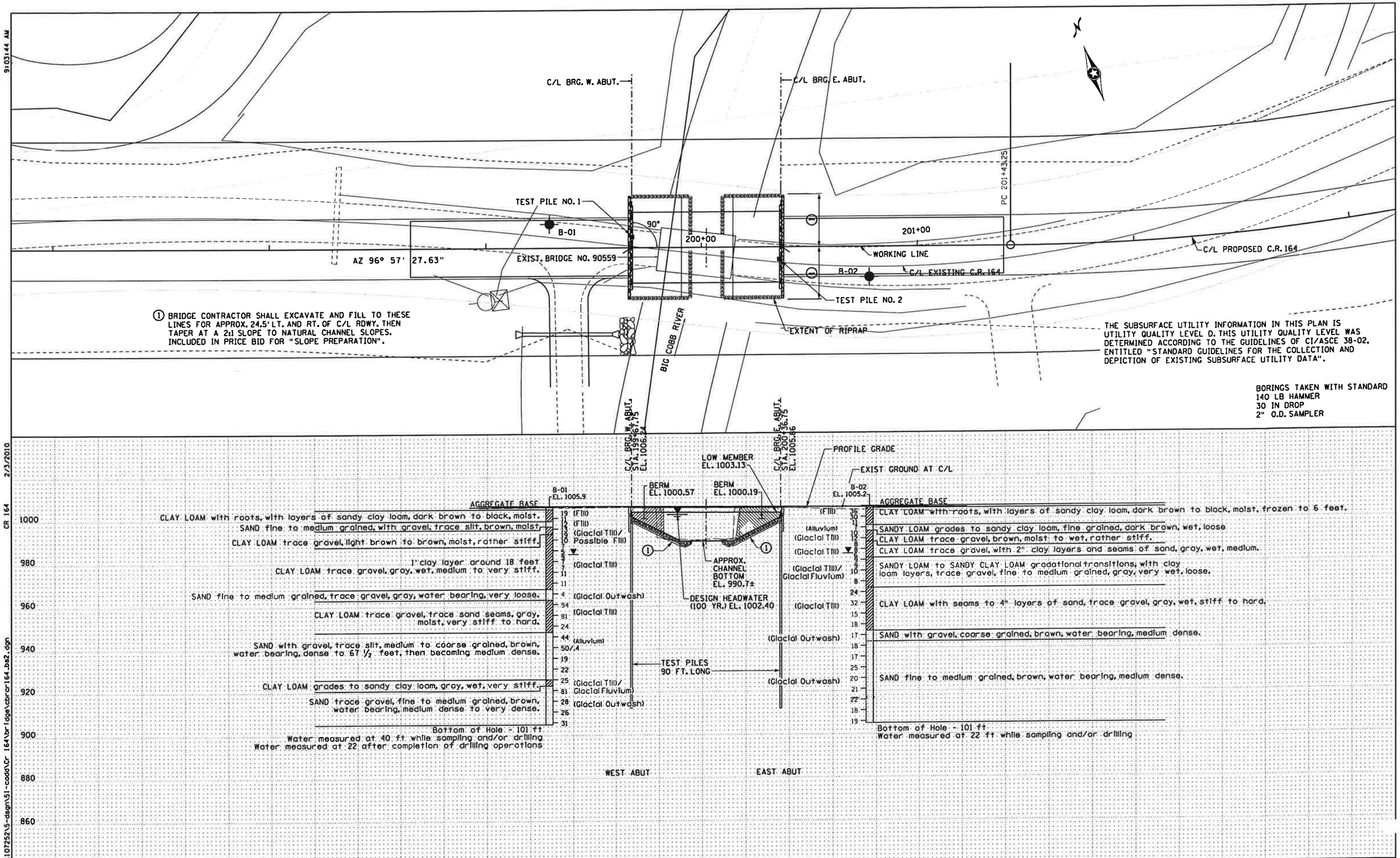

9:03:44 AM
2/3/2010
CR 164
S:\AE\B\Bluep\107252\5-dsgn\51-cadd\Cr 164\bridge\cbrcr164_bs2.dgn

SEH
3535 VADNAIS CENTER DRIVE
ST PAUL, MN 55110
PHONE (651) 490-2000
FAX (651) 490-2150

I hereby certify that this plan, specification, or report was prepared by me or under my direct supervision and that I am a duly Licensed Professional Engineer under the laws of the state of Minnesota

Signature: _____ Date: 2-3-2010

Printed Name: JEFFREY A JOHNSON Reg. No. 17280

TITLE: BRIDGE SURVEY PLAN AND PROFILE

SAP NO 07-598-27

DES: MAW	DR: MAW	APPROVED:
CHK: JAJ	CHK: JAJ	

SHEET NO B16 OF B16 SHEETS

BRIDGE NO 07593