MINNESOTA DEPARTMENT OF TRANSPORTATION
BLUE EARTH COUNTY DEPARTMENT OF PUBLIC WORKS

CONSTRUCTION PLANS FOR MADISON LAKE OUTLET

ON LEYRAY TWP RD No. T-295 ABOUT 3/4 MILE EAST OF TH 60
ABOUT 1 MILE SOUTH OF THE TOWN OF MADISON LAKE
IN THE NORTHEAST QUARTER OF SEC. 10-108-25

GROSS LENGTH	700.00	FEET	0.133	MILES
BRIDGE-LENGTH		FEET		MILES
NET LENGTH	700.00	FEET	0.133	MILES

END SAP 07-599-54
STA 13+00

OLD BRIDGE No. R0593
NEW BRIDGE No. 07J22

BEGIN SAP 07-599-54
STA 6+00

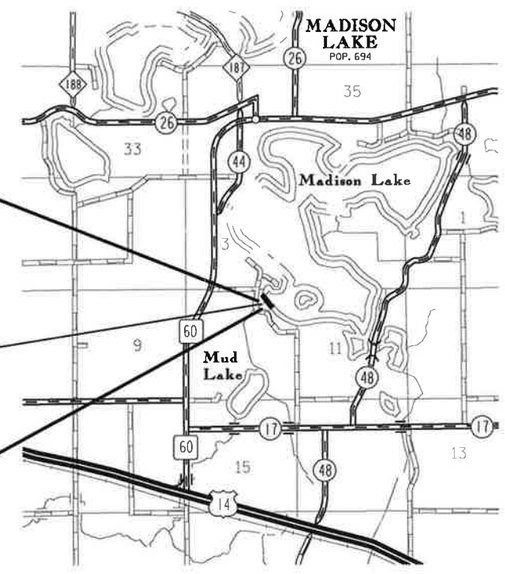

N

PROJECT LOCATION

BLUE EARTH COUNTY

DESIGN DESIGNATION

ADT (CURRENT YEAR) 2011 = 40
ADT (FUTURE YEAR) 2031 =
T (HEAVY COMMERCIAL)
5 TON DESIGN
R VALUE
SIGMA N 18
SOIL FACTOR 130

DESIGN SPEED MPH 30
BASED ON STOPPING SIGHT DISTANCE
HEIGHT OF EYE 3.5' - HEIGHT OF OBJECT 2.0'
DESIGN SPEED NOT ACHIEVED AT :
STA. TO STA. MPH
STA. TO STA. MPH

GOVERNING SPECIFICATIONS

THE 2005 EDITION OF THE MINNESOTA DEPARTMENT OF TRANSPORTATION "STANDARD SPECIFICATIONS FOR CONSTRUCTION" SHALL GOVERN.

INDEX OF SHEETS

SHEET No'S	1	TITLE
SHEET No'S	2	EST. QUANTITIES
SHEET No'S	3	TYPICAL SECTIONS
SHEET No'S	4	QUANTITES
SHEET No'S	5	TEMP. EROSION CONTROL DETAILS
SHEET No'S	6-7	TEMP. SEDIMENT CONTROL DETAILS
SHEET No'S	8	PERMANENT EROSION CONTROL DETAILS
SHEET No'S	9	PLAN PROFILE
SHEET No'S	10	X-SECTIONS
SHEET No'S	B1-B5	BRIDGE SHEETS

THIS PLAN CONTAINS 15 SHEETS

SCALE

PLAN	100'	
PROFILE	100' HORIZ.	10' VERT.
INDEX MAP	1 MILE	
CROSS SECTIONS	10' HORIZ.	10' VERT.

THE SUBSURFACE UTILITY INFORMATION IN THIS PLAN IS UTILITY LEVEL D. THIS QUALITY LEVEL WAS DETERMINED ACCORDING TO THE GUIDELINES OF CI/ASCE 38-02. ENTITLED "STANDARD GUIDELINES FOR THE COLLECTION AND DEPICTION OF EXISTING SUBSURFACE UTILITY DATA."

UTILITIES

ONE CALL:	1-800-252-1166
ELECTRIC: BENCO	1-507-387-7963
TELEPHONE: HICKORY TECH	1-507-387-1730

ALL APPLICABLE FEDERAL, STATE AND LOCAL LAWS AND ORDINANCES WILL BE COMPLIED WITH , IN THE CONSTRUCTION OF THIS PROJECT.

I HEREBY CERTIFY THAT THIS PLAN, SPECIFICATION, OR REPORT WAS PREPARED BY ME OR UNDER MY DIRECT SUPERVISION AND THAT I AM DULY LICENSED PROFESSIONAL ENGINEER UNDER THE LAWS OF THE STATE OF MINNESOTA

COUNTY ENGINEER — ALAN FORSBERG

DATE 04 May 11 — LICENSE No. 14720

DIST. STATE AID ENG'R : REVIEWED FOR COMPLIANCE WITH STATE-AID RULES/POLICY — DATE: 6/22/11

for STATE AID ENG'R : APPROVED FOR STATE-AID FUNDING — DATE: 6/22/11

TWP RD 337 SAP. 07-599-54 SHEET No. 1 OF 10 SHEETS

.../leray/Mad Lk Outlet/TITLE.dgn 5/4/2011 9:04:50 AM

THE FOLLOWING STANDARD PLATES, APPROVED BY THE FEDERAL HIGHWAY ADMINISTRATION, SHALL APPLY ON THIS PROJECT.

STANDARD PLATES

PLATE NO.	DESCRIPTION
3040 F	CORRUGATED METAL PIPE CULVERT
3123 J	METAL APRON FOR C.S. PIPE
3124 B	METAL APRON CONNECTION
3221 C	CORRUGATED STEEL PIPE COUPLING BAND
8000 I	STANDARD BARRICADES

STATEMENT OF ESTIMATED QUANTITIES

PAGE	ITEM No.	ITEM	UNIT	TOTAL EST. QUANTITY	TOTAL FINAL QUANTITY
4	2101.502	CLEARING	TREE	5	
4	2101.507	GRUBBING	TREE	5	
4	2104.501	REMOVE PIPE CULVERT	LIN. FT.	78	
4	2105.501	COMMON EXCAVATION	C. Y.	(P) 744	
4	2118.501	AGGREGATE SURFACING CL-1 (M)	TON	570	
4	2501.511	24" C.S. PIPE CULVERT	LIN. FT.	98	
4	2501.515	24" GS PIPE APRON	EACH	2	
5	2573.502	SILT FENCE, TYPE MACHINE SLICED	LIN. FT.	510	
5	2573.505	FLOTATION SILT CURTAIN TYPE STILL WATER	LIN. FT.	75	
5	2573.512	TEMPORARY DITCH CHECK, TYPE 2	LIN. FT.	150	
5	2573.540	FILTER LOG, TYPE STRAW BIOROLL	LIN. FT.	200	
	2573.550	EROSION CONTROL SUPERVISOR	L.S.	1	
5	2575.523	EROSION CONTROL BLANKETS, CATEGORY 4	SQ. YD.	510	
8	2575.555	TURF ESTABLISHIMENT	L.S.	1	
5	2575.560	HYDROLIC SOIL STABILIZER TYPE 5	LBS.	1,050	

TYPICAL GRADING SECTIONS

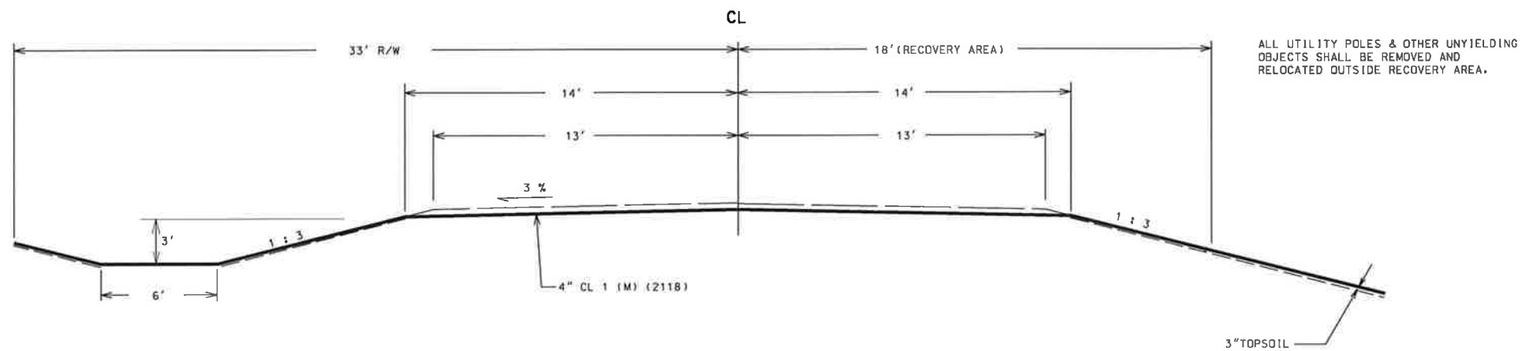

ALL UTILITY POLES & OTHER UNYIELDING OBJECTS SHALL BE REMOVED AND RELOCATED OUTSIDE RECOVERY AREA.

SUPER ELEVATED SECTION

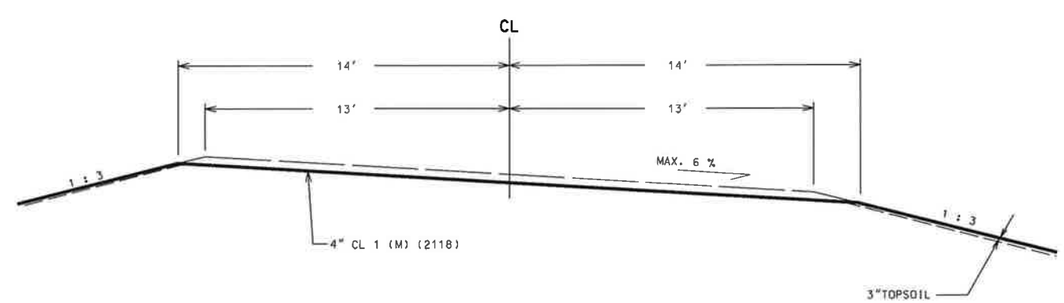

CONSTRUCTION NOTES:

3" OF TOPSOIL WILL BE REQUIRED ON ALL DISTURBED AREAS EXCEPT DITCH BOTTOMS. QUANTITIES WILL BE INCIDENTAL TO COMMON EXC. MATERIAL FROM THE TOP 1.0' OF THE NATURAL TOPSOIL SHALL NOT BE USED IN THE UPPER 2.0' OF THE ROADTOP SUBGRADE.

SALVAGED AGGREGATE SHALL BE STOCKPILED & REPLACED ON SUBGRADE TO ALLOW ACCESS FOR LOCAL RESIDENTS. PAID FOR AS COMMON EXCAVATION.

CERTIFIED BY Alan Forsberg PROFESSIONAL ENGINEER REG. NO. 14720 APR. 14, 2011

LERAY TWP RD 337 SAP 07-599-54 SHEET 3 OF 10 SHEETS

AGGREGATE QUANTITIES

LOCATION	LENGTH FEET	AVER WIDTH FEET	DEPTH INCHES	AGGR. SURFACE CL 1 TON
STA 6 + 0 TO STA 13 + 0	700	33	4	540
2 FIELD ENTRANCES @ 15 TONS				30
		TOTAL		570

* CALCULATED AT 140 LBS. COMPACTED DRY PER CU. FT.

CLEAR & GRUB

LOCATION	LOC	CLEAR TREE	GRUB TREE
STA 10 + 0	RT	1	1
STA 10 + 0	LT	4	4
		5	5

2501 DRAINAGE

LOCATION	LOC	REMOVE PIPE L.F.	24" CS PIPE L.F.	24" CS APRONS EACH
STA 9 + 75	LT	46	52	1
STA 10 + 40	LT	32	46	1
		78	98	2

EARTH WORK QUANTITIES

STA	Common Exc Cu.Yds.	Emb Cu.Yds.
6+00.00	0	0
6+50.00	48	11
7+00.00	92	13
8+00.00	120	137
9+00.00	89	133
9+50.00	63	13
9+96.15	45	142
10+04.72	5	52
10+50.00	34	163
11+00.00	56	31
12+00.00	129	43
13+00.00	63	18
TOTALS	744	756

	COMMON C.Y.	BORROW C.Y.	Emb C.Y.	
TWP RD	744		756	
BEDDING & BACKFILL			-225	
BORROW		0		
	744	**0**	531	TOTALS

Balance= 1.40 %

QUANTITIES

P:\TWP\leray\Mad Lk Outlet\[Tabulations.xls]A

CERTIFIED BY Alan Forsberg

REG. NO. 14720 APRIL 14, 2011

SAP 07-599-54 **SHEET 4 OF 10 SHEETS**

EROSION CONTROL

STATION TO STATION (1)	LOCATION (1)	REMARKS	SILT FENCE MACH. SLICED	FLOATATION SILT CURTAIN TYPE STILL WATER	DITCH CHECK TYPE 2	BIOLOG	CAT. 4 EROSION CONTROL BLANKET	HYDROLIC SOIL STABILEZER TYPE 5 EST. @ 2100# / ACRE
			LIN. FT	LIN. FT	LIN. FT.	LIN. FT	SQ. YD.	LBS
			(3)			(3)		
6 + 50 TO 9 + 75	RT		325					
10 + 15 TO 12 + 0	LT		185					
6 + 50 TO 9 + 70	RT	10' WIDE					355	
10 + 60 TO 12 0	LT	10' WIDE					155	
9 + 70 TO 10 + 30	RT			75				
6 + 50 TO 12 + 0	LT				150			
10 + 0	RT & LT	ESTIMATED CULVERT ENDS				200		
TEMPORARY EROSION CONTROL		ESTIMATED 1/2 ACRE						1050
		TOTALS	510	75	150	200	510	1,050

(1) STATION AND LOCATIONS ARE TO BE USED AS A GUIDE
VERIFY QUANTITIES & LOCATIONS IN THE FIELD.

(2) BASIS OF PAYMENT SPECIFIED IN SPEC. 1903 SHALL BE MODIFIED FOR EROSION CONTROL ITEMS TO PRECLUDE ANY PRICE ADJUSTMENT FOR INCREASED OR DECREASED QUANTITIES.

(3) SILT BARRIERS TYPE CHOSEN TO BEST FIT FIELD CONDITIONS. FOR BIDDING PURPOSES QUANTITIES ARE ESTIMATED

SUMMARY OF IMPERVIOUS & PERVIOUS
(NPDES PERMIT)

	Disturbed area	Before Construction (Impervious)	Before Construction Pervious	After Construction (Impervious)	After Construction Pervious
total sq ft	36,745	14,300	22,445	14,300	22,445
Acres	**0.8**	**0.3**	**0.5**	**0.3**	**0.5**

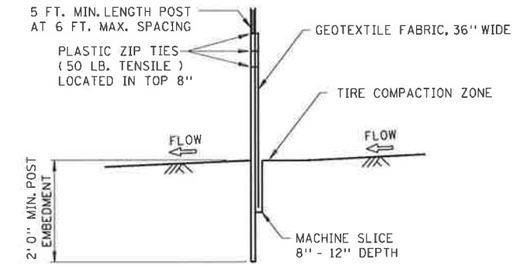

SILT FENCE, MACHINE SLICED
DESIGN GUIDELINES:
TO PROTECT AREAS FROM SHEET FLOW.
MAXIMUM CONTRIBUTING AREA: 1 ACRE.

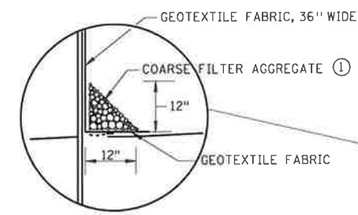

OPTIONAL METHOD
FOR SILT FENCE, HEAVY DUTY

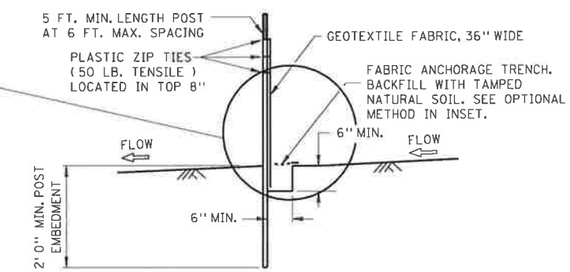

SILT FENCE, HEAVY DUTY
(HAND INSTALLED)
DESIGN GUIDELINES:
TO PROTECT AREAS FROM SHEET FLOW.
MAXIMUM CONTRIBUTING AREA: 1 ACRE.

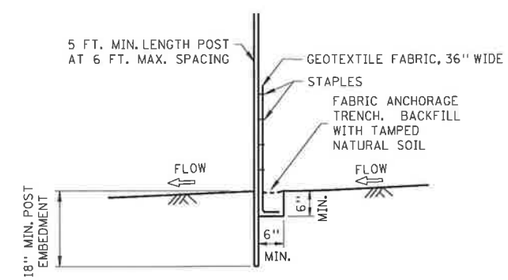

SILT FENCE, PREASSEMBLED
DESIGN GUIDELINES:
TO PROTECT AREAS FROM SHEET FLOW.
MAXIMUM CONTRIBUTING AREA: 1 ACRE.

NOTES:
SEE SPECS. 2573, 3149 & 3886.
(1) COARSE FILTER AGGREGATE (SPEC. 3149) SHALL BE INCIDENTAL.

TEMPORARY EROSION CONTROL

CERTIFIED BY Alan Forsberg ALAN FORSBERG REG. NO. 14720 PROFESSIONAL ENGINEER APRIL 14, 2011

LERAY TWP SAP 07-599-54 SHEET 5 OF 10 SHEETS

.../Erosion-Detail1.dgn 4/14/2011 8:56:34 AM

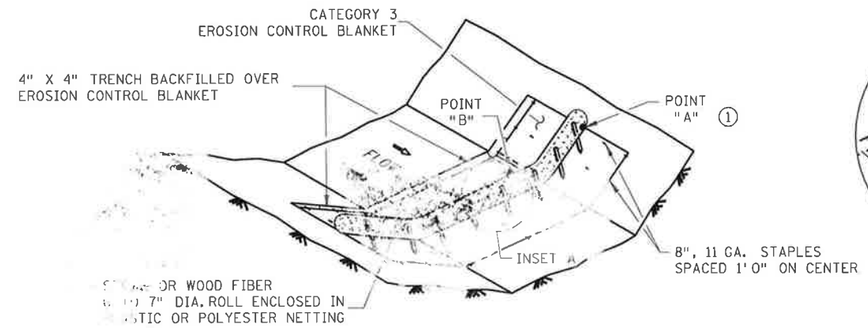

TYPE 3: BIOROLL BLANKET SYSTEM DITCH CHECK

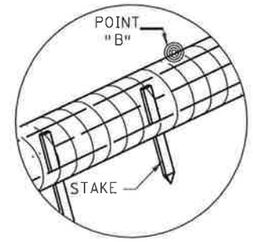

INSET A

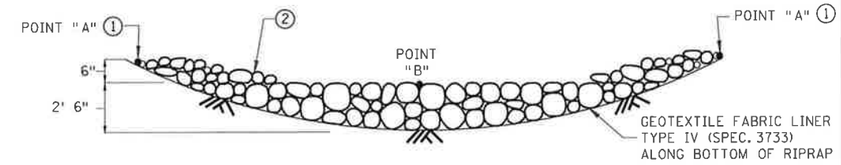

CROSS SECTION (ROCK WEEPER AND ROCK CHECK)

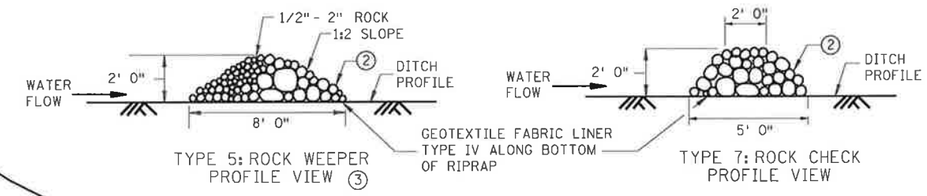

TYPE 5: ROCK WEEPER
PROFILE VIEW ③

TYPE 7: ROCK CHECK
PROFILE VIEW

TYPE 5: ROCK WEEPER AND
TYPE 7: ROCK CHECK DITCH CHECKS ④

USE ON ROUGH GRADED AREAS

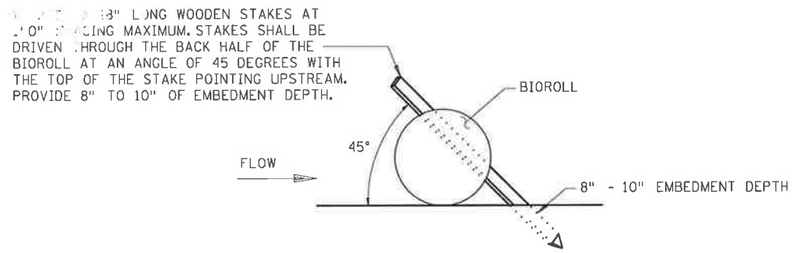

BIOROLL STAKING DETAIL

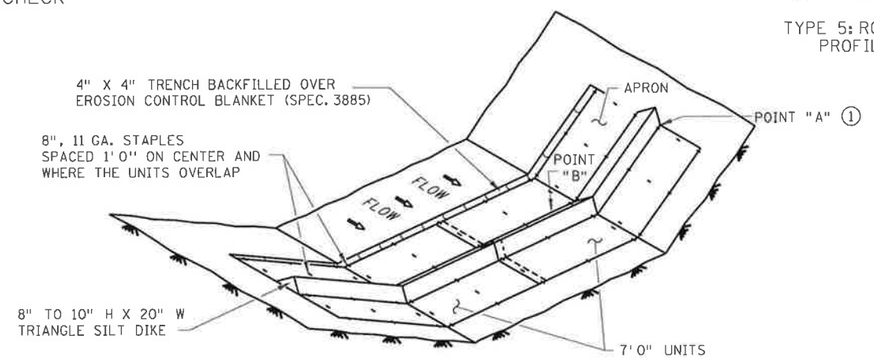

TYPE 6: GEOTEXTILE TRIANGULAR DIKE DITCH CHECK

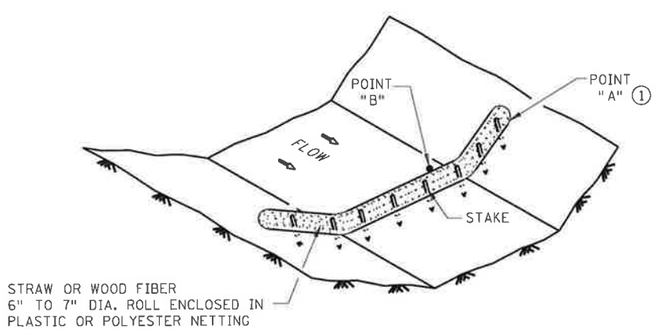

TYPE 2: BIOROLL DITCH CHECK

USE ON ROUGH GRADED AREAS

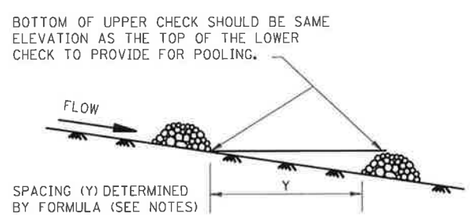

DITCH CHECK SPACING ④

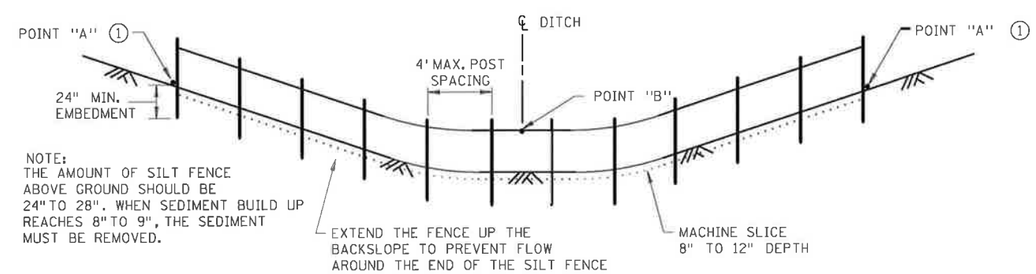

TYPE 1: SLICED IN SILT FENCE DITCH CHECK

NOTES:

SEE SPECS. 2573, 3601, 3733, 3885, 3886 & 3889.

APPROXIMATE SPACING BETWEEN EACH DITCH CHECK SHOULD BE DETERMINED FROM THE FOLLOWING SPACING FORMULA:

$$\text{APPROXIMATE SPACING OF DITCH CHECKS (FT.)} = Y = \frac{\text{DITCH CHECK HEIGHT (FT)}}{\text{\% CHANNEL SLOPE}} \times 100$$

① POINT "A" MUST BE A MINIMUM OF 6 INCHES HIGHER THAN POINT "B" TO ENSURE THAT WATER FLOWS OVER THE DIKE AND NOT AROUND THE ENDS.

② CLASS I - IV RIPRAP (SPEC. 3601) WITH GEOTEXTILE FABRIC LINER, TYPE IV (SPEC. 3733).

③ THE ROCK WEEPER FILTERS SEDIMENT OUT OF THE WATER BETTER THAN THE OTHER DITCH CHECKS. THE ROCK WEEPER COULD BE USED AS A PERMANENT WATER FILTERING FEATURE.

④ PERMANENT ROCK DITCH CHECKS PLACED WITHIN THE CLEAR ZONE WILL NEED TO BE 18" OR LESS IN HEIGHT. A 1:6 APPROACH AND DEPARTURE SLOPE SHALL BE PROVIDED.

GENERAL DESIGN GUIDELINES

DITCH CHECK TYPE	SILT FENCE	BIOROLL	BIOROLL BLANKET	TRIANGULAR DIKE	ROCK WEEPER	ROCK CHECK
STORM FREQUENCY:	2 YR. - 24 HR.	2 YR. - 24 HR.	2 YR. - 24 HR.	2 YR. - 24 HR.	5 YR. - 24 HR.	5 YR. - 24 HR.
MAX. FLOW VELOCITY:	< 1 FT./SECOND	1.5 FT./SECOND	4.5 FT./SECOND	1.5 FT./SECOND	12 FT./SECOND	12 FT./SECOND
MAX. DITCH GRADE:	0% - 0.5%	1.5% - 3%	1.5% - 3%	1.5% - 2.0%	3% - 5%	3% - 5%
MAX. DRAINAGE AREA:	1 ACRE	2 ACRE	2 ACRE	4 ACRE	4+ ACRE	4+ ACRE

STANDARD SHEET NO.
5-297.405 (3 OF 4)
STANDARD APPROVED:
SEPTEMBER 27, 2006

TEMPORARY SEDIMENT CONTROL
DITCH CHECK/BARRIER

STATE PROJ. NO. SAP 07-599-54 SHEET NO. 6 OF 10 SHEETS

.../Erosion-Detail2.dgn 4/14/2011 8:57:16 AM

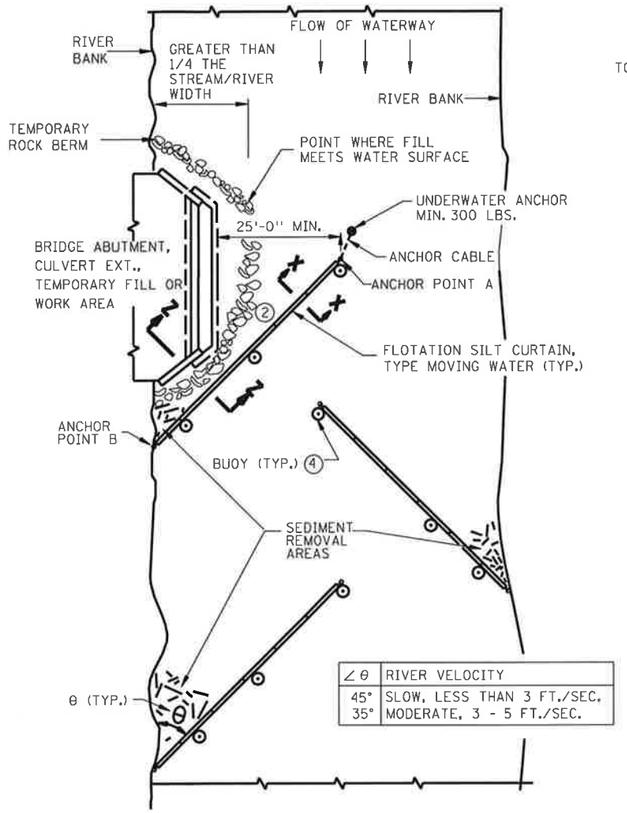

∠θ	RIVER VELOCITY
45°	SLOW, LESS THAN 3 FT./SEC.
35°	MODERATE, 3 - 5 FT./SEC.

PLAN VIEW (TYPE: MOVING WATER)

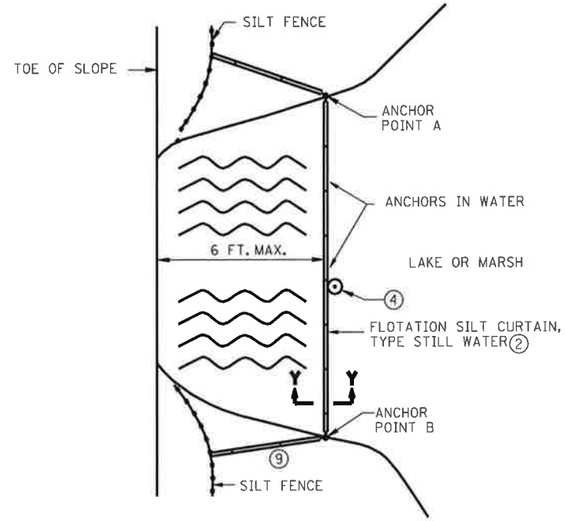

PLAN VIEW (TYPE: STILL WATER)

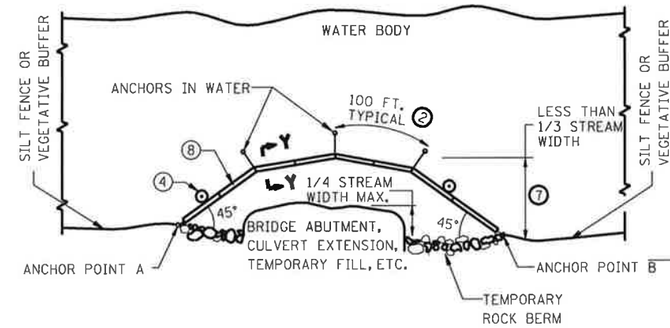

PLAN VIEW (TYPE: WORK AREA)

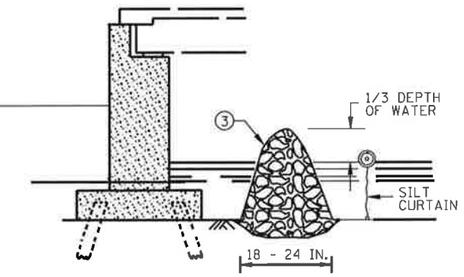

SECTION Z-Z TEMPORARY ROCK BERM
FOR SEDIMENT CONTROL

DESIGN GUIDELINES: MOVING WATER

WHEN TEMPORARY FILL ENCROACHES MORE THAN 1/4 BUT LESS THAN 1/3 WIDTH OF THE STREAM.
MINIMUM WATER DEPTH: 3 FT.
MAXIMUM WATER DEPTH: 11 FT.
MAXIMUM WATER VELOCITY: 5 FT./SEC.
1 6

DESIGN GUIDELINES: WORK AREA

WHEN TEMPORARY FILL ENCROACHES LESS THAN 1/4 OF THE WIDTH OF STREAM.
MAXIMUM WATER DEPTH: 10 FT.
MAXIMUM WATER VELOCITY: 5 FT./SEC.

DESIGN GUIDELINES: STILL WATER 6

MINIMUM WATER DEPTH: 0 FT.
MAXIMUM WATER DEPTH: 10 FT.

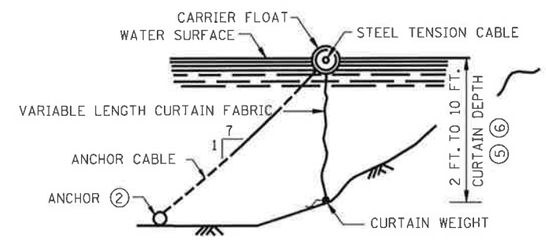

SECTION Y-Y

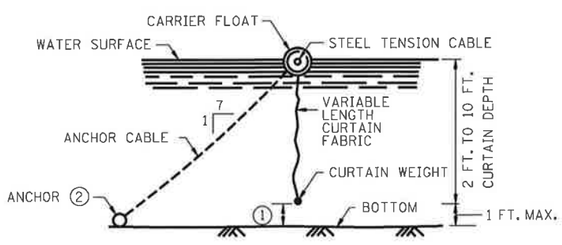

SECTION X-X

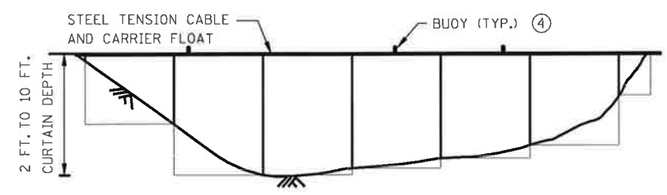

FLOTATION SILT CURTAIN - TYPE: WORK AREA AND STILL WATER 5

FOR CONTAINING OVERFLOWS FROM WEIRS, STANDPIPES, SETTLING PONDS

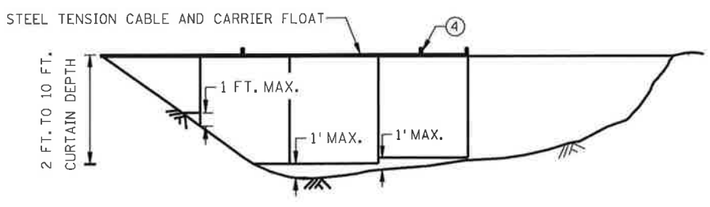

FLOTATION SILT CURTAIN - TYPE: MOVING WATER 5

USE FOR SMALLER RIVERS WITH SLOW AND MODERATE VELOCITIES

NOTES:

SEE SPECS. 2573 & 3887.

1. CURTAIN EXTENDS TO 1 FT. MAXIMUM FROM BOTTOM OF WATER BODY.
2. FOR ANCHOR AND WEIGHT REQUIREMENTS, SEE SPEC. 2573.
3. IN AREAS WHERE THE PLAN CALLS FOR RIPRAP AT THE BRIDGE, A TEMPORARY ROCK BERM WILL BE USED TO PROVIDE ADDITIONAL PROTECTION. THE TEMPORARY ROCK BERM IS INCIDENTAL FOR WHICH NO DIRECT PAYMENT WILL BE MADE.
4. ON U.S. COAST GUARD OR OTHER MOTORIZED WATERWAYS, BUOYS ARE REQUIRED TO MARK THE ENDS AND SPECIAL AREAS FOR VISIBILITY. PLACE BUOYS AS REQUIRED FOR NAVIGATIONAL PURPOSES.
5. WATER DEPTH CAN BE 0 TO 10 FEET, 0 TO 11 FEET FOR TYPE MOVING WATER.
6. SILT CURTAIN HEIGHT INCLUDES MAXIMUM WAVE HEIGHT FOR WATER BODY.
7. KEEP AS CLOSE TO WORK AREA AS POSSIBLE.
8. SILT CURTAIN, ROCK BERM OR SHEET PILE AS REQUIRED TO CONTROL THE INFILTRATION OF SILT.
9. IF 6 INCHES OR LESS OF WATER, USE BALE BARRIERS, SEE SHEET 2.

STANDARD SHEET NO.	TITLE:
5-297.405 (1 OF 4)	TEMPORARY SEDIMENT CONTROL SILT CURTAIN
STANDARD APPROVED: SEPTEMBER 27, 2006	

SAP 07-599-54 **LERAY TWP** **SHEET NO. 7 OF 10 SHEETS**

LEGEND

- DRAINAGE ARROW
- TYPE 2 DITCH CHECK
- TEMPORARY ROCK BERM
- SILT BARRIERS
- TYPE 4 EROSION CONTROL BLANKET
- RIP RAP CL 3
- TURF EST. LUMP SUM APPROX. 0.5 ACRES
- FLOATATION CURTAIN

Incidental to the Riprap required to stabilize the culvert ends. Riprap shall be temporarily deployed for perimeter erosion control as shown as temporary rock berm in the silt curtain detail sheet.

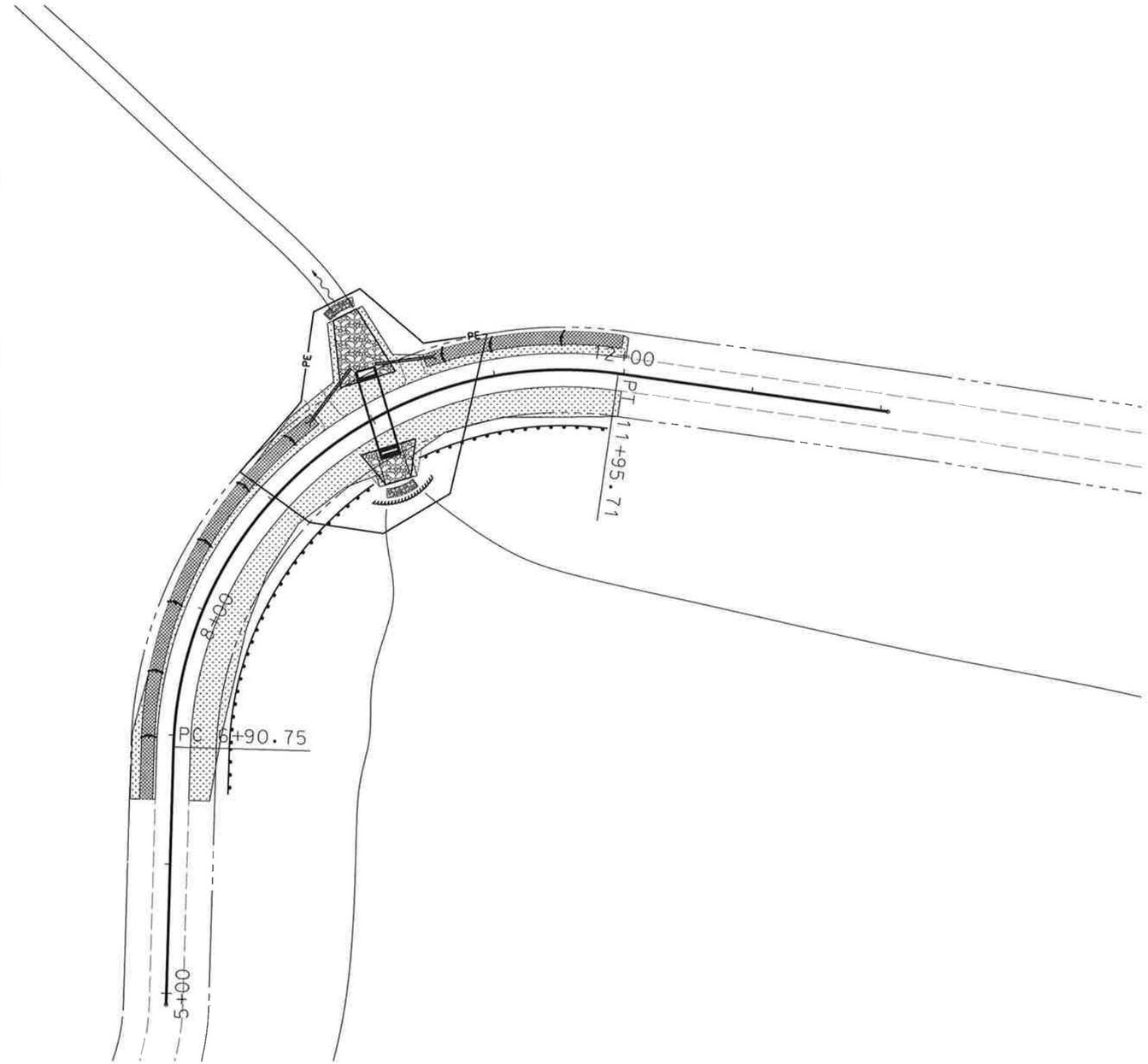

EROSION CONTROL & TURF ESTABLISHMENT

CERTIFIED BY Alan Forsberg LIC. NO. 14720 PROFESSIONAL ENGINEER APRIL 14, 2011

LERAY TWP SAP 07-599-54 SHEET 8 OF 10 SHEETS

Turf Est.dgn 7/25/2011 11:53:14 AM

ALL UNDERGROUND UTILITIES
LOCATIONS ARE APPROXIMATE

ITEM	L1			C2	L3	
CONTROL POINT	BOP	PC	RADIUS	PI	PT	EOP
STATION	4+91.30	6+90.75	N/A	10+26.52	11+95.71	14+05.82
NORTHING	220749.467	220755.172	221055.049	220764.777	221097.212	221305.236
EASTING	618772.463	618573.092	618581.674	618237.462	618284.651	618314.180
DIRECTION	N 88°21'39" W				N 08°04'45" E	
DISTANCE	199.453				210.110	
DEFLECTION ANGLE				96°26'23"		
DELTA ANGLE			96°26'23"			
DEGREE OF CURVE - ARC			19°05'55"			
DEGREE OF CURVE - CHORD			19°11'17"			
CHORD DIRECTION			N40°08'27"W			
TANGENT			335.767			
RADIUS			300.000			
ARC LENGTH			504.958			

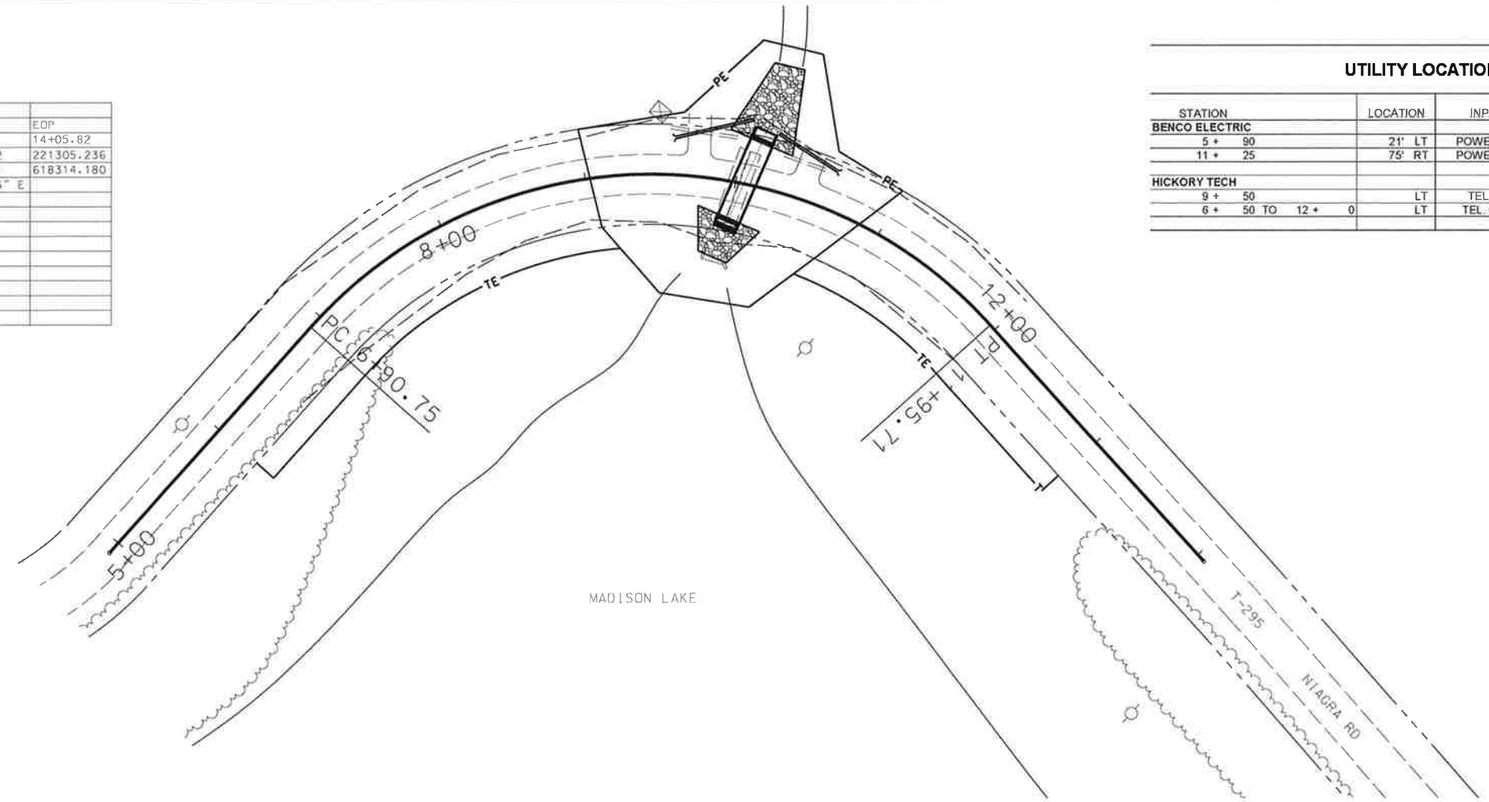

UTILITY LOCATIONS

STATION	LOCATION	INPLACE	REMARKS
BENCO ELECTRIC			
5 + 90	21' LT	POWER POLE	LEAVE INPLACE
11 + 25	75' RT	POWER POLE	LEAVE INPLACE
HICKORY TECH			
9 + 50	LT	TEL. PED.	CHECK IN FIELD
6 + 50 TO 12 + 0	LT	TEL. CABLE	RELOCATE

SCALE
0 100 200

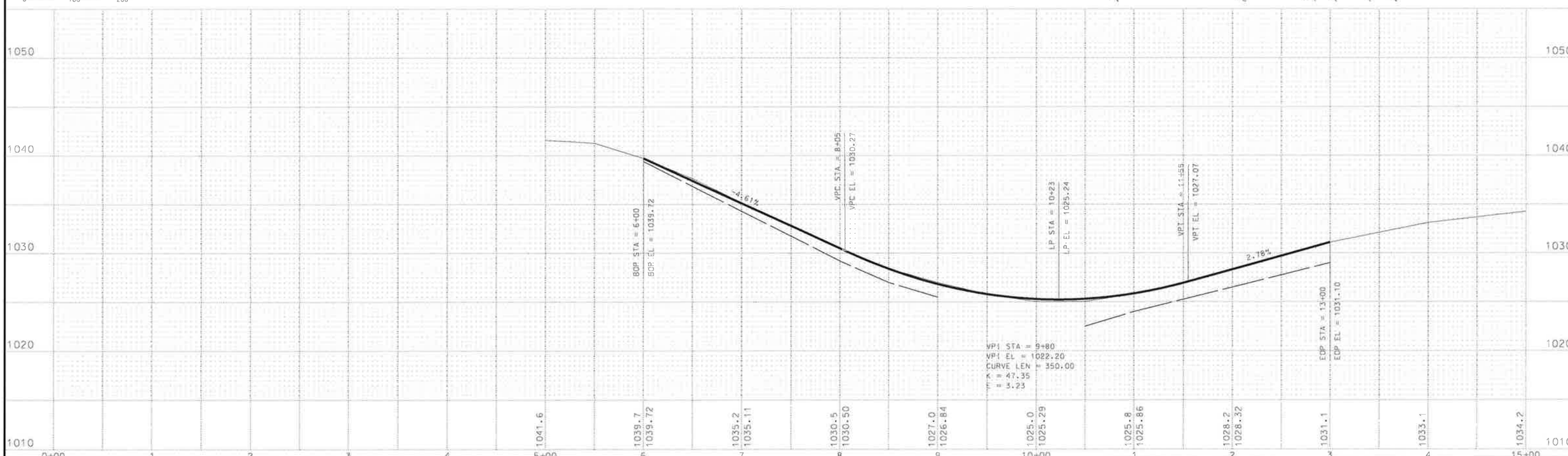

CERTIFIED BY Alan Forsberg PROFESSIONAL ENGINEER LIC. NO. 14720 APR. 14 2011

SAP 07-599-54 SHEET 9 OF 10 SHEETS

RCp01003.dgn 7/25/2011 11:34:49 AM

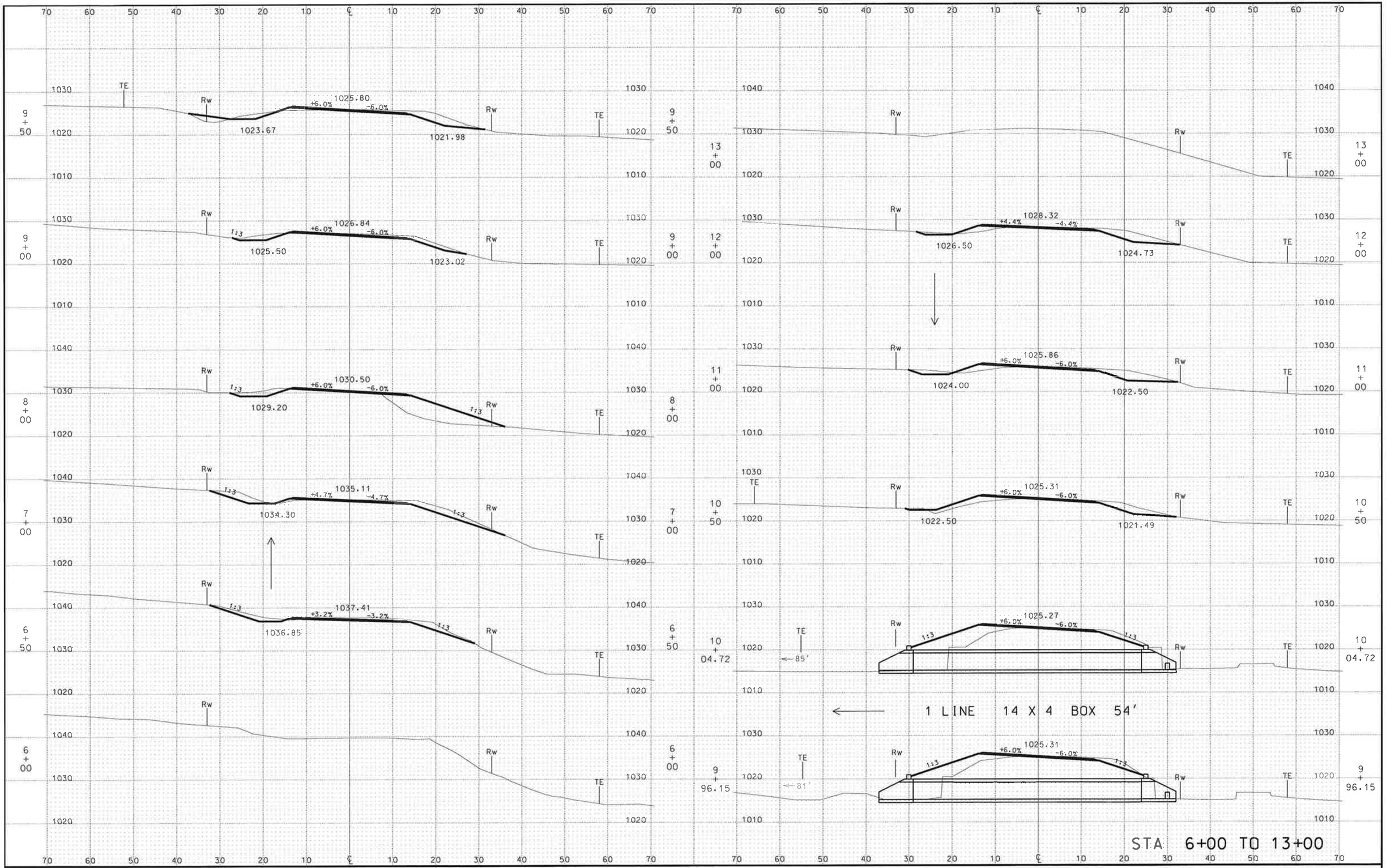

.../Mad Lk Outlet/rc001003.dgn 4/14/2011 9:25:02 AM

LIST OF STANDARD PLATES	
PLATE	DESCRIPTION
3133 C	RIPRAP AT R.C.P. OUTLET
3145 F	CONCRETE PIPE TIES
8000 I	STANDARD BARRICADES

THE ABOVE STANDARD PLATES AS APPROVED BY THE F.H.W.A. SHALL APPLY ON THIS PROJECT.

GOVERNING SPECIFICATIONS

THE 2005 EDITION OF THE MINNESOTA DEPARTMENT OF TRANSPORTATION "STANDARD SPECIFICATIONS FOR CONSTRUCTION" SHALL GOVERN.

CONSTRUCTION NOTES

RIPRAP CONSTRUCTION AT OUTLET SHALL BE AS SHOWN IN THE PLANS AND STANDARD PLATE 3133. RIPRAP CONSTRUCTION AT INLET SHALL BE AS SHOWN IN THE PLANS. EXACT PLACEMENT SHALL BE DETERMINED BY THE ENGINEER IN THE FIELD.

EXCAVATION MATERIAL MAY BE USED FOR BACKFILLING APRONS IF APPROVED BY ENGINEER IN THE FIELD.

GRANULAR FILTER MATERIAL OR GEOTEXTILE FABRIC (SEE SPECIAL PROVISIONS) WILL BE CONSIDERED INCIDENTAL TO RIPRAP CONSTRUCTION FOR WHICH NO DIRECT COMPENSATION WILL BE MADE. APPROXIMATE QUANTITY OF GRANULAR FILTER IS 38 C.Y.

THE SURVEY USED IN DEVELOPING THIS CULVERT PLAN MUST BE VERIFIED WITH THE ACTUAL STREAM LOCATION AT THE TIME OF CONSTRUCTION STAKING. IF THE CULVERT POSITION IS NOT COMPATIBLE WITH THE STREAM, THE ENGINEER SIGNING THESE PLANS SHALL BE NOTIFIED.

THE SUBSURFACE UTILITY INFORMATION IN THIS PLAN IS UTILITY QUALITY LEVEL D. THIS UTILITY QUALITY LEVEL WAS DETERMINED ACCORDING TO THE GUIDELINES OF CI/ASCE 38–02, ENTITLED "STANDARD GUIDELINES FOR THE COLLECTION AND DEPICTION OF EXISTING SUBSURFACE UTILITY DATA."

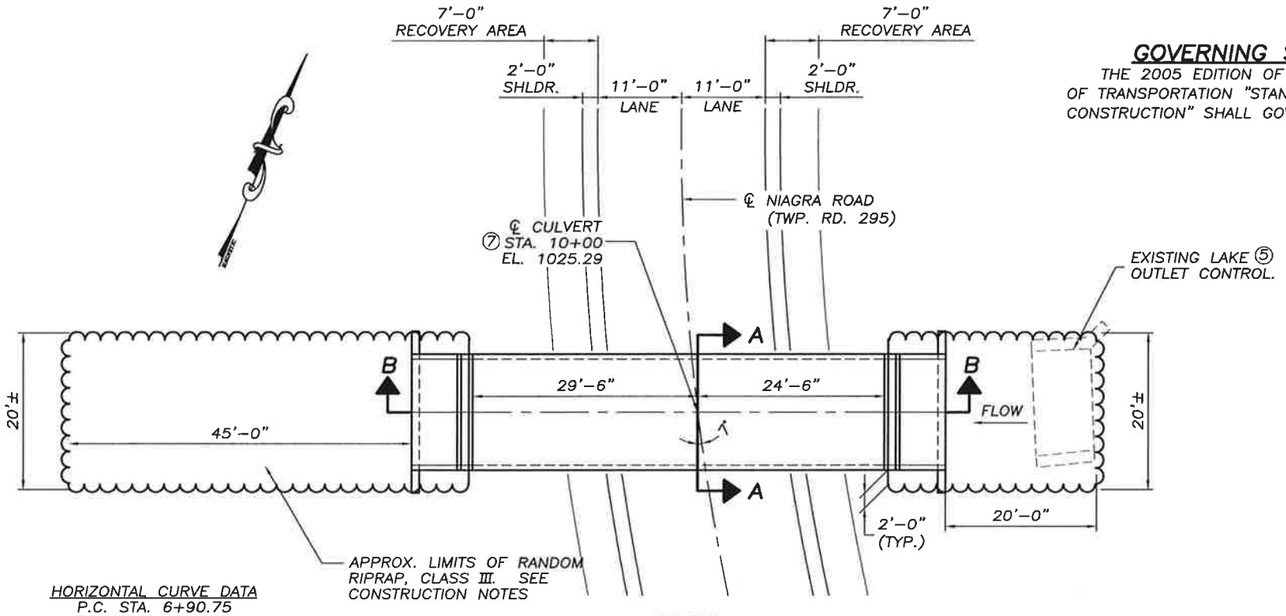

PLAN

SCALE: 0 5' 10'

HORIZONTAL CURVE DATA
P.C. STA. 6+90.75
P.I. STA. 10+26.52
P.T. STA. 11+95.71
T = 335.77'
R = 300.00'
L = 504.96'
Δ = 96°26'23" RT.

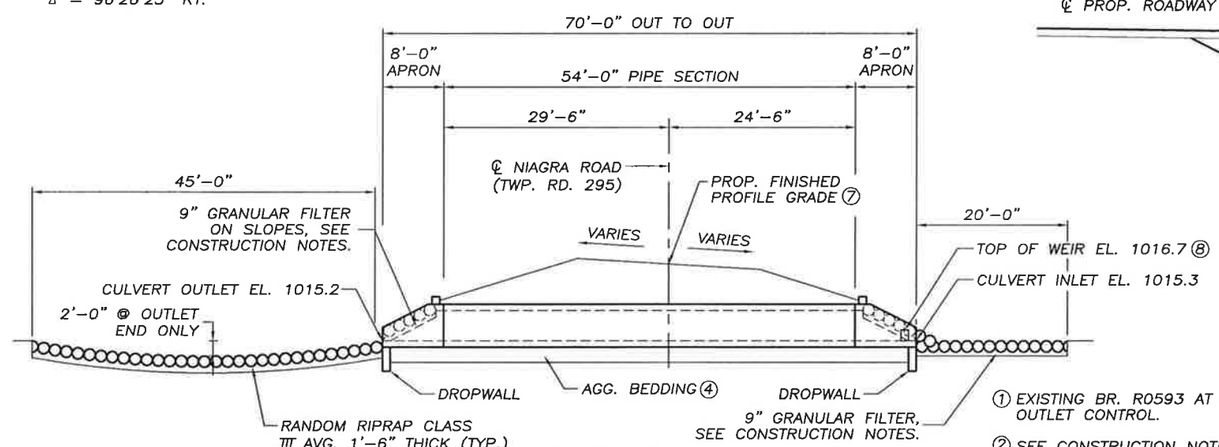

ELEVATION SECTION B–B

SCALE: 0 5' 10'

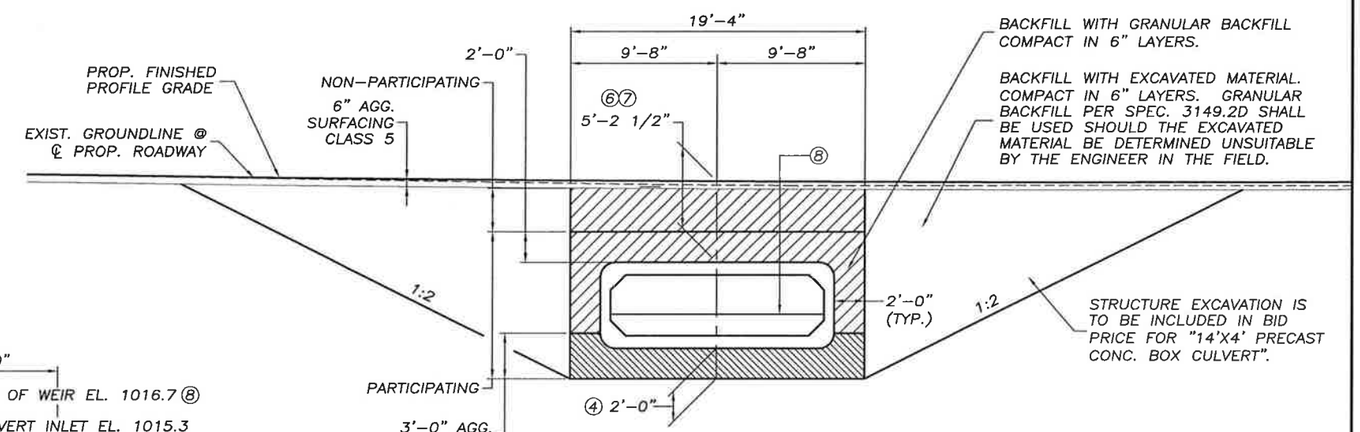

SECTION THRU CULVERT SECTION A–A

SCALE: 0 2' 5'

① EXISTING BR. R0593 AT STA. 10+00 &. EXISTING LAKE OUTLET CONTROL.

② SEE CONSTRUCTION NOTES.

③ STRUCTURE EXCAVATION & CONSTRUCTION OF WEIR SHALL BE INCLUDED IN PRICE BID FOR "14'x4' PRECAST CONCRETE BOX CULVERT".

④ EXCAVATE TO 2' BELOW BOTTOM OF STRUCTURE OR BOTTOM OF UNSUITABLE SOIL, WHICHEVER IS GREATER. BACKFILL WITH AGGREGATE BEDDING.

⑤ EXISTING LAKE OUTLET CONTROL TO BE REMOVED AS PART OF EXISTING BRIDGE REMOVAL.

⑥ NO VEHICLE TRAFFIC SHALL BE PERMITTED ABOVE CULVERT UNLESS CULVERT HAS AT LEAST 2'–0" OF FILL ABOVE THE TOP OF THE CULVERT.

⑦ PROPOSED FINISHED PROFILE GRADE ON GRADING PLANS (BY OTHERS) SHALL GOVERN IF ELEVATIONS VARY SLIGHTLY FROM THESE PLANS.

⑧ 1'–5" HIGH WEIR PLACED IN UPSTREAM APRON ONLY. SEE SHEETS B3 FOR DETAILS.

STATEMENT OF ESTIMATED QUANTITIES

	ITEM NO.	ITEM	UNIT	PARTICIPATING	NON–PARTICIPATING	TOTAL
③	2412.511	14' X 4' PRECAST CONC. BOX CULVERT	LIN. FT.	54		54
③	2412.512	14' X 4' P.C. CONC. BOX CULVERT END SECTION	EACH	2		2
①	2442.501	REMOVE EXISTING BRIDGE	LUMP SUM		1	1
	2451.503	GRANULAR BACKFILL (CV)	CU. YD.	116	74	190
④	2451.509	AGGREGATE BEDDING (CV)	CU. YD.	109		109
②	2511.501	RANDOM RIPRAP, CLASS III	CU. YD.	76		76

PLANS PREPARED BY:
ERICKSON ENGINEERING
9330 JAMES AVENUE SOUTH
BLOOMINGTON, MN 55431

I HEREBY CERTIFY THAT THIS PLAN WAS PREPARED BY ME OR UNDER MY DIRECT SUPERVISION AND THAT I AM A DULY LICENSED PROFESSIONAL ENGINEER UNDER THE LAWS OF THE STATE OF MINNESOTA.

Thomas J. Wilson THOMAS J. WILSON

DATE: 8-30-10 LIC. NO. 21690

APPROVED:

COUNTY ENGINEER
BLUE EARTH COUNTY

DATE: 18 Apr 11

NIAGRA RD. (TWP. RD. 295) BLUE EARTH COUNTY
MINNESOTA DEPARTMENT OF TRANSPORTATION

CULVERT NO. 07J22

LOCATED ON NIAGRA ROAD (TWP. RD. 295)
0.8 MILES EAST OF JCT. T.H. 60
AT MADISON LAKE OUTLET.

1–14'x4' PRECAST CONCRETE BOX CULVERT
26 FT. RDWY. ~ 7° SKEW
SPAN IDENTIFICATION NO. 113

GENERAL PLAN & ELEVATION

SEC. 10 TWP. 109 N R 25 W

TOWNSHIP: LE RAY
COUNTY: BLUE EARTH

S.A.P. 07–599–054
SHEET B1 OF B5 SHEETS

DES.: TJW	DRN.: SUK	07J22
CHK.: DSP	CHK.: DSP	

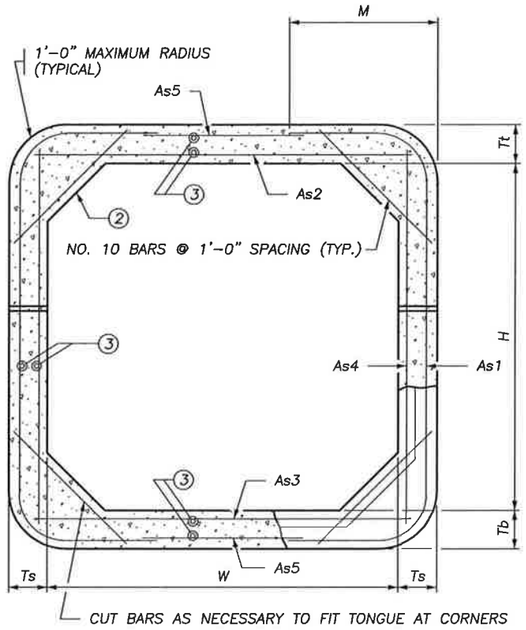

TRANSVERSE BARREL SECTION

BAR REINFORCEMENT OPTION SHOWN

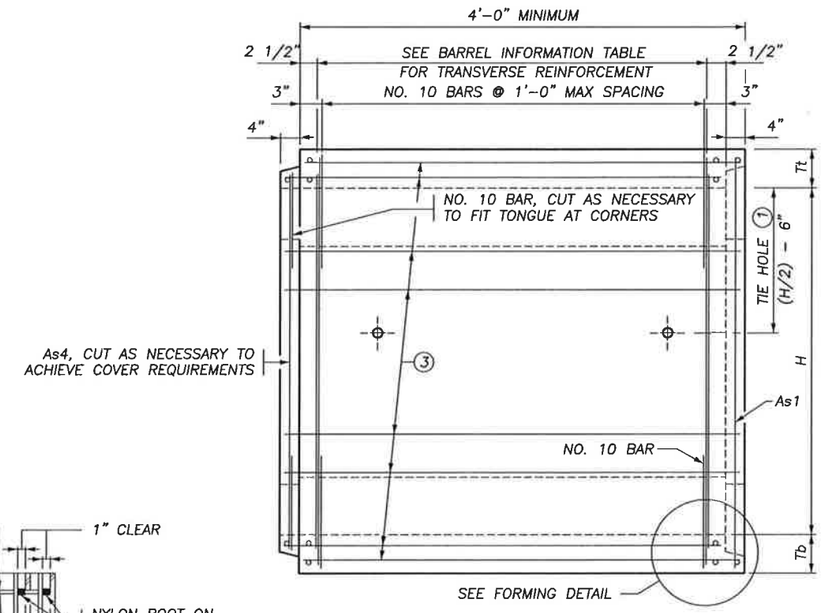

LONGITUDINAL BARREL SECTION

BAR REINFORCEMENT OPTION SHOWN

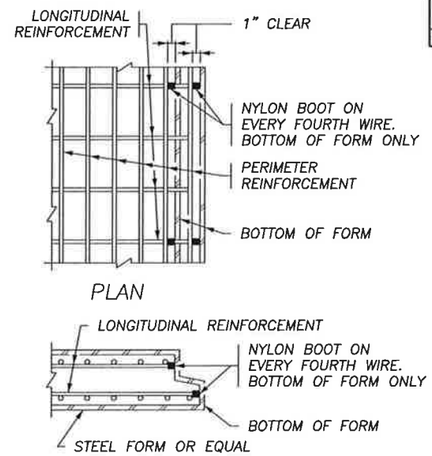

FORMING DETAIL

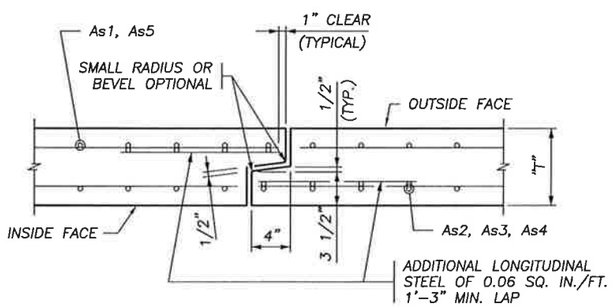

TONGUE AND GROOVE JOINT DETAIL

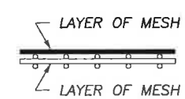

FABRIC LAYER DETAIL

WHEN MORE THAN ONE LAYER OF STEEL FABRIC IS USED TO OBTAIN THE REQUIRED REINFORCEMENT AREAS, THE WIRES OF THE STEEL FABRIC SHALL BE PLACED AS SHOWN

CONSTRUCTION NOTES

CULVERTS TO BE CONSTRUCTED AS PER Mn/DOT SPEC. 2412 EXCEPT AS NOTED.

FILL HEIGHTS OF LESS THAN 2'-0" REQUIRE A DISTRIBUTION SLAB. SEE FIG. 5-395.100(A) AND FIG. 5-395.100(B) FOR ADDITIONAL INFORMATION.

~~IF THE DISTANCE BETWEEN BARRELS IS LESS THAN 2' 6" USE EITHER PEA ROCK OR LEAN MIX BACKFILL (MnDOT SPEC. 2520) BETWEEN THE CULVERTS AS APPROVED BY THE ENGINEER. (ALSO, PROVIDE APPROVED GROUT SEEPAGE CORE, MINIMUM 12" THICK, BETWEEN THE CULVERT'S TWO ENDS.) MINIMUM DISTANCE REQUIRED IS 6".~~

THE STEEL FABRIC, SHEAR REINFORCEMENT AND REINFORCEMENT BARS SHALL CONFORM TO APPLICABLE REQUIREMENTS OF AASHTO M259.

1 1/2" MIN. AND 2" MAX. CONCRETE COVER ON ALL REINFORCEMENT, INCLUDING SHEAR REINFORCEMENT, EXCEPT FOR TONGUE AND GROOVE DETAIL.

ANY OF THE FOLLOWING COMBINATIONS OF STEEL REINFORCEMENT MAY BE USED:
(a) 1 OR 2 LAYERS OF MESH OR
(b) 1 LAYER OF MESH AND 1 LAYER OF REINFORCEMENT BARS OR
(c) 1 LAYER OF REINFORCEMENT BARS.
THE REINFORCEMENT SHALL BE DEVELOPED IN ACCORDANCE WITH AASHTO "STANDARD SPECIFICATIONS FOR HIGHWAY BRIDGES". IF BAR REINFORCEMENT IS SUBSTITUTED FOR WIRE MESH, THE AREAS OF REINFORCEMENT SHALL BE INCREASED BY 8%.

THE MAXIMUM SIZE OF REINFORCEMENT BARS SHALL BE NO. 19. THE MAXIMUM MESH SIZE SHALL BE 1/2" DIA. PER LAYER (MAXIMUM OF 2 LAYERS).

THE SPACING CENTER TO CENTER OF THE TRANSVERSE WIRES SHALL NOT BE LESS THAN 2" NOR MORE THAN 4". THE SPACING CENTER TO CENTER OF THE LONGITUDINAL WIRES SHALL NOT BE MORE THAN 8".

WELDING WILL NOT BE ALLOWED ON REINFORCEMENT BARS OR STEEL FABRIC, EXCEPT THAT THE ORIGINAL WELDING REQUIRED TO MANUFACTURE WIRE FABRIC IS ACCEPTABLE.

WHEN REINFORCEMENT IS CUT, ADDITIONAL REINFORCEMENT SHALL BE ADDED ON BOTH SIDES OF THE CUT MEMBER TO REPLACE OR EXCEED THE CUT STEEL.

CONCRETE SHALL BE MIX NO. 3W36 WITH NO CALCIUM CHLORIDE ALLOWED.

SHOP DRAWING APPROVAL PER Mn/DOT SPEC. 3238.2A IS NOT REQUIRED UNLESS OPENINGS OR ATTACHMENTS ARE PLACED ON A BARREL SEGMENT.

(1) CULVERT TIES ARE TO BE 1" DIAMETER RODS. SEE STANDARD PLATE NO. 3145 FOR CONNECTION DETAILS.

(2) HAUNCH SIZE AS FOLLOWS:
~~6' 0" AND 8' 0" WIDTHS — 6" TO 12"~~
~~10' 0" WIDTH — 10" TO 12"~~
12'-0" AND 14'-0" WIDTHS – 12"

(3) MINIMUM LONGITUDINAL STEEL SHALL BE 0.06 SQ. IN. / FT.

BARREL INFORMATION

LOCATION	SIZE	CLASS	f'c (P.S.I.)	FILL HEIGHT RANGE (FT.)	DIMENSIONS W (FT.)	H (FT.)	Tt (IN.)	Tb (IN.)	Ts (IN.)	WEIGHT (LBS./FT.)	STEEL FABRIC REINFORCEMENT As1 AREA (IN.²/FT.)	As1 LENGTH (FT.)	As1 M (FT.)	As2 AREA (IN.²/FT.)	As2 LENGTH (FT.)	As3 AREA (IN.²/FT.)	As3 LENGTH (FT.)	As4 AREA (IN.²/FT.)	As4 LENGTH (FT.)	As5 AREA (IN.²/FT.)	As5 LENGTH (FT.)
10+00	14X4	2	5000	2–6	14'	4'	10	10	8	4800	0.83	12'-9"	4'-2"	1.03	14'-6"	0.93	14'-6"	0.20	4'-6"	0.06	9'-0"

REVISION:

APPROVED: DECEMBER 11, 2000
STATE BRIDGE ENGINEER

CERTIFIED BY Thomas J. Wilson
PROFESSIONAL ENGINEER/THOMAS J. WILSON
LIC. NO. 21690 8-30-10

STATE AID PROJ. NO. 07-599-054

FIG. 5-395.101 (A)

TITLE: BARREL DETAILS

DES: TJW | DRN: SUK | APPROVED:
CHK: DSP | CHK: DSP

SHEET NO. B2 OF B5 SHEETS

CULVERT NO. 07J22

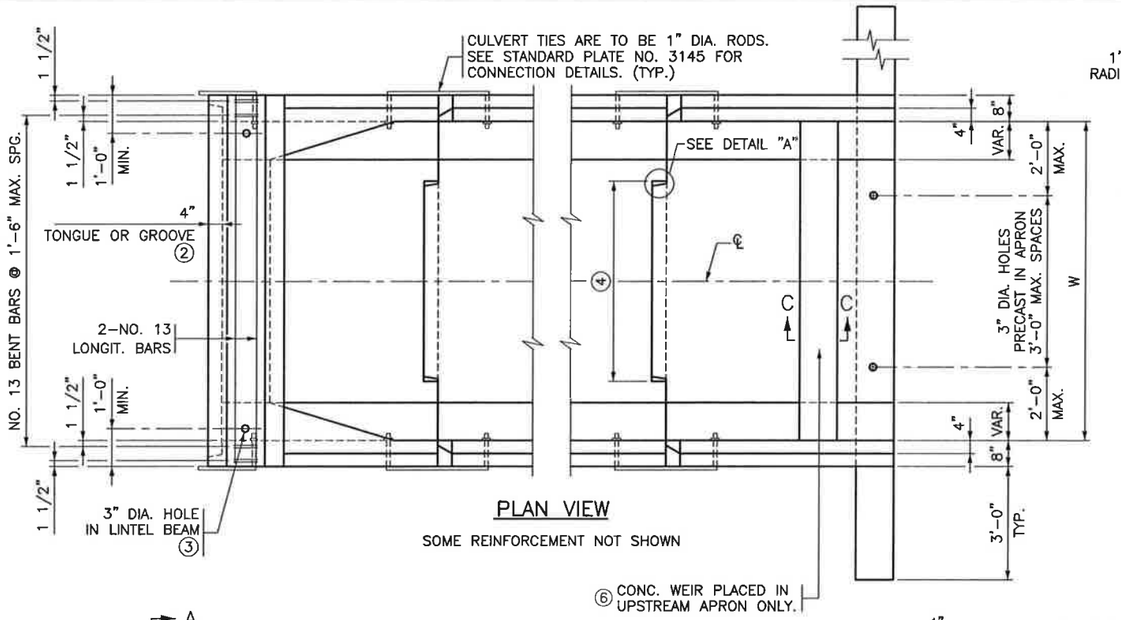

PLAN VIEW

SOME REINFORCEMENT NOT SHOWN

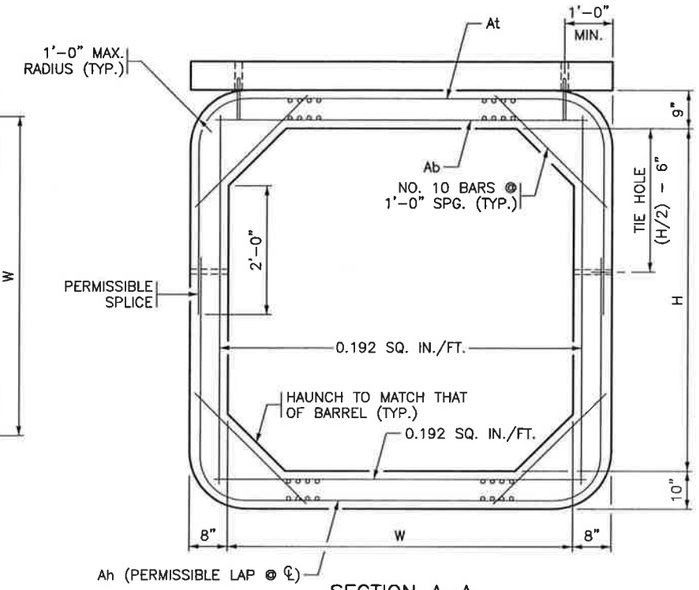

SECTION A-A

CONSTRUCTION NOTES

SEE FIG. 5-395.101(A) AND FIG. 5-395.101(B) FOR ADDITIONAL DIMENSIONS AND CONSTRUCTION NOTES.

ALL END SECTIONS REQUIRE CURB ON LINTEL BEAM.

ON ALL END SECTIONS FOR WATERWAYS, USE DROPWALLS ON INLET AND OUTLET ENDS.

LONGITUDINAL REINFORCEMENT PARALLEL TO THE AXIS OF THE CULVERT SHALL HAVE A MINIMUM OF 0.06 SQUARE INCHES PER PERIPHERAL FOOT ON ALL FACES OF THE BARREL, EXCEPT IN THE TONGUE AND GROOVE AREA.

SEE FIG. 5-395.115 FOR EMBANKMENT PROTECTION.

FINISH ALL EXPOSED EDGES OF CONCRETE WITH 1/2" OR 3/4" CHAMFER OR RADIUS UNLESS OTHERWISE NOTED.

① ~~WITH DOUBLE BOXES LOCATE DROPWALL JOINTS BETWEEN END SECTIONS. SEE FIG. 5-395.111 FOR ALTERNATE DROPWALLS. LIMITS OF EXCAVATION FOR DROPWALL TO BE APPROXIMATELY THE SAME AS DROPWALL DIMENSIONS. DROPWALL TO BE CONCRETE MIX NO. 1A43 OR MIX NO. 3Y43. FURNISHING AND INSTALLATION OF DROPWALL TO BE INCLUDED IN PRICE BID FOR END SECTIONS. DROPWALL NOT REQUIRED FOR NON-WATERWAY USE.~~

② CHECK LOCATION TO DETERMINE WHETHER A TONGUE OR A GROOVE IS USED.

③ FILL HOLE WITH GROUT. GROUT SHALL CONSIST OF 1 PART CEMENT AND 2 PARTS SAND. USE TYPE 1A AIR ENTRAINED PORTLAND CEMENT. GROUT MIX SHALL HAVE A MAXIMUM SLUMP OF 4".

④ ~~3'-6" TONGUE AND 3'-7" GROOVE FOR 6'-0" WIDE CULVERTS.~~ 5'-0" TONGUE AND 5'-1" GROOVE FOR CULVERTS OVER 6'-0" WIDE. CENTER TONGUE AND GROOVE ON ℄ OF EACH APRON JOINT.

⑤ AS AN ALTERNATE TO THE ONE LAYER MESH, PROVIDE TWO LAYERS OF REBAR OR WIRE MESH WITH THE STEEL AREA EQUAL TO HALF OF THE TEMPERATURE STEEL PER CODE REQUIREMENTS IN EACH FACE OF THE DROPWALL.

⑥ CONSTRUCTION OF WEIR TO BE INCLUDED IN BID ITEM 2412.512 - 14'x4' PRECAST CONCRETE BOX CULVERT END SECTION.

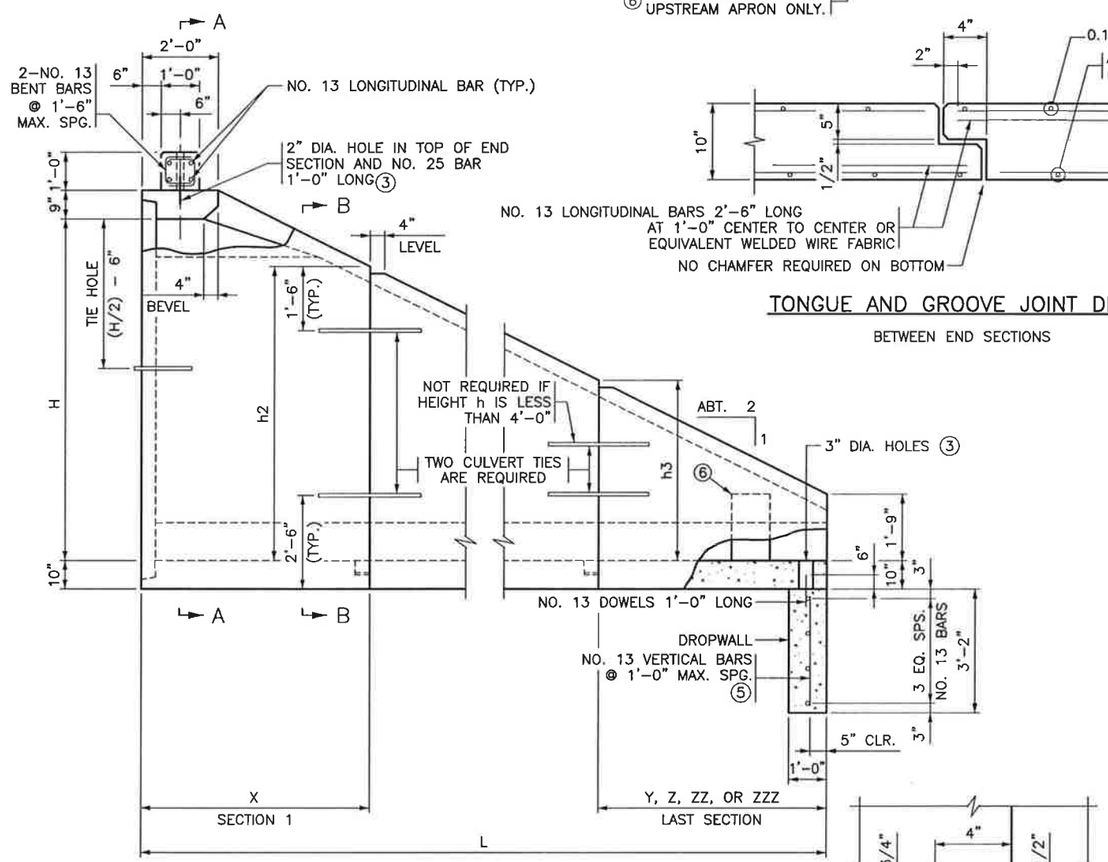

SIDE ELEVATION

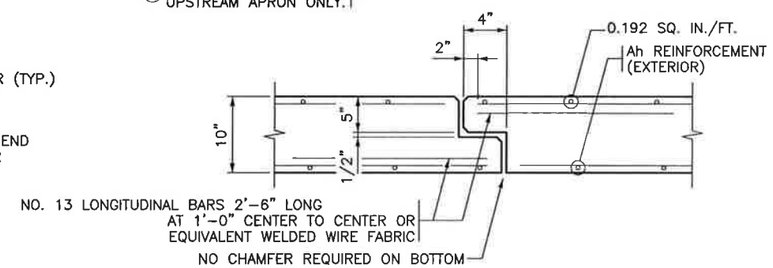

TONGUE AND GROOVE JOINT DETAIL

BETWEEN END SECTIONS

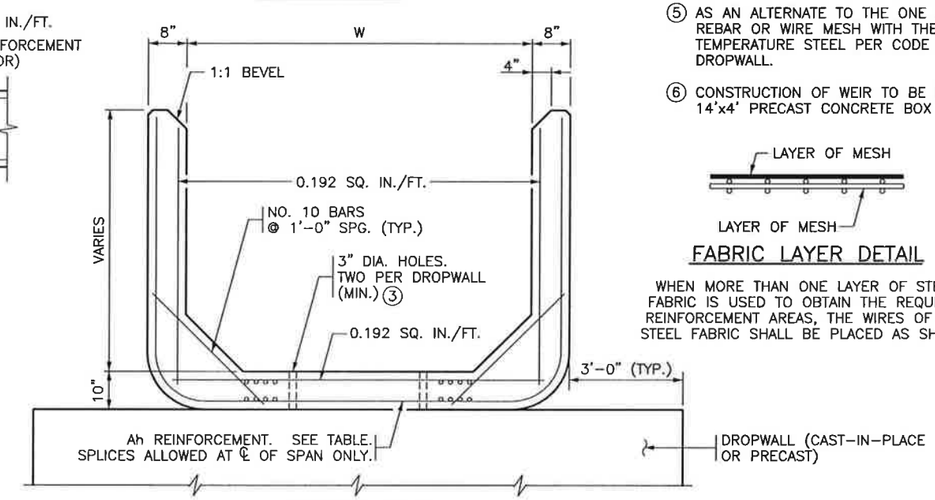

SECTION B-B

FABRIC LAYER DETAIL

WHEN MORE THAN ONE LAYER OF STEEL FABRIC IS USED TO OBTAIN THE REQUIRED REINFORCEMENT AREAS, THE WIRES OF THE STEEL FABRIC SHALL BE PLACED AS SHOWN.

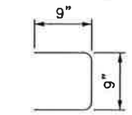

NO. 13 BENT BAR

At, Ab REINFORCEMENT		
WIDTH (FT.)	At (IN^2/FT.)	Ab (IN^2/FT.)
~~6~~	~~.27~~	~~.44~~
~~8~~	~~.47~~	~~.60~~
~~10~~	~~.62~~	~~.74~~
~~12~~	~~.88~~	~~1.06~~
14	1.20	1.58

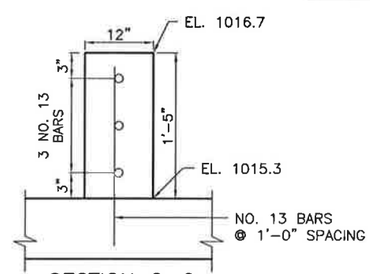

SECTION C-C

UPSTREAM APRON ONLY ⑥

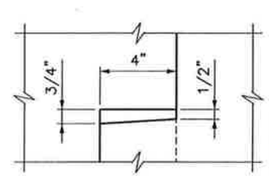

DETAIL "A"

APRON DIMENSIONS & Ah REINFORCEMENT																	
H	L	SECTION 1		h2	SECTION 2		h3	SECTION 3		h4	SECTION 4		h5	SECTION 5		h6
FT.	FT.	X	Ah		Y	Ah		Z	Ah		ZZ	Ah		ZZZ	Ah	
4	8	8'	0.192	1'-9"												
~~5~~	~~10~~	~~6'~~	~~0.192~~	~~3'-9"~~	~~4'~~	~~0.192~~	~~1'-9"~~									
~~6~~	~~12~~	~~6'~~	~~0.192~~	~~4'-9"~~	~~6'~~	~~0.192~~	~~1'-9"~~									
~~7~~	~~14~~	~~6'~~	~~0.192~~	~~5'-9"~~	~~8'~~	~~0.192~~	~~1'-9"~~									
~~8~~	~~16~~	~~6'~~	~~0.20~~	~~6'-9"~~	~~6'~~	~~0.192~~	~~3'-9"~~	~~4'~~	~~0.192~~	~~1'-9"~~						
~~9~~	~~18~~	~~6'~~	~~0.29~~	~~7'-9"~~	~~6'~~	~~0.20~~	~~4'-9"~~	~~6'~~	~~0.192~~	~~1'-9"~~						
~~10~~	~~20~~	~~6'~~	~~0.42~~	~~8'-9"~~	~~6'~~	~~0.29~~	~~5'-9"~~	~~8'~~	~~0.192~~	~~1'-9"~~						
~~11~~	~~22~~	~~6'~~	~~0.60~~	~~9'-9"~~	~~6'~~	~~0.42~~	~~6'-9"~~	~~6'~~	~~0.192~~	~~3'-9"~~	~~4'~~	~~0.192~~	~~1'-9"~~			
~~12~~	~~24~~	~~6'~~	~~0.78~~	~~10'-9"~~	~~6'~~	~~0.60~~	~~7'-9"~~	~~6'~~	~~0.20~~	~~4'-9"~~	~~6'~~	~~0.192~~	~~1'-9"~~			
~~13~~	~~26~~	~~6'~~	~~1.03~~	~~11'-9"~~	~~6'~~	~~0.78~~	~~8'-9"~~	~~6'~~	~~0.28~~	~~5'-9"~~	~~8'~~	~~0.192~~	~~1'-9"~~			
~~14~~	~~28~~	~~6'~~	~~1.38~~	~~12'-9"~~	~~6'~~	~~1.03~~	~~9'-9"~~	~~6'~~	~~0.40~~	~~6'-9"~~	~~6'~~	~~0.192~~	~~3'-9"~~	~~4'~~	~~0.192~~	~~1'-9"~~

NOTE: Ah IS AREA OF REINFORCEMENT PER FOOT OF LENGTH (SQ. IN./FT.)

REVISION: 06-30-2003

APPROVED: DECEMBER 11, 2000

STATE BRIDGE ENGINEER

CERTIFIED BY Thomas J. Wilson

PROFESSIONAL ENGINEER/THOMAS J. WILSON

LIC. NO. 21690 8-30-10

STATE AID PROJ. NO. 07-599-054

FIG. 5-395.102 MOD.

TITLE: PRECAST CONCRETE END SECTION TYPE I - SINGLE OR DOUBLE BARREL FOR SKEWS UP TO 7 1/2°

DES: TJW | DRN: SUK | APPROVED:

CHK: DSP | CHK: DSP

SHEET NO. B3 OF B5 SHEETS

CULVERT NO. 07J22

CONTRACTED PROFILE

SCALE: HOR. 0' 50' 100' VER. 0' 5' 10'

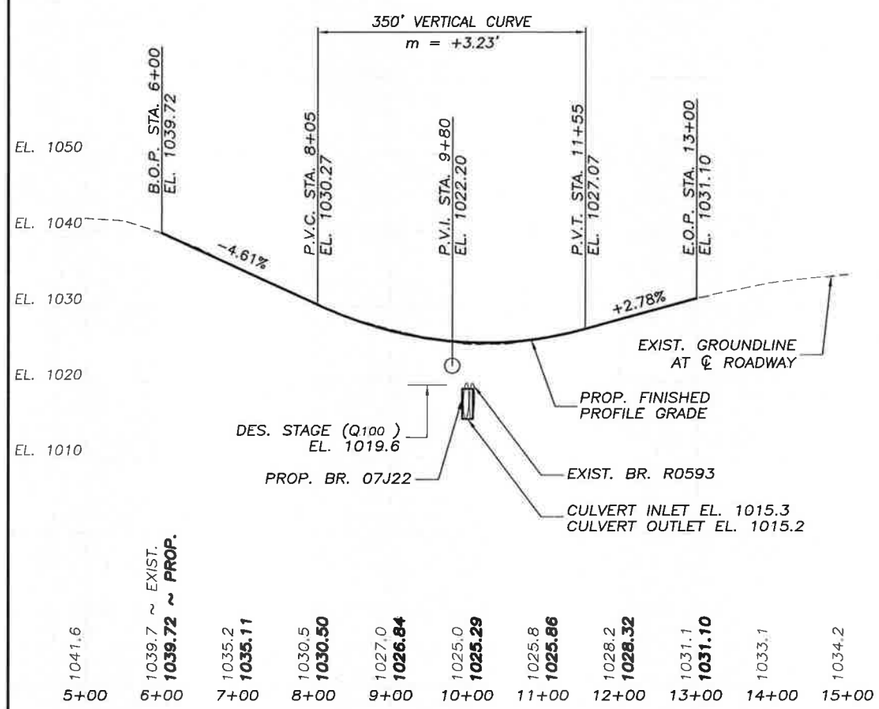

PLAT

SCALE: 0' 50' 100'

UTILITY INFORMATION
WARNING: DIAL GOPHER STATE ONE CALL AT 1-800-252-1166 48 HOURS IN ADVANCE OF CONSTRUCTION OPERATIONS TO OBTAIN COMPLETE UTILITY PROPERTY OWNERSHIP AND LOCATION INFORMATION.

UTILITY INFO AVAILABLE FOR PLAN PREPARATION:

BENCO ELECTRIC (UNVERIFIED)	(507) 387-7963
HICKORY TECH (BURIED)	(507) 386-3553
XCEL ENERGY (UNVERIFIED)	(608) 223-2014

NOTE: FIELD VERIFY ALL UTILITIES.

HORIZONTAL CURVE DATA (1)
P.I. STA. 10+26.52
T = 335.77'
R = 300.00'
L = 504.96'
Δ = 96°26'23" RT.
Max "e" = 6.0%

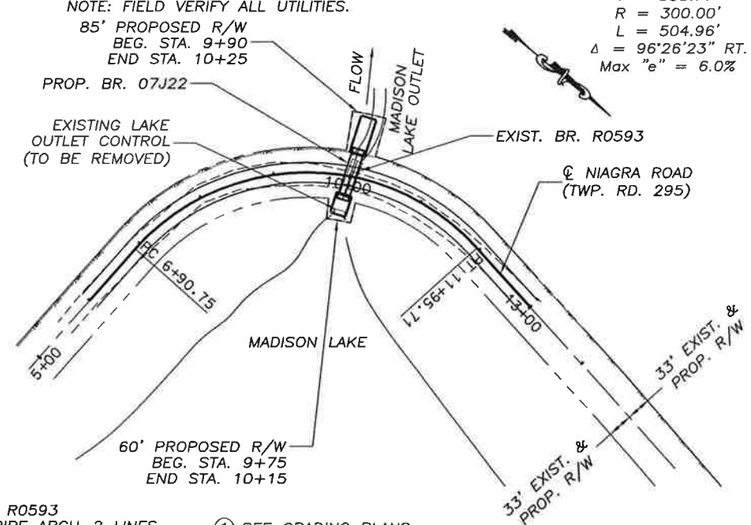

EXIST. BR. R0593
STEEL PIPE ARCH-2 LINES
SPAN LENGTH: 6.7'
ROAD WIDTH: 24.0'
YEAR BUILT: 1993

(1) SEE GRADING PLANS BY OTHERS FOR COMPLETE DETAILS.

TYPICAL SECTIONS & PERTINENT DATA

SCALES AS SHOWN

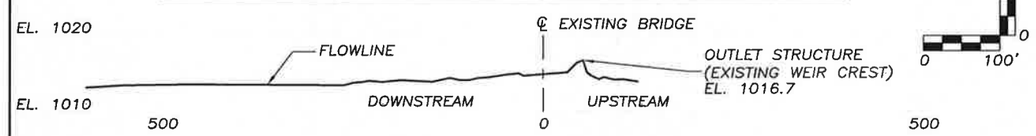

CHANNEL PROFILE

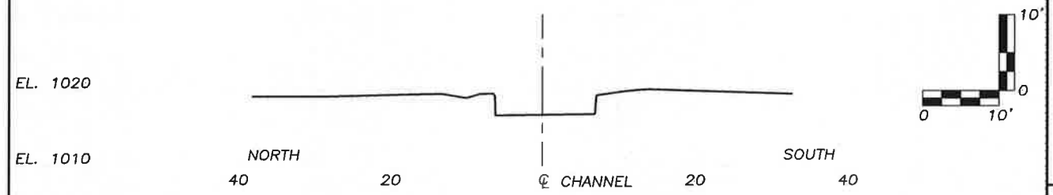

X-SECTION 53' UPSTREAM

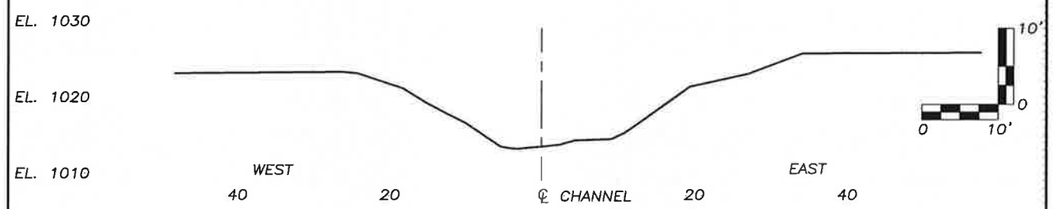

X-SECTION 123' DOWNSTREAM

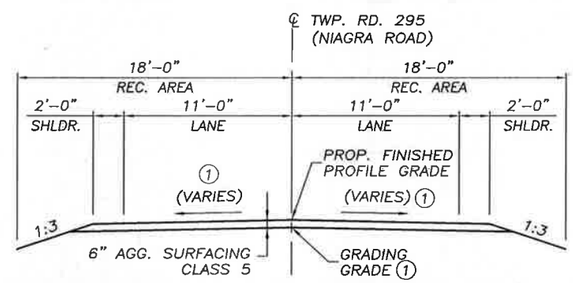

TYPICAL SECTION THRU PROPOSED ROADWAY

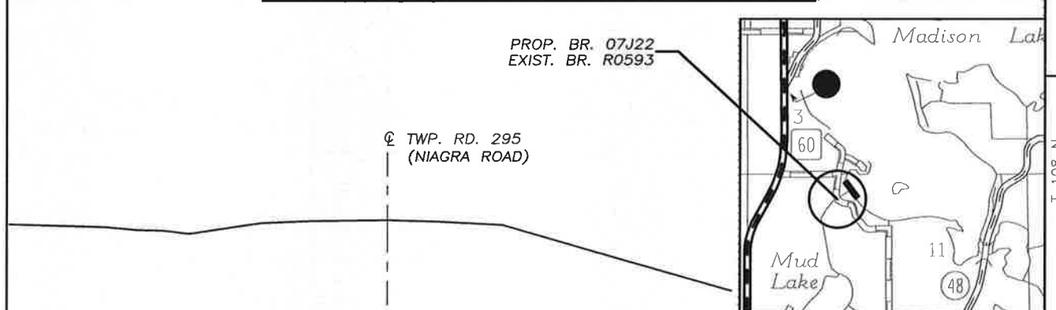

TYPICAL SECTION THRU EXISTING ROADWAY

INDEX MAP

Fed. Proj. No.

LOCATION ENGINEER'S OBSERVATION AT BRIDGE SITE

DATE .....

1. Special Features: Waterfalls, dams, floods, ice, debris, sliding banks, rec. boats.
2. Other bridges or culverts over the same stream (particularly structures which carry high water without overflow of roadway) :Given location, type, length, height above high water, cross-sectional area, etc.
3. Apparent Highwater Elevation 1018.98 Obtained From DNR
4. Other Data: Approx. velocity of water at time of survey .....

HYDRAULIC ENGINEER'S RECOMMENDATION

DATE 7-22-2010

Stream or Ditch Designation Madison Lake Outlet
Drainage Area 17.5 SQ. MI.
Max. Flood on Record UNK. C.F.S.
Max. Observed Highwater Elev. 1018.98
Design Flood (100 yr. freq.) 320 C.F.S.
Design Stage Elevation 1019.6
Total Stage Increase 0.8 Feet
Headwater Elevation 1020.4
Design Mean Velocity Through Structure 5.7 F.P.S.
Greatest Flood (500 yr. freq.) 460 C.F.S.
Total Stage Increase 1.6 Feet
Headwater Elevation 1022.2
Mean Velocity Through Structure 8.2 F.P.S.
Top of Weir Elevation 1016.7
Culvert Inlet Elevation 1015.3
Culvert Outlet Elevation 1015.2
Skew Angle 7°

ENGINEER'S RECOMMENDATION

DATE 7-22-2010

1 LINE-14'X4' PRECAST CONCRETE BOX CULVERT
7° SKEW, 26' FT. ROADWAY WIDTH

Bridge Survey Sheets made from: SURVEY NOTES FROM BLUE EARTH COUNTY HIGHWAY DEPARTMENT

Benchmark Elevation ..... (N.A.V.D./M.S.L. 1929 Adj./Assumed)
Location: .....

STATE OF MINNESOTA
DEPARTMENT OF TRANSPORTATION

BRIDGE SURVEY

AT MILE POINT ..... ON NIAGRA ROAD
PROPOSED BRIDGE LOCATED 0.8 MILES EAST OF JCT. T.H. 60 AT MADISON LAKE OUTLET.
SEC. 10 TWP. 109 N R. 25 W
TOWNSHIP LE RAY COUNTY BLUE EARTH
EXIST. BRIDGE NO. R0593
PROP. BRIDGE NO. 07J22

CERTIFIED BY Thomas J. Wilson LIC. NO. 21690 8-30-10

State Aid Proj. No. 07-599-054

Sheet No. B4 of B5 Sheets

Fed. Proj. No.

APPROACH GRADING UNDER SEPARATE CONTRACT.

LIMITS OF RANDOM RIPRAP AS SHOWN ARE APPROX. ONLY. EXACT LIMITS ARE TO BE DETERMINED BY THE ENGINEER IN THE FIELD.

(1) SEE GRADING PLAN BY OTHERS FOR COMPLETE DETAILS.

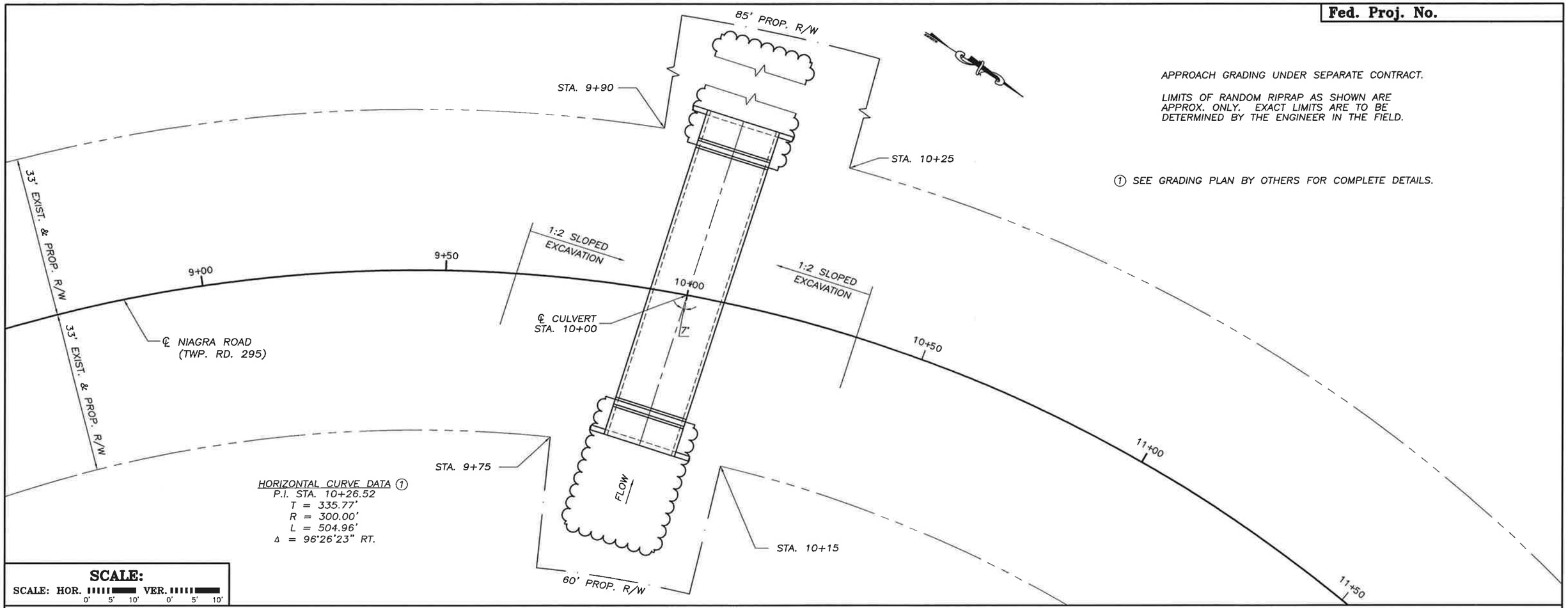

HORIZONTAL CURVE DATA (1)
P.I. STA. 10+26.52
T = 335.77'
R = 300.00'
L = 504.96'
Δ = 96°26'23" RT.

SCALE:
SCALE: HOR. 0' 5' 10' VER. 0' 5' 10'

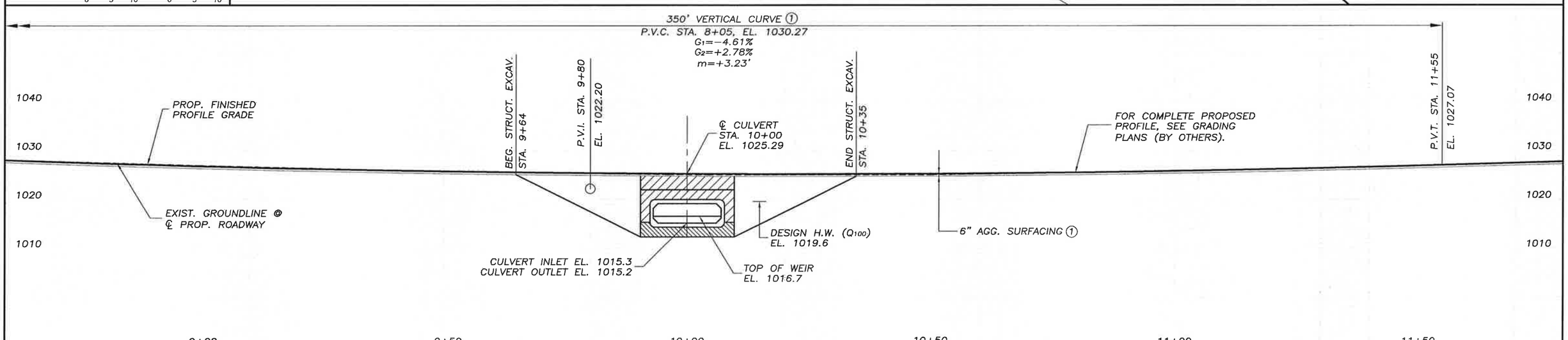

CERTIFIED BY Thomas J. Wilson PROFESSIONAL ENGINEER THOMAS J. WILSON LIC. NO. 21690 8-30-10	CULVERT SURVEY PLAN & PROFILE	DES.: TJW CHK.: DSP	DRN.: SUK CHK.: DSP	APPROVED:	CULVERT NO.
	S.A.P. 07-599-054	Sheet No. B5 of B5 Sheets			07J22