MINNESOTA DEPARTMENT OF TRANSPORTATION

BLUE EARTH COUNTY DEPARTMENT OF PUBLIC WORKS

RED JACKET BRIDGE (BR. NO. 6961)

SOUTH PIER REPLACEMENT & EROSION STABILIZATION

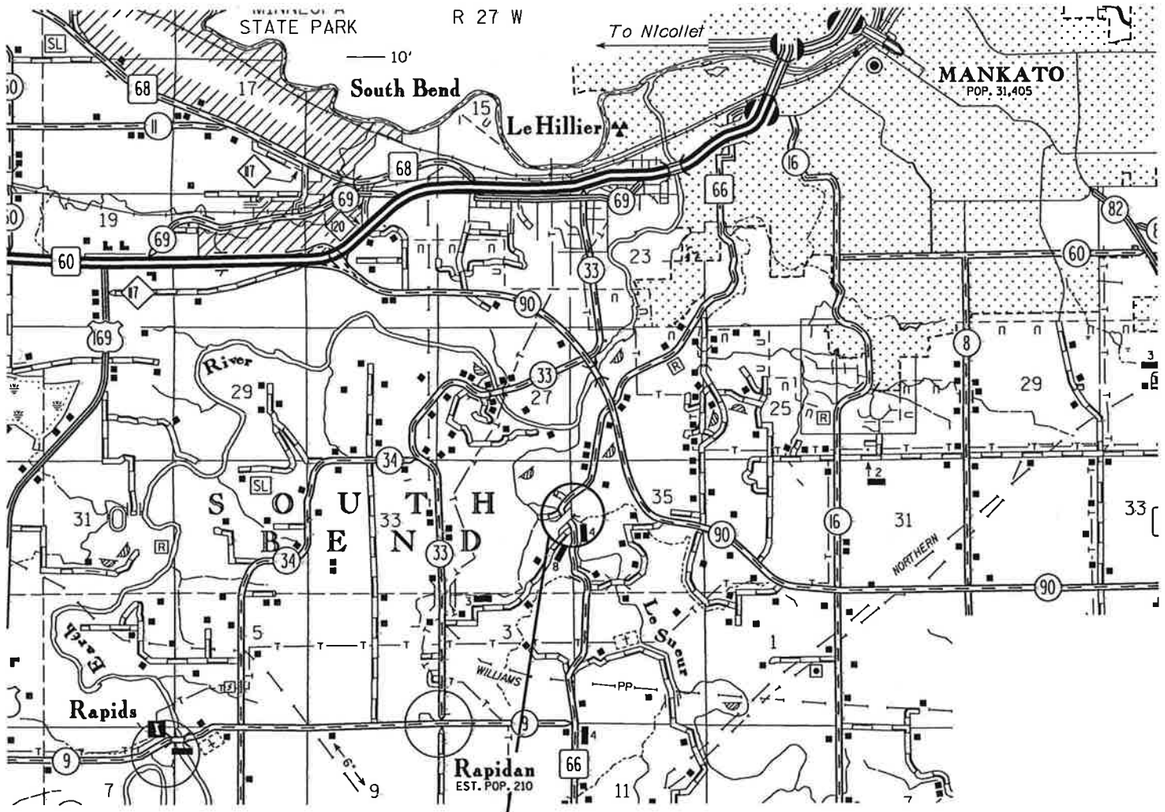

PROJECT LOCATION
COUNTY: BLUE EARTH

CONSTRUCTION NOTES

THE 2005 EDITION OF THE MINNESOTA DEPARTMENT OF TRANSPORTATION "STANDARD SPECIFICATIONS FOR CONSTRUCTION" SHALL GOVERN.

THE FIRST TWO DIGITS OF EACH BAR MARK INDICATE THE BAR NUMBER WHICH APPROXIMATES THE NOMINAL DIAMETER OF THE BAR IN MILLIMETERS (mm).

BARS MARKED WITH THE SUFFIX "E" SHALL BE EPOXY COATED IN ACCORDANCE WITH SPEC. 3301.

THE GEOTECHNICAL REPORT BY BRAUN INTERTEC CORP. DATED FEBRUARY 2, 2011 PROVIDES SOIL BORING INFORMATION FOR THE SOUTH PIER AND IS INCLUDED WITH THE CONTRACT DOCUMENTS.

THE SUBSURFACE UTILITY INFORMATION IN THIS PLAN IS UTILITY QUALITY LEVEL D. THIS UTILITY QUALITY LEVEL WAS DETERMINED ACCORDING TO THE GUIDELINES OF CI/ASCE 38-02, ENTITLED "STANDARD GUIDELINES FOR THE COLLECTION AND DEPICTION OF EXISTING SUBSURFACE UTILITY DATA".

THE PILE LOADS SHOWN IN THE PLANS AND THE CORRESPONDING NOMINAL PILE BEARING RESISTANCE (Rn) WERE COMPUTED USING LRFD METHODOLOGY. PILE BEARING RESISTANCE DETERMINED IN THE FIELD SHALL INCORPORATE THE METHODS AND/OR FORMULAS DESCRIBED IN THE SPECIAL PROVISIONS.

CONTRACTOR SHALL DRESS SLOPES AND PLACE FILTER MATERIALS AND RIPRAP IN APPROXIMATE AREAS AS DIRECTED BY THE ENGINEER.

DRAWINGS ARE NOT TO BE SCALED.

THE CONTRACTOR SHALL MAKE FIELD MEASUREMENTS AS NECESSARY PRIOR TO FABRICATION OF ALL COMPONENTS TO ASSURE PROPER FIT IN THE FINAL WORK.

BRIDGE SEAT REINFORCEMENT SHALL BE CAREFULLY PLACED TO AVOID INTERFERENCE WITH DRILLING HOLES FOR ANCHOR RODS. THE BEAMS SHALL BE ERECTED IN FINAL POSITION PRIOR TO DRILLING HOLES FOR AND PLACING ANCHOR RODS.

TIMBER CONSTRUCTION REQUIREMENTS SHALL CONFORM TO SPEC. 2403.3.

ALL TIMBER IS TO BE PRESSURE TREATED PER SPECIAL PROVISIONS.

ALL HARDWARE IS TO BE GALVANIZED PER SPEC. 3392.

ALL TIMBER IS SURFACED 4 SIDES UNLESS OTHERWISE NOTED.

ALL PLANK FOR DECK SHALL BE (DOUGLAS FIR-LARCH NO. 1 & BETTER). RAILING, RAILPOSTS, CURBS AND BOLTING BLOCKS SHALL BE SOUTHERN YELLOW PINE #2 OR BETTER. ALL OTHER TIMBER SHALL BE (DOUGLAS FIR).

INDEX

SHEET NO.	DESCRIPTION
1	TITLE SHEET & LOCATION MAP
2	SITE PLAN AND QUANTITIES
3	GENERAL PLAN AND ELEVATION
4-10	SOUTH PIER DETAILS
11	SOUTH PIER BILL OF REINFORCEMENT
12	CENTER PIER NOSE ARMOUR
13	COLUMN BAND DETAILS
14-15	SUPERSTRUCTURE AND BEARING DETAILS
16	B-DETAILS
17	AS-BUILT BRIDGE DATA

DESIGN DATA

2010 AND CURRENT INTERIM AASHTO LRFD BRIDGE DESIGN SPECIFICATIONS.
2009 AASHTO LRFD GUIDE SPECIFICATIONS FOR THE DESIGN OF PEDESTRIAN BRIDGES
LOAD AND RESISTANCE FACTOR DESIGN METHOD

SIDEWALK LOADING SPECIFICATION 90 P.S.F.
PEDESTRIAN LIVE LOAD OR
H10 VEHICLE LIVE LOAD WITHOUT IMPACT

MATERIAL DESIGN PROPERTIES:
REINFORCED CONCRETE:
f'c= 4 k.s.i. n = 8
Fy= 60 k.s.i. FOR REINFORCEMENT
STRUCTURAL STEEL:
fy= 50000 p.s.i. SPEC. 3309 (PAINTED)
TREATED TIMBER:
fb= 1150 P.S.I.

DECK AREA = 2565 SQ. FT.

RECOMMENDED FOR APPROVAL BLUE EARTH COUNTY ENGINEER
DATE 07 June 2011

SEH
3535 VADNAIS CENTER DRIVE
ST PAUL, MN 55110
PHONE (651) 490-2000
FAX (651) 490-2150

I HEREBY CERTIFY THAT THIS PLAN WAS PREPARED BY ME OR UNDER MY DIRECT SUPERVISION AND THAT I AM A DULY LICENSED PROFESSIONAL ENGINEER UNDER THE LAWS OF THE STATE OF MINNESOTA.
SIGNED Gaylen L. Perkuhn DATE 6-3-2011
NAME GAYLEN L PERKUHN LIC NO 15925

RED JACKET TRAIL
MINNESOTA
DEPARTMENT OF TRANSPORTATION

BRIDGE NO. 6961

PROPOSED BRIDGE LOCATED
RED JACKET TRAIL OVER THE LeSUEUR RIVER
IN BLUE EARTH COUNTY
RECONSTRUCT RIVER SPAN SOUTH PIER AND
REPLACE RIVER SPAN SUPERSTRUCTURE

IDENTIFICATION NO. 301

GENERAL PLAN AND ELEVATION

SEC 34 TWP 108 N R 27 W
SOUTH BEND TOWNSHIP BLUE EARTH CO

APPROVED N/A
STATE BRIDGE ENGINEER
DATE .....

COUNTY PROJECT NO. 102

TITLE:	DES: GLP	DR: MAW	APPROVED:	BRIDGE NO
TITLE SHEET	CHK: JAJ	CHK: GLP		6961
	SHEET NO 1 OF 17 SHEETS			

10:41:57 AM 6/3/2011 CR 152
s:\AE\B\Blueg\115013\5-dgn\51-cadd\dgn\redjacket_title1.dgn

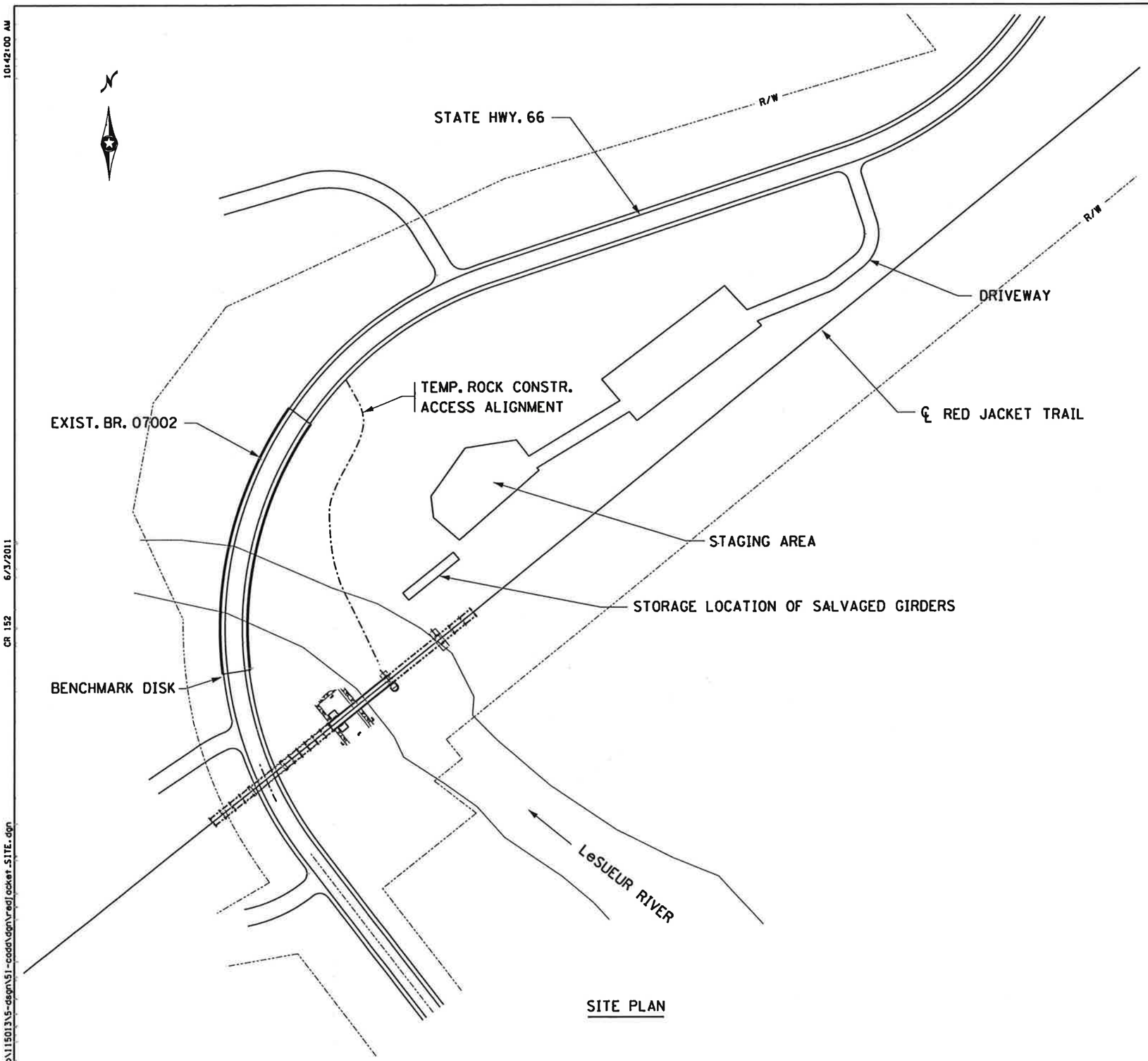

SITE PLAN

SCHEDULE OF QUANTITIES FOR ENTIRE BRIDGE

ITEM NO	ITEM	UNIT	QUANTITY
2011.601	CONSTRUCTION STAKING	LUMP SUM	1
2021.501	MOBILIZATION	LUMP SUM	1
① 2104.601	REMOVE REGULATED WASTE (BRIDGE)	LUMP SUM	1
2401.501	STRUCTURAL CONCRETE (1A43)	CU. YD.	83 (P)
2401.501	STRUCTURAL CONCRETE (3Y43)	CU. YD.	267 (P)
2401.541	REINFORCEMENT BARS	POUND	5210 (P)
2401.541	REINFORCEMENT BARS (EPOXY COATED)	POUND	91650 (P)
2401.601	STRUCTURE EXCAVATION	LUMP SUM	1
2401.601	FOUNDATION PREPARATION (SOUTH PIER)	LUMP SUM	1
2401.601	SLOPE PREPARATION	LUMP SUM	1
2402.521	STRUCTURAL STEEL (3309)	POUND	11600 (P)
2402.595	BEARING ASSEMBLY	EACH	2 (P)
2402.601	ASSEMBLE AND INSTALL SALVAGED BRIDGE	LUMP SUM	1
2403.502	TREATED TIMBER	MBM	0.5
2403.506	HARDWARE (GALV.)	POUND	100
2411.618	ARCHITECTURAL CONCRETE TEXTURE (ROCK FACE)	SQ. FT.	2314 (P)
2411.618	ARCHITECTURAL SURFACE FINISH (MULTI COLOR)	SQ. FT.	3090 (P)
2411.618	ANTI-GRAFFITI COATING	SQ. FT.	2314 (P)
2433.516	ANCHORAGES TYPE 1	EACH	22 (P)
2433.603	REPAIR STRUCTURAL CRACKS (EPOXY INJECTION)	LIN. FT.	150
2451.509	AGGREGATE BEDDING (CV)	CU. YD.	93 (P)
2452.510	STEEL H-PILING DRIVEN 12"	LIN. FT.	340
2452.511	STEEL H-PILING DELIVERED 12"	LIN. FT.	340
2452.520	STEEL H TEST PILE 25 FT LONG 12"	EACH	1
2452.618	STEEL SHEET PILING (PERMANENT)	SQ. FT.	1519 (P)
2511.501	RANDOM RIPRAP CLASS V	CU. YD.	413
2573.602	TEMPORARY ROCK CONSTRUCTION ENTRANCE	EACH	1

① COMPRISED OF UNUSED TREATED TIMBER MATERIAL ESTIMATED TO BE LESS THAN 5 CU. YDS.

BENCHMARK DISK

MnDOT DISK LOCATED IN THE SW CORNER OF BRIDGE 07002
X=556846.359
Y=198202.345
ELEVATION = 803.391 HARN GEO. POS. NAD83 (1996)

COUNTY PROJECT NO. 102

SEH
3535 VADNAIS CENTER DRIVE
ST PAUL, MN 55110
PHONE (651) 490-2000
FAX (651) 490-2150

I hereby certify that this plan, specification, or report was prepared by me or under my direct supervision and that I am a duly Licensed Professional Engineer under the laws of the state of Minnesota
Signature: Gaylen L. Perkuhn Date: 6-3-2011
Printed Name: GAYLEN L PERKUHN Reg. No. 15925

TITLE: SITE PLAN AND QUANTITIES

DES: GLP	DR: MAW	APPROVED:
CHK: JAJ	CHK: GLP	

SHEET NO 2 OF 17 SHEETS

BRIDGE NO 6961

10:42:00 AM 6/3/2011 CR 152 s:\AE\B\Bluep\115013\5-dsgn\51-cadd\dgn\redjacket_SITE.dgn

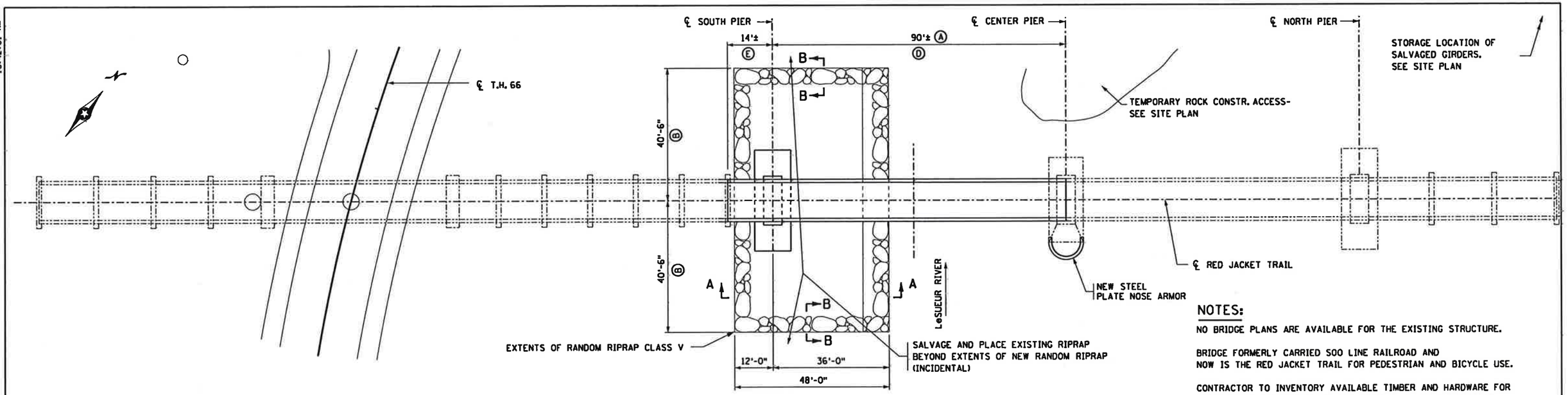

GENERAL PLAN

NOTES:

NO BRIDGE PLANS ARE AVAILABLE FOR THE EXISTING STRUCTURE.

BRIDGE FORMERLY CARRIED SOO LINE RAILROAD AND NOW IS THE RED JACKET TRAIL FOR PEDESTRIAN AND BICYCLE USE.

CONTRACTOR TO INVENTORY AVAILABLE TIMBER AND HARDWARE FOR MISSING AND DAMAGED ITEMS AND PROVIDE A LIST OF MISSING AND DAMAGED ITEMS TO THE COUNTY. THE COUNTY MAY SUPPLY THE MISSING ITEMS OR AUTHORIZE THE CONTRACTOR TO FURNISH THROUGH A CHANGE ORDER.

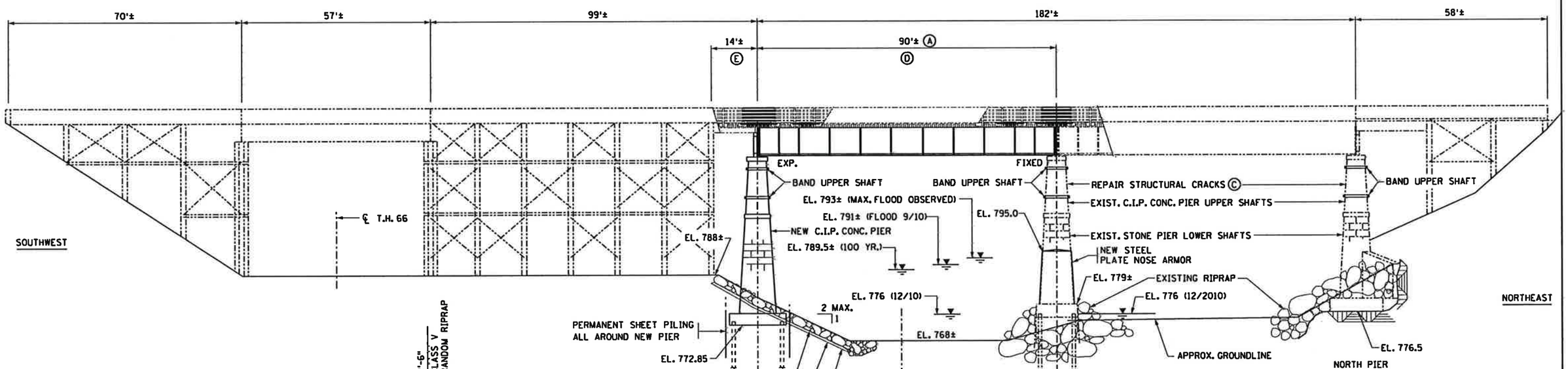

GENERAL ELEVATION

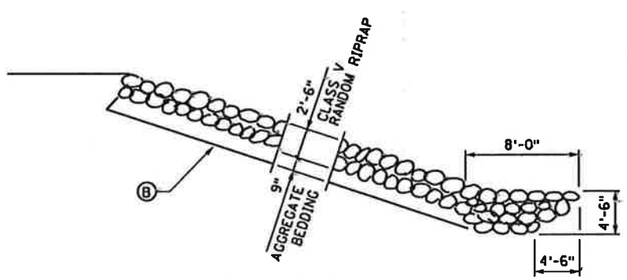

RIPRAP SECTION A-A

RIPRAP DETAIL

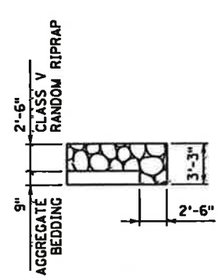

SECTION B-B

RIPRAP EDGE DETAIL

NOTES:

Ⓐ LOCATION OF NEW PIER ESTABLISHED BY THE CONTRACTOR. SEE SPECIAL PROVISIONS FOR "CONSTRUCTION STAKING".

Ⓑ BRIDGE CONTRACTOR SHALL EXCAVATE AND FILL TO THESE LINES FOR APPROX. 24.5' LT. AND RT. OF C/L RDWY. THEN TAPER AT A 2:1 SLOPE TO NATURAL CHANNEL SLOPES. INCLUDED IN PRICE BID FOR "SLOPE PREPARATION".

Ⓒ REPAIR UPPER CONCRETE SHAFT AREAS OF CENTER AND NORTH PIERS.

Ⓓ INSTALL SALVAGED STEEL GIRDERS, SOUTHWEST BEARING, DECK AND RAILING. INCLUDED UNDER ITEM "ASSEMBLE AND INSTALL SALVAGED BRIDGE".

Ⓔ INSTALL SALVAGED TREATED TIMBER SPAN, SHORT TIMBER COLUMNS, DECK AND RAILING. INCLUDED UNDER ITEM "ASSEMBLE AND INSTALL SALVAGED BRIDGE".

COUNTY PROJECT NO. 102

SEH
3535 VADNAIS CENTER DRIVE
ST PAUL, MN 55110
PHONE (651) 490-2000
FAX (651) 490-2150

I hereby certify that this plan, specification, or report was prepared by me or under my direct supervision and that I am a duly Licensed Professional Engineer under the laws of the state of Minnesota

Signature: Gaylen L. Perkuhn Date: 6-3-2011

Printed Name: GAYLEN L PERKUHN Reg. No. 15925

TITLE: GENERAL PLAN AND ELEVATION

DES: GLP	DR: MAW	APPROVED:	BRIDGE NO
CHK: JAJ	CHK: GLP		6961
SHEET NO 3 OF 17 SHEETS			

10:42:01 AM
6/3/2011
CR 152
s:\AE\B\B1uap\1150133\5-dsgn\51-cadd\dgn\redjacket_GPE.dgn

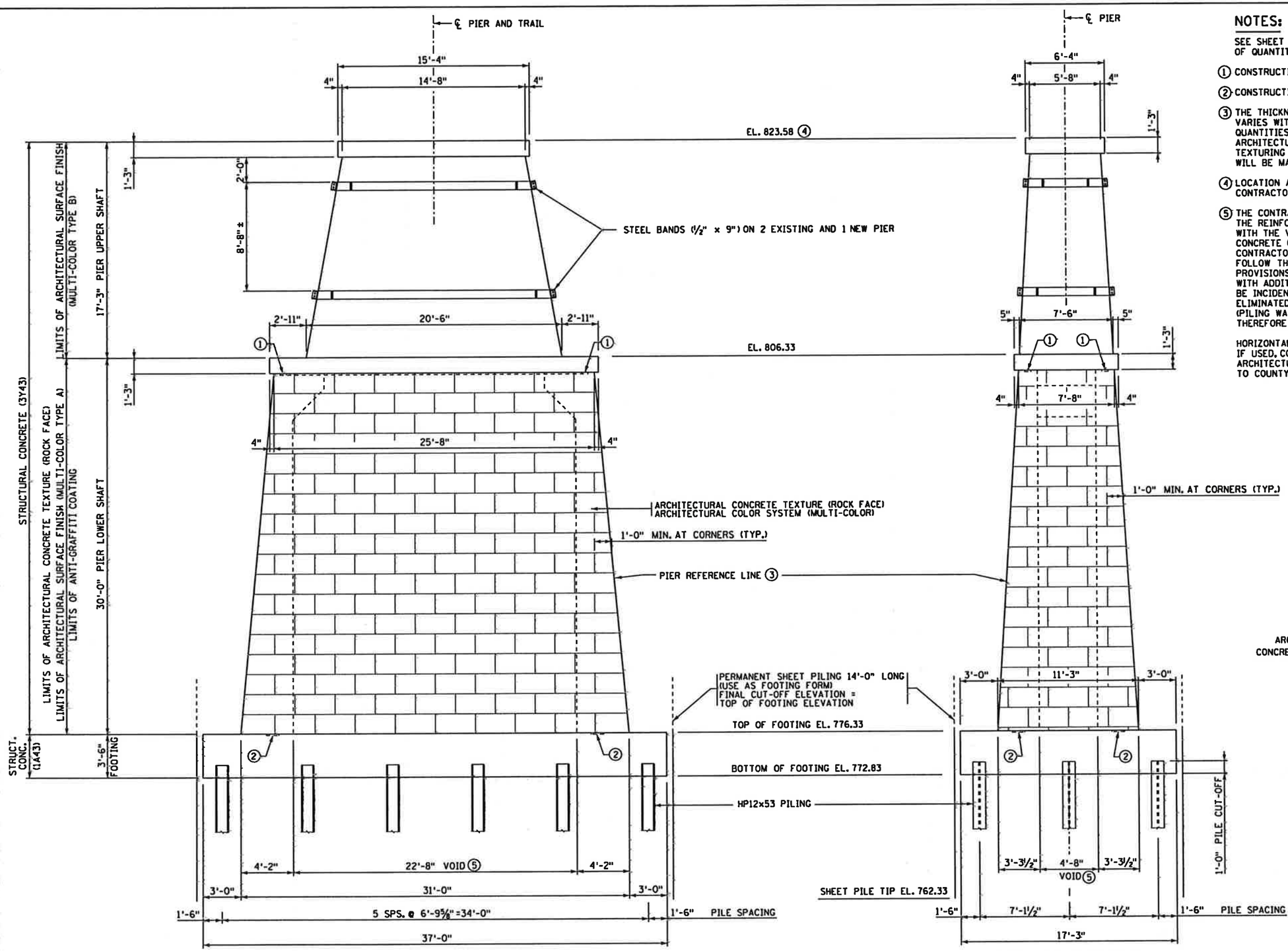

NOTES:

SEE SHEET 11 FOR BILL OF REINFORCEMENT AND SUMMARY OF QUANTITIES.

① CONSTRUCTION JOINT AND 2"×6" KEYWAY.

② CONSTRUCTION JOINT AND 2"×12" KEYWAY WITH WATERSTOP.

③ THE THICKNESS OF THE ARCHITECTURAL CONCRETE TEXTURE VARIES WITH THE TEXTURE RELIEF. THE STRUCTURAL CONCRETE 3Y43 QUANTITIES DO NOT INCLUDE THE MATERIAL WITHIN THE ARCHITECTURAL CONCRETE TEXTURE. MATERIAL NEEDED FOR THE TEXTURING SHALL BE INCIDENTAL FOR WHICH NO DIRECT PAYMENT WILL BE MADE. SEE SPECIAL PROVISIONS. SEE DETAIL "A" BELOW.

④ LOCATION AND ELEVATION OF NEW PIER ESTABLISHED BY THE CONTRACTOR. SEE SPECIAL PROVISIONS FOR "CONSTRUCTION STAKING".

⑤ THE CONTRACTOR MAY PLACE THE LOWER SHAFT WITHOUT THE VOID. THE REINFORCING STEEL SHALL BE PLACED AS SHOWN IN THE PLANS WITH THE VOID. NO INCREASE IN CONCRETE VOLUME FOR STRUCTURAL CONCRETE (3Y43) WILL BE MEASURED IF THE VOID IS ELIMINATED FOR CONTRACTOR CONVENIENCE. THE CONCRETE POUR AND MIX DESIGN SHALL FOLLOW THE MASS CONCRETE PROVISIONS STATED IN THE SPECIAL PROVISIONS. THE MASS CONCRETE REQUIREMENTS AND COSTS, ALONG WITH ADDITIONAL CONCRETE TO FILL THE VOID, SHALL BE INCIDENTAL TO STRUCTURAL CONCRETE (3Y43) IF THE VOID IS ELIMINATED FOR CONTRACTOR CONVENIENCE.
(PILING WAS DESIGNED TO ACCOUNT FOR VOIDED OR SOLID PIER SHAFT, THEREFORE NO CHANGE WOULD BE REQUIRED IN THE NUMBER OF PILES).

HORIZONTAL CONSTRUCTION JOINT IS PERMISSABLE IN LOWER SHAFT. IF USED, CONTRACTOR IS TO LOCATE JOINT IN COURSE JOINTS IN ARCHITECTURAL TEXTURE AND SUBMIT LOCATION AND DETAILS OF JOINT TO COUNTY FOR APPROVAL.

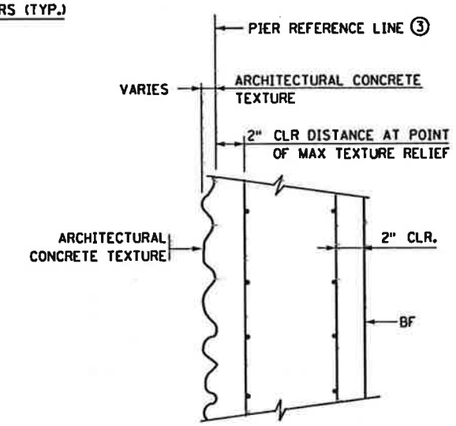

DETAIL "A"

COUNTY PROJECT NO. 102

SEH
3535 VADNAIS CENTER DRIVE
ST PAUL, MN 55110
PHONE (651) 490-2000
FAX (651) 490-2150

I hereby certify that this plan, specification, or report was prepared by me or under my direct supervision and that I am a duly Licensed Professional Engineer under the laws of the state of Minnesota

Signature: Daylen L. Perkuhn Date: 6-3-2011

Printed Name: DAYLEN L. PERKUHN Reg. No. 15925

TITLE: SOUTH PIER DETAILS

DES: GLP	DR: MAW	APPROVED:
CHK: JAJ	CHK: GLP	

SHEET NO 4 OF 17 SHEETS

BRIDGE NO 6961

10:42:03 AM 6/3/2011 CR 152
s:\AE\B\B1uwp\115013\5-dsgn\51-cadd\dgn\radjacket_pier.dgn

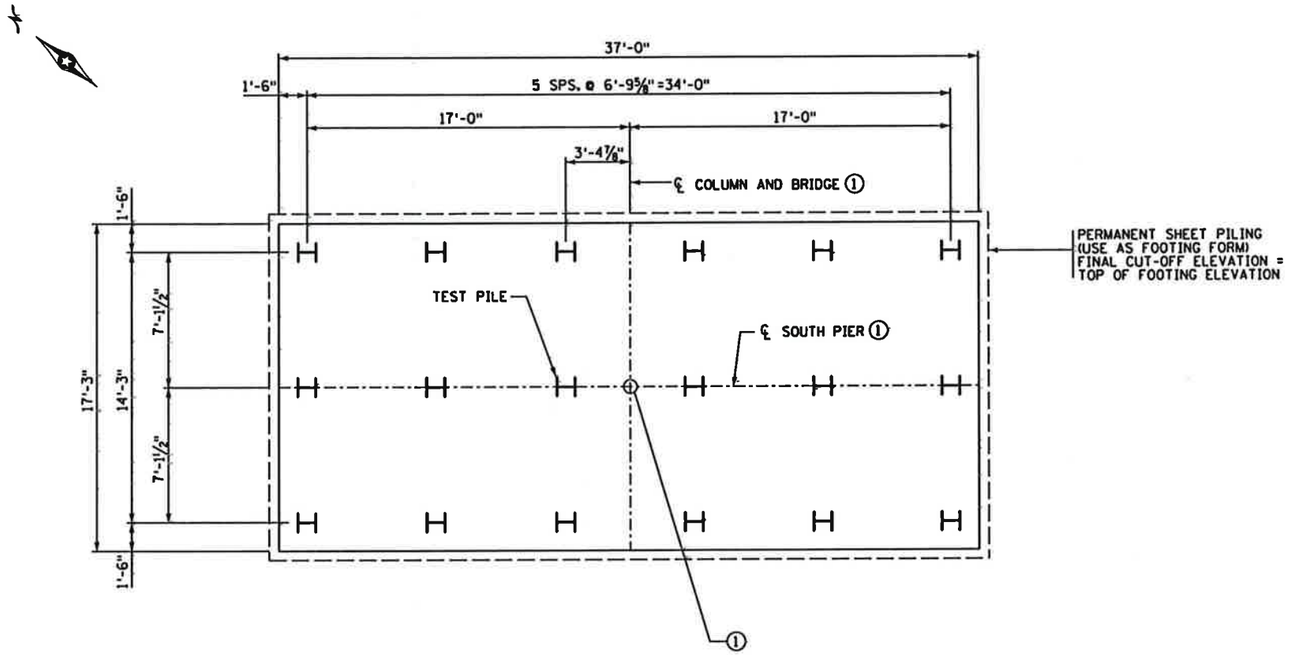

PIER FOOTING PLAN

PILE NOTES

1 STEEL H TEST PILE 25 FT. LONG
17 STEEL H-PILING 12" EST LENGTH 20 FT.
18 STEEL H-PILING 12" REQ'D FOR PIER.

PILE SPACING SHOWN IS AT BOTTOM OF FOOTING.

ALL PILES TO BE HP12x53.

FOR PILE SPLICE DETAILS SEE DETAIL B202.

SOUTH PIER COMPUTED PILE LOAD - TONS/PILE	
FACTORED DEAD LOAD	74.1
FACTORED LIVE LOAD	0.0
FACTORED OVERTURNING	30.0
*FACTORED DESIGN LOAD	104.1

*BASED ON STRENGTH III LOAD COMBINATION

SOUTH PIER REQUIRED NOMINAL PILE BEARING RESISTANCE Rn - Tons / Pile		
FIELD CONTROL METHOD	φ_{dyn}	$*R_n$
MnDOT NOMINAL RESISTANCE FORMULA	0.40	260.3
PDA	0.65	160.2

$*R_n$ = (FACTORED DESIGN LOAD) / φ_{dyn}

NOTES

SEE SHEET 11 FOR BILL OF REINFORCEMENT AND SUMMARY OF QUANTITIES.

F.F.=FRONT FACE
B.F.=BACK FACE
E.F.=EACH FACE

① LOCATION OF NEW PIER ESTABLISHED BY THE CONTRACTOR. SEE SPECIAL PROVISIONS FOR "CONSTRUCTION STAKING".

COUNTY PROJECT NO. 102

SEH
3535 VADNAIS CENTER DRIVE
ST PAUL, MN 55110
PHONE (651) 490-2000
FAX (651) 490-2150

I hereby certify that this plan, specification, or report was prepared by me or under my direct supervision and that I am a duly Licensed Professional Engineer under the laws of the state of Minnesota
Signature: Gaylen L. Perkuhn Date: 6-3-2011
Printed Name: GAYLEN L PERKUHN Reg. No. 15925

TITLE: SOUTH PIER DETAILS

DES: GLP	DR: MAW	APPROVED:
CHK: JAJ	CHK: GLP	

SHEET NO 5 OF 17 SHEETS

BRIDGE NO 6961

s:\AE\B\Blue\115013\5-dsgn\51-cadd\dgn\redjacket_pier.dgn CR 152 6/3/2011 10:42:03 AM

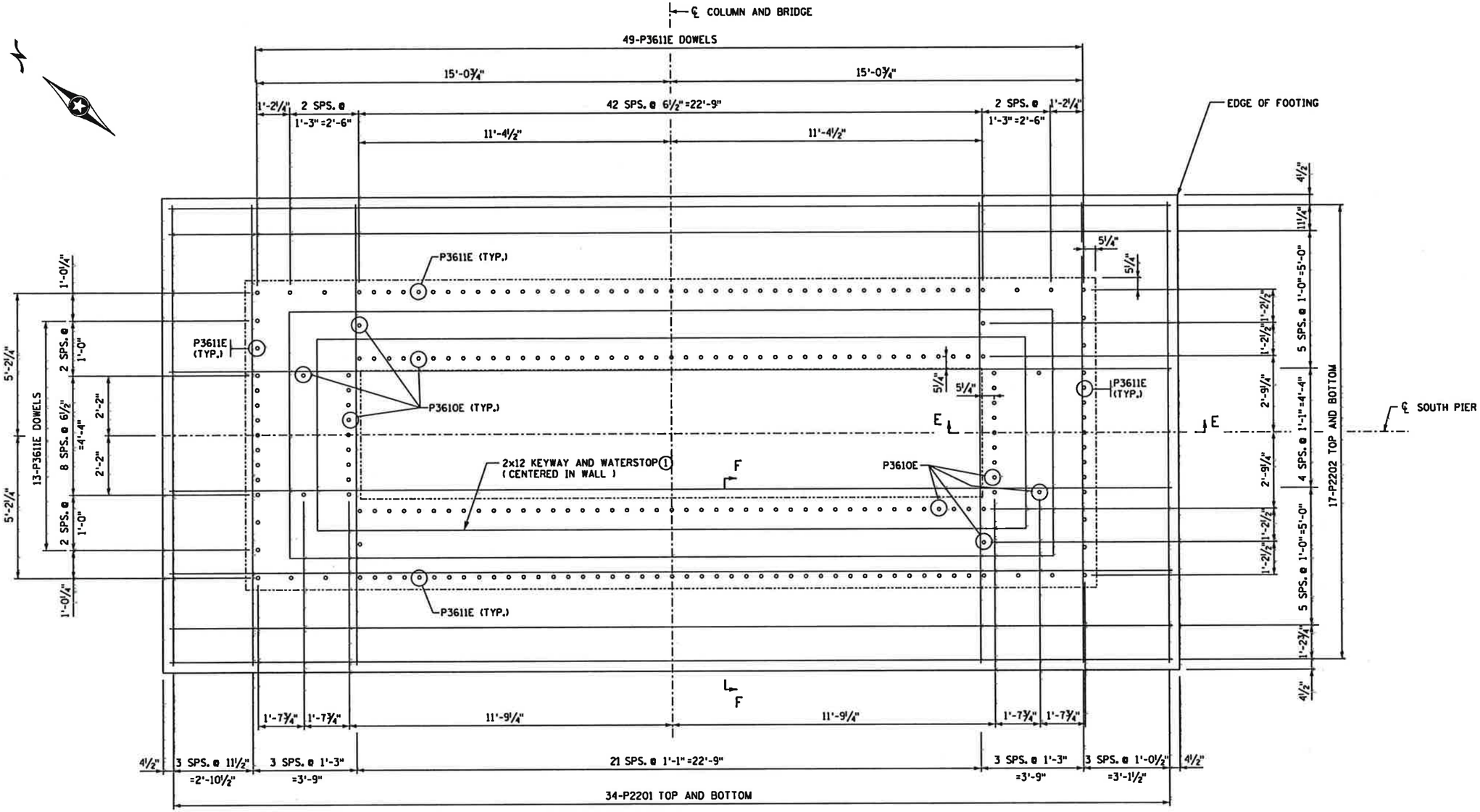

PIER FOOTING PLAN - REINFORCEMENT

NOTES

SEE SHEET 11 FOR BILL OF REINFORCEMENT AND SUMMARY OF QUANTITIES.

SEE SHEET 10 FOR SECTIONS E-E & F-F.

F.F.=FRONT FACE
B.F.=BACK FACE
E.F.=EACH FACE

① WATERSTOP MAY BE 6" PVC BULB TYPE OR HYDROPHILIC (INCIDENTAL).

COUNTY PROJECT NO. 102

SEH
3535 VADNAIS CENTER DRIVE
ST PAUL, MN 55110
PHONE (651) 490-2000
FAX (651) 490-2150

I hereby certify that this plan, specification, or report was prepared by me or under my direct supervision and that I am a duly Licensed Professional Engineer under the laws of the state of Minnesota

Signature: Gaylen L. Perkuhn Date: 6-3-2011
Printed Name: GAYLEN L. PERKUHN Reg. No. 15925

TITLE: SOUTH PIER DETAILS

DES: GLP	DR: MAW	APPROVED:	BRIDGE NO 6961
CHK: JAJ	CHK: GLP		
SHEET NO 6 OF 17 SHEETS			

10:42:06 AM 6/3/2011 CR 152
s:\AE\B\Bluep\115013\5-dsgn\51-cadd\dgn\redjacket_pier_rebar.dgn

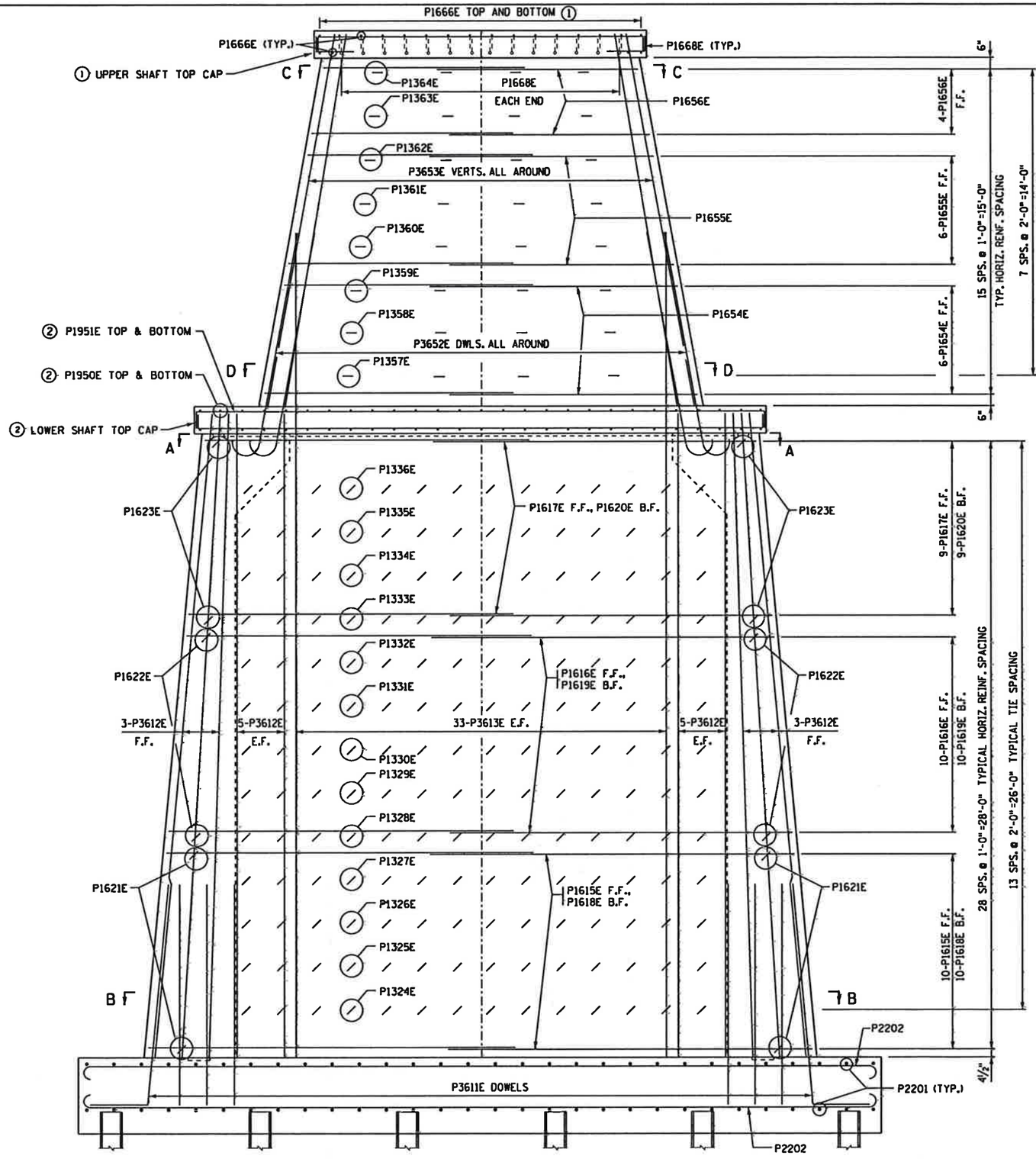

SIDE ELEVATION VIEW

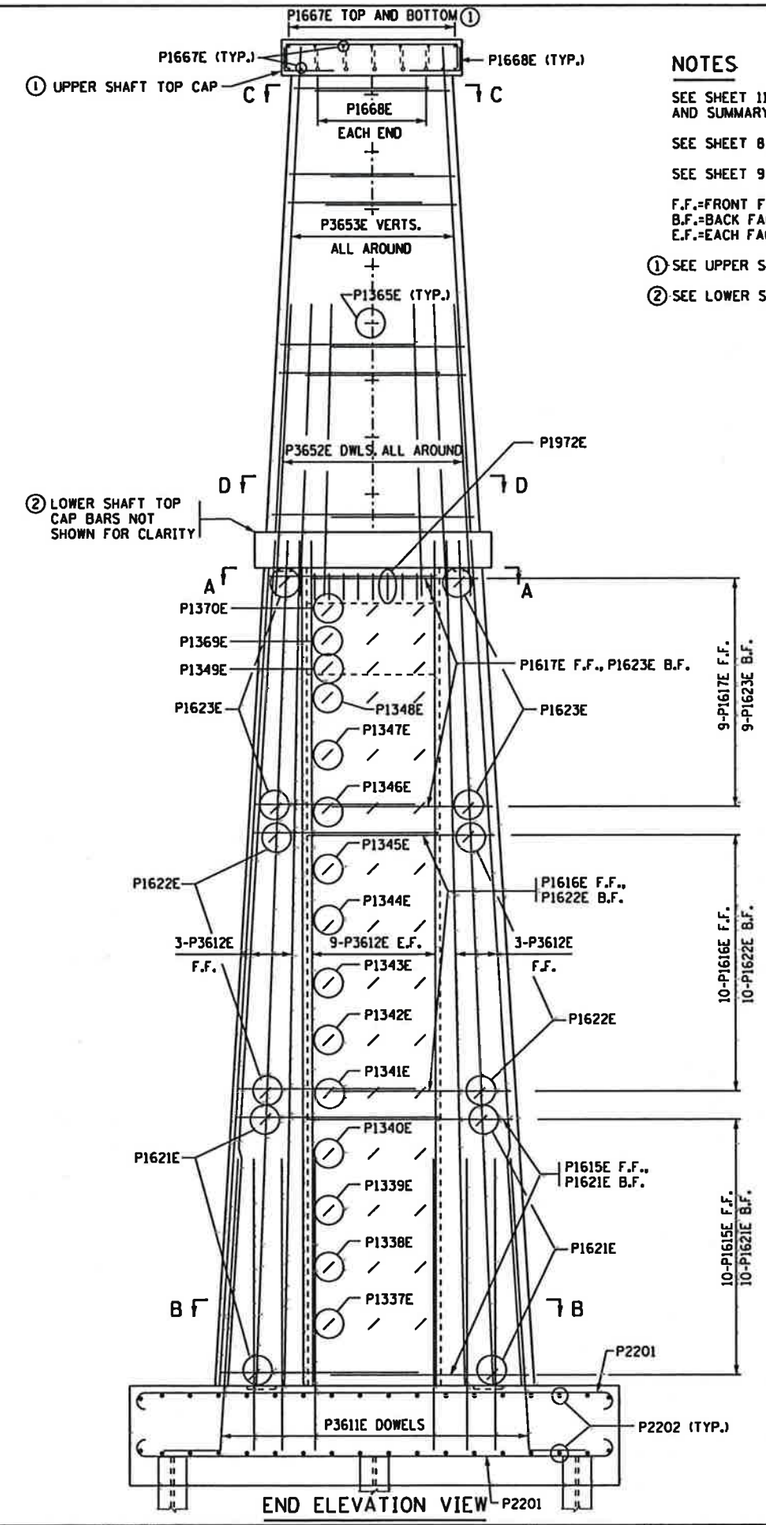

END ELEVATION VIEW

NOTES

SEE SHEET 11 FOR BILL OF REINFORCEMENT AND SUMMARY OF QUANTITIES.

SEE SHEET 8 FOR SECTIONS A-A, B-B.

SEE SHEET 9 FOR SECTIONS C-C, D-D.

F.F.=FRONT FACE
B.F.=BACK FACE
E.F.=EACH FACE

(1) SEE UPPER SHAFT TOP CAP PLAN ON SHEET 9.

(2) SEE LOWER SHAFT TOP CAP PLAN ON SHEET 9.

COUNTY PROJECT NO. 102

SEH
3535 VADNAIS CENTER DRIVE
ST PAUL, MN 55110
PHONE (651) 490-2000
FAX (651) 490-2150

I hereby certify that this plan, specification, or report was prepared by me or under my direct supervision and that I am a duly Licensed Professional Engineer under the laws of the state of Minnesota

Signature: Gaylen L. Perkuhn Date: 6-3-2011
Printed Name: GAYLEN L. PERKUHN Reg. No. 15925

TITLE: SOUTH PIER DETAILS

DES: GLP	DR: MAW	APPROVED:
CHK: JAJ	CHK: GLP	

SHEET NO 7 OF 17 SHEETS

BRIDGE NO 6961

s:\AE\B\Bridge\115013\5-dgn\51-cadd\dgn\rad\jacket_pier_rebar.dgn CR 152 6/3/2011 10:42:05 AM

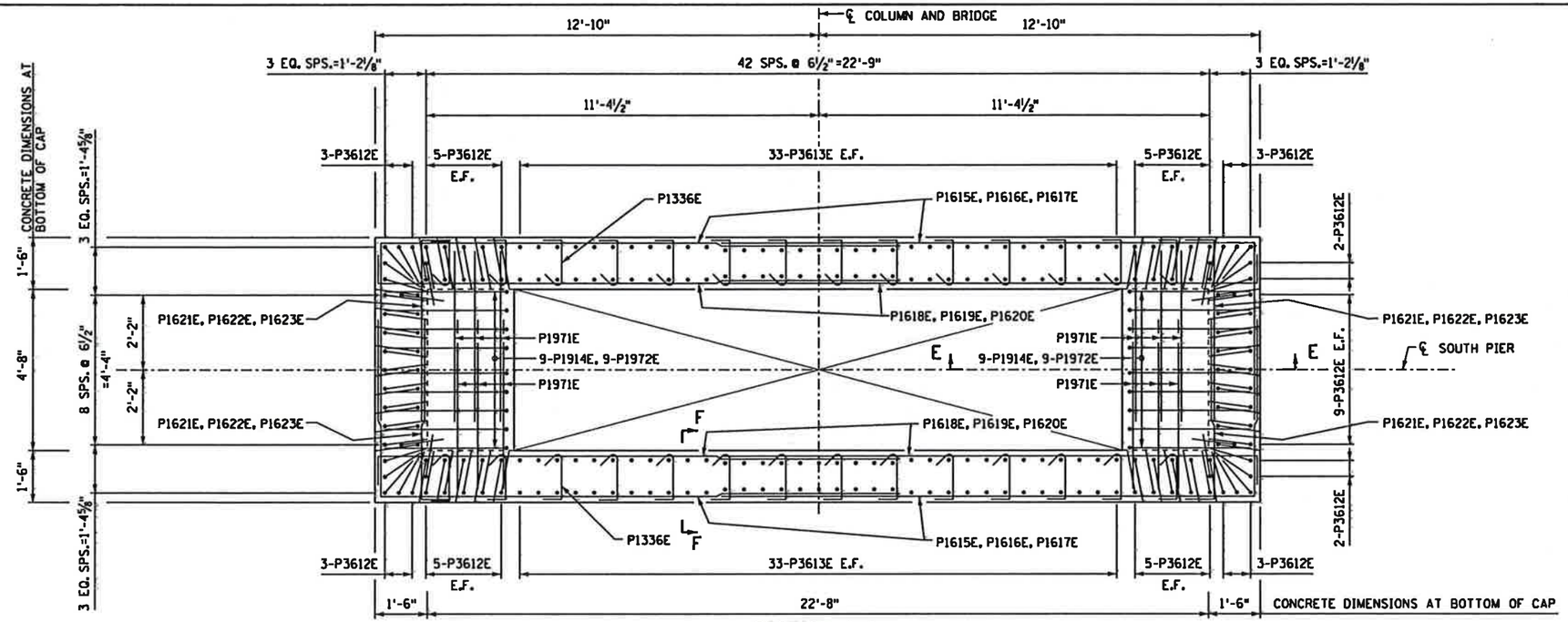

SECTION A-A

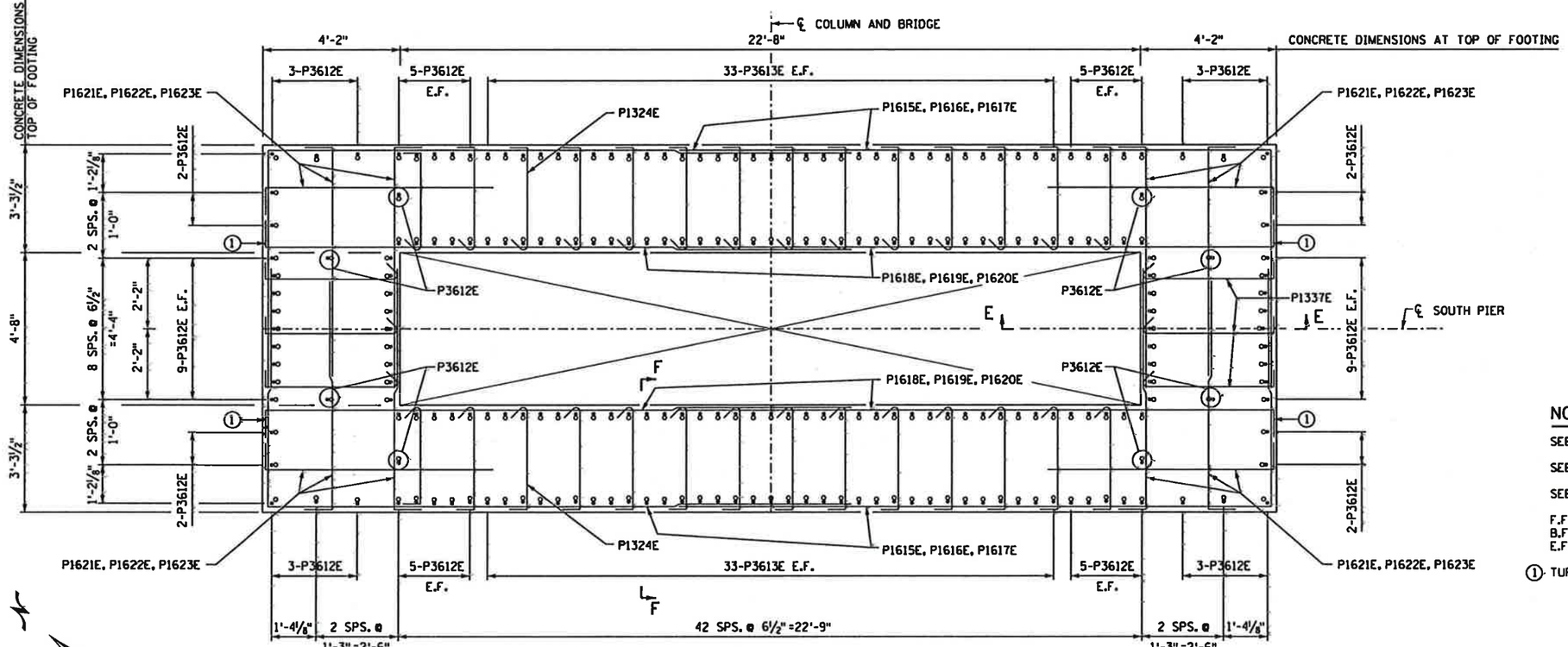

SECTION B-B

NOTES

SEE SHEET 11 FOR BILL OF REINFORCEMENT AND SUMMARY OF QUANTITIES.

SEE SHEET 10 FOR SECTIONS E-E & F-F.

SEE SHEET 7 FOR SECTIONS A-A, B-B LOCATIONS.

F.F.=FRONT FACE
B.F.=BACK FACE
E.F.=EACH FACE

(1) TURN LEG DOWN.

COUNTY PROJECT NO. 102

SEH
3535 VADNAIS CENTER DRIVE
ST PAUL, MN 55110
PHONE (651) 490-2000
FAX (651) 490-2150

I hereby certify that this plan, specification, or report was prepared by me or under my direct supervision and that I am a duly Licensed Professional Engineer under the laws of the state of Minnesota

Signature: Gaylen L. Perkuhn Date: 6-3-2011
Printed Name: GAYLEN L. PERKUHN Reg. No. 15925

TITLE: SOUTH PIER DETAILS

DES: GLP	DR: MAW	APPROVED:	BRIDGE NO
CHK: JAJ	CHK: GLP		6961
SHEET NO 8 OF 17 SHEETS			

10:42:06 AM 6/3/2011 CR 152
s:\AE\B\Bluep\115013\5-dgn\5i-cadd\dgn\radjacket_pier_rebar.dgn

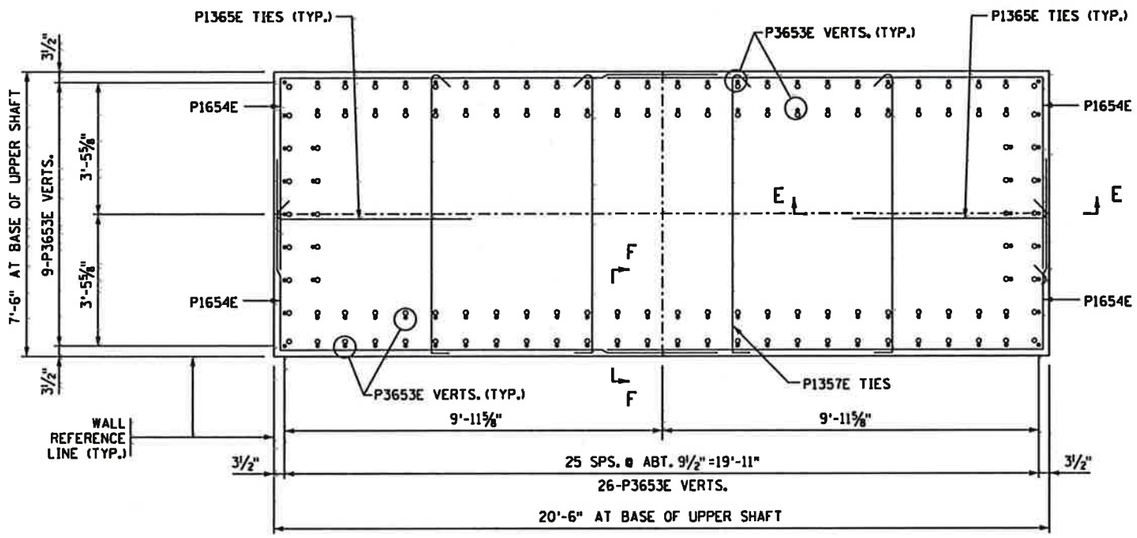

SECTION D-D

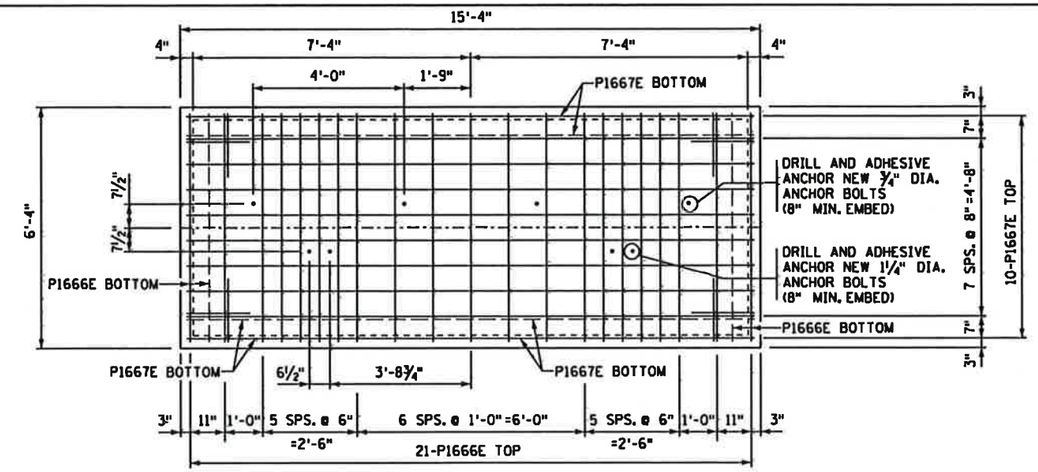

UPPER SHAFT TOP CAP PLAN

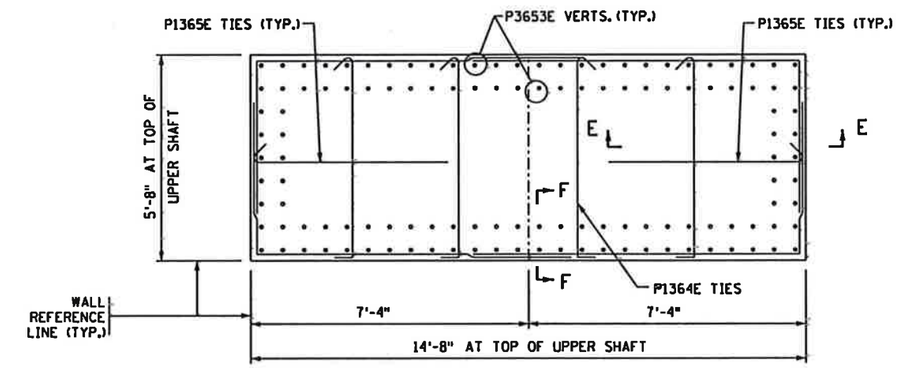

SECTION C-C

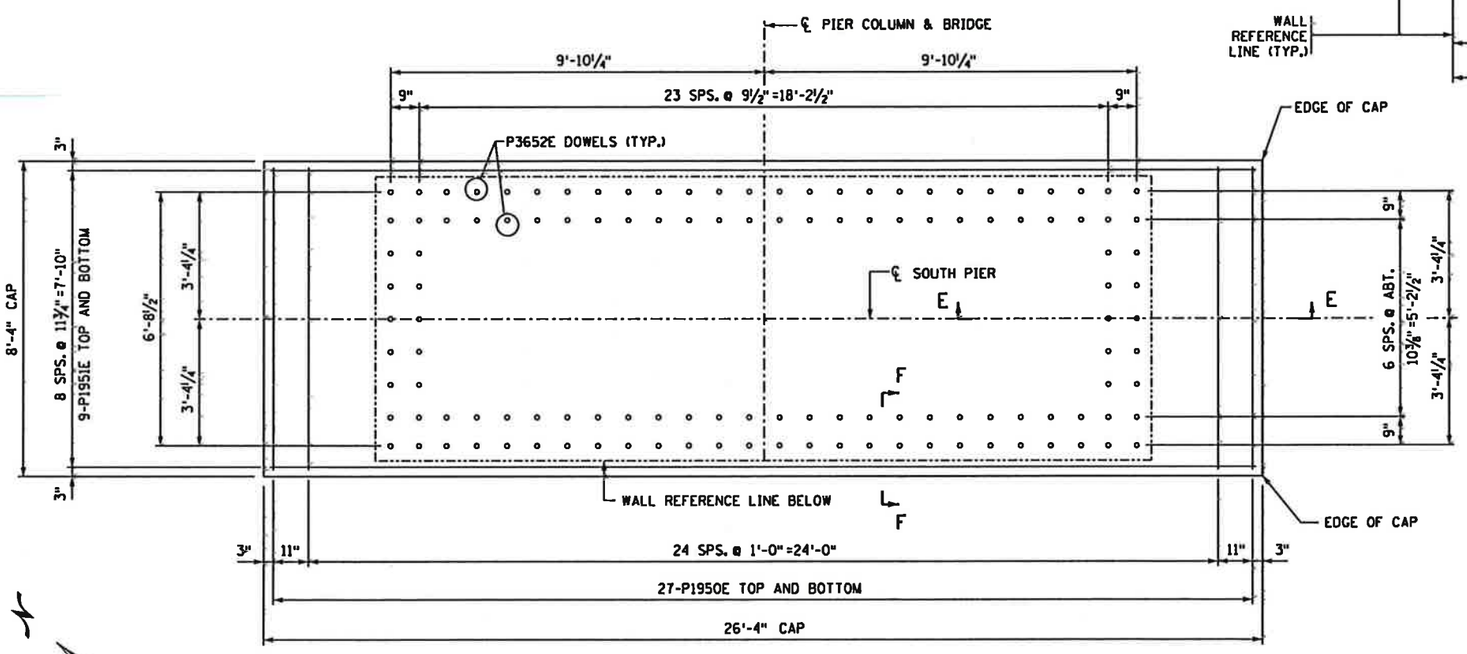

LOWER SHAFT TOP CAP PLAN

NOTES

SEE SHEET 11 FOR BILL OF REINFORCEMENT AND SUMMARY OF QUANTITIES.

SEE SHEET 10 FOR SECTIONS E-E & F-F.

SEE SHEET 7 FOR SECTIONS C-C, D-D LOCATIONS.

F.F.=FRONT FACE
B.F.=BACK FACE
E.F.=EACH FACE

COUNTY PROJECT NO. 102

SEH
3535 VADNAIS CENTER DRIVE
ST PAUL, MN 55110
PHONE (651) 490-2000
FAX (651) 490-2150

I hereby certify that this plan, specification, or report was prepared by me or under my direct supervision and that I am a duly Licensed Professional Engineer under the laws of the State of Minnesota

Signature: Gaylen L. Perkuhn Date: 6-3-2011
Printed Name: GAYLEN L PERKUHN Reg. No. 15925

TITLE: SOUTH PIER DETAILS

DES: GLP	DR: MAW	APPROVED:
CHK: JAJ	CHK: GLP	

SHEET NO 9 OF 17 SHEETS

BRIDGE NO 6961

10:42:08 AM
6/3/2011
CR 152
s:\AE\B\B1usp\115013\5-dsgn\51-cadd\dgn\redjacket_pier_rebar.dgn

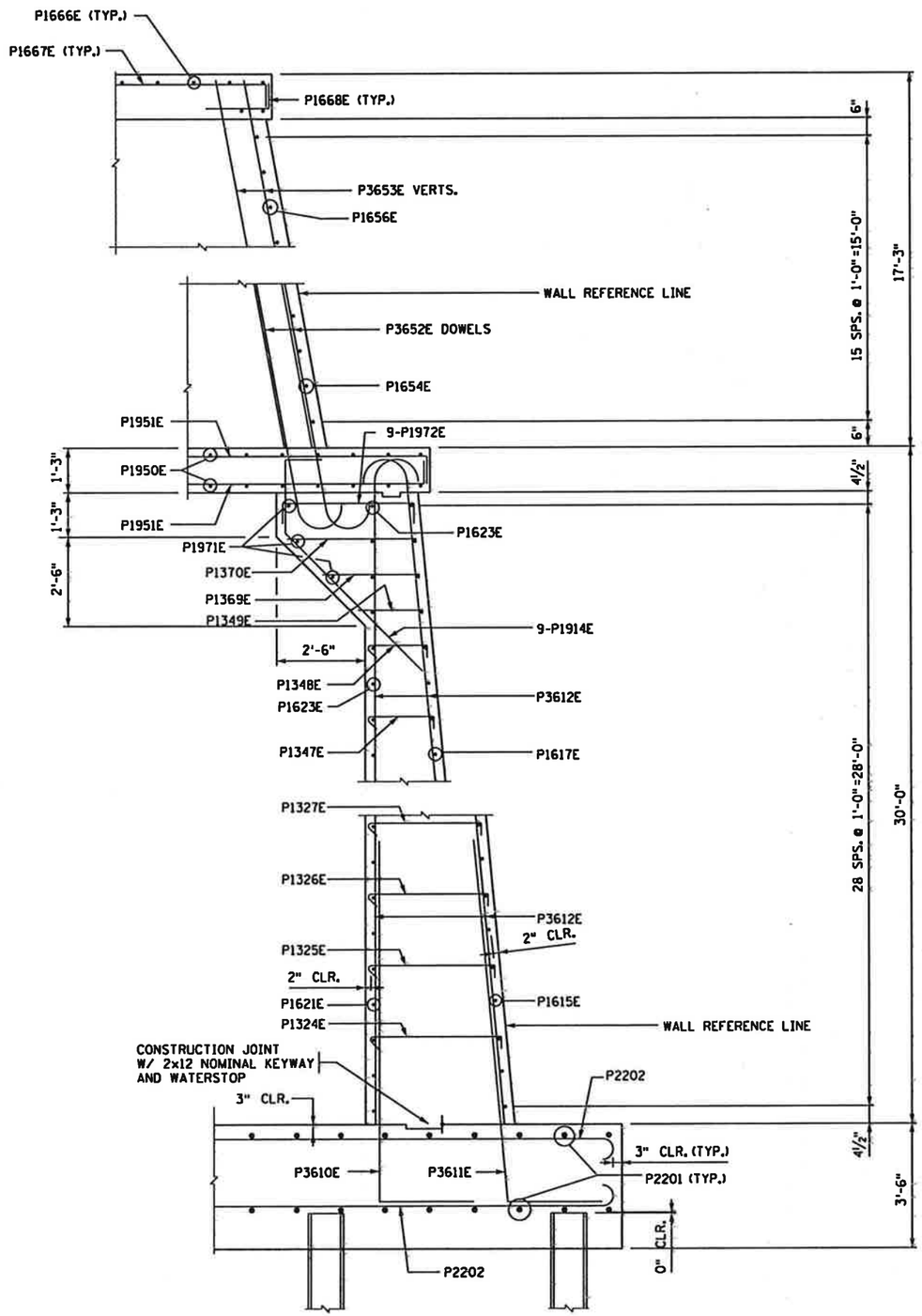

SECTION E-E

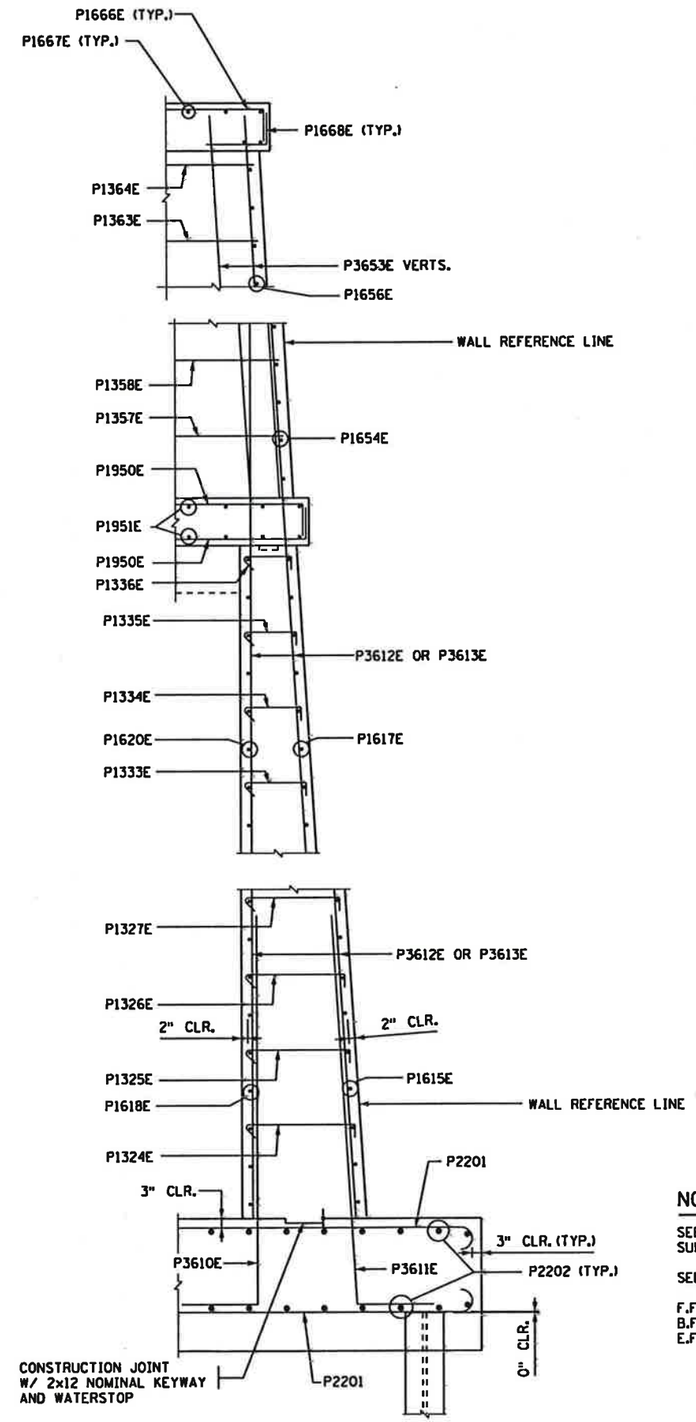

SECTION F-F

NOTES

SEE SHEET 11 FOR BILL OF REINFORCEMENT AND SUMMARY OF QUANTITIES.

SEE SHEETS 8 & 9 FOR SECTION CUT LOCATIONS.

F.F.=FRONT FACE
B.F.=BACK FACE
E.F.=EACH FACE

COUNTY PROJECT NO. 102

SEH
3535 VADNAIS CENTER DRIVE
ST PAUL, MN 55110
PHONE (651) 490-2000
FAX (651) 490-2150

I hereby certify that this plan, specification, or report was prepared by me or under my direct supervision and that I am a duly Licensed Professional Engineer under the laws of the state of Minnesota

Signature: Gaylen L. Perkuhn Date: 6-3-2011
Printed Name: GAYLEN L PERKUHN Reg. No. 15925

TITLE: SOUTH PIER DETAILS

DES: GLP	DR: MAW	APPROVED:
CHK: JAJ	CHK: GLP	

SHEET NO 10 OF 17 SHEETS

BRIDGE NO 6961

s:\AE\B\Bluep\115013\5-dsgn\51-cadd\dgn\redjacket_pier_rebar.dgn CR 152 6/3/2011 10:42:07 AM

BAR MARK	NO. OF BARS	LENGTH	SHAPE	LOCATION
SOUTH PIER EPOXY COATED BARS				
P3610E	112	12'-6"	BENT	VERTICAL DOWEL LOWER SHAFT
P3611E	124	12'-6"	BENT	VERTICAL DOWEL LOWER SHAFT
P3612E	104	31'-4"	BENT	VERTICAL LOWER SHAFT
P3613E	132	38'-1"	STR	VERTICAL LOWER SHAFT
P1914E	18	8'-7"	BENT	VERTICAL LOWER SHAFT
P1615E	40	25'-4"	BENT	HORIZ. LOWER SHAFT
P1616E	40	23'-7"	BENT	HORIZ. LOWER SHAFT
P1617E	36	22'-0"	BENT	HORIZ. LOWER SHAFT
P1618E	40	18'-10"	BENT	HORIZ. LOWER SHAFT
P1619E	40	17'-10"	BENT	HORIZ. LOWER SHAFT
P1620E	36	16'-10"	BENT	HORIZ. LOWER SHAFT
P1621E	120	8'-2"	BENT	HORIZ. LOWER SHAFT
P1622E	120	7'-5"	BENT	HORIZ. LOWER SHAFT
P1623E	108	6'-10"	BENT	HORIZ. LOWER SHAFT
P1324E	28	3'-7"	BENT	HORIZ. TIE LOWER SHAFT
P1325E	28	3'-5"	BENT	HORIZ. TIE LOWER SHAFT
P1326E	28	3'-4"	BENT	HORIZ. TIE LOWER SHAFT
P1327E	28	3'-3"	BENT	HORIZ. TIE LOWER SHAFT
P1328E	28	3'-1"	BENT	HORIZ. TIE LOWER SHAFT
P1329E	28	2'-11"	BENT	HORIZ. TIE LOWER SHAFT
P1330E	28	2'-10"	BENT	HORIZ. TIE LOWER SHAFT
P1331E	28	2'-8"	BENT	HORIZ. TIE LOWER SHAFT
P1332E	28	2'-7"	BENT	HORIZ. TIE LOWER SHAFT
P1333E	28	2'-5"	BENT	HORIZ. TIE LOWER SHAFT
P1334E	28	2'-4"	BENT	HORIZ. TIE LOWER SHAFT
P1335E	28	2'-2"	BENT	HORIZ. TIE LOWER SHAFT
P1336E	24	2'-1"	BENT	HORIZ. TIE LOWER SHAFT
P1337E	6	4'-4"	BENT	HORIZ. TIE LOWER SHAFT
P1338E	6	4'-2"	BENT	HORIZ. TIE LOWER SHAFT
P1339E	6	4'-1"	BENT	HORIZ. TIE LOWER SHAFT
P1340E	6	3'-10"	BENT	HORIZ. TIE LOWER SHAFT
P1341E	6	3'-8"	BENT	HORIZ. TIE LOWER SHAFT
P1342E	6	3'-6"	BENT	HORIZ. TIE LOWER SHAFT
P1343E	6	3'-3"	BENT	HORIZ. TIE LOWER SHAFT
P1344E	6	3'-1"	BENT	HORIZ. TIE LOWER SHAFT
P1345E	6	2'-11"	BENT	HORIZ. TIE LOWER SHAFT
P1346E	6	2'-9"	BENT	HORIZ. TIE LOWER SHAFT
P1347E	6	2'-6"	BENT	HORIZ. TIE LOWER SHAFT
P1348E	6	2'-4"	BENT	HORIZ. TIE LOWER SHAFT
P1349E	6	2'-7"	BENT	HORIZ. TIE LOWER SHAFT
P1950E	54	10'-0"	BENT	LOWER SHAFT TOP CAP
P1951E	18	28'-0"	BENT	LOWER SHAFT TOP CAP
P3652E	124	12'-6"	BENT	VERTICAL DOWEL UPPER SHAFT
P3653E	124	17'-0"	STR	VERTICAL UPPER SHAFT
P1654E	24	16'-8"	BENT	HORIZ. UPPER SHAFT
P1655E	24	15'-0"	BENT	HORIZ. UPPER SHAFT
P1656E	16	13'-8"	BENT	HORIZ. UPPER SHAFT
P1357E	4	7'-9"	BENT	HORIZ. TIE UPPER SHAFT
P1358E	4	7'-7"	BENT	HORIZ. TIE UPPER SHAFT
P1359E	4	7'-3"	BENT	HORIZ. TIE UPPER SHAFT
P1360E	4	7'-1"	BENT	HORIZ. TIE UPPER SHAFT
P1361E	4	6'-11"	BENT	HORIZ. TIE UPPER SHAFT
P1362E	4	5'-8"	BENT	HORIZ. TIE UPPER SHAFT
P1363E	4	5'-6"	BENT	HORIZ. TIE UPPER SHAFT
P1364E	4	5'-3"	BENT	HORIZ. TIE UPPER SHAFT
P1365E	16	5'-6"	BENT	HORIZ. TIE UPPER SHAFT
P1666E	25	7'-8"	BENT	UPPER SHAFT TOP CAP
P1667E	14	16'-8"	BENT	UPPER SHAFT TOP CAP
P1668E	54	2'-6"	BENT	UPPER SHAFT TOP CAP
P1369E	6	3'-6"	BENT	HORIZ. TIE LOWER SHAFT
P1370E	6	4'-5"	BENT	HORIZ. TIE LOWER SHAFT
P1971E	12	7'-0"	BENT	HORIZ. LOWER SHAFT
P1972E	18	5'-8"	BENT	HORIZ. TIE LOWER SHAFT

BAR MARK	NO. OF BARS	LENGTH	SHAPE	LOCATION
SOUTH PIER BLACK BARS				
P2201	68	18'-5"	BENT	FOOTING TRANSV. TOP AND BOTTOM
P2202	34	38'-2"	BENT	FOOTING LONGIT. TOP AND BOTTOM

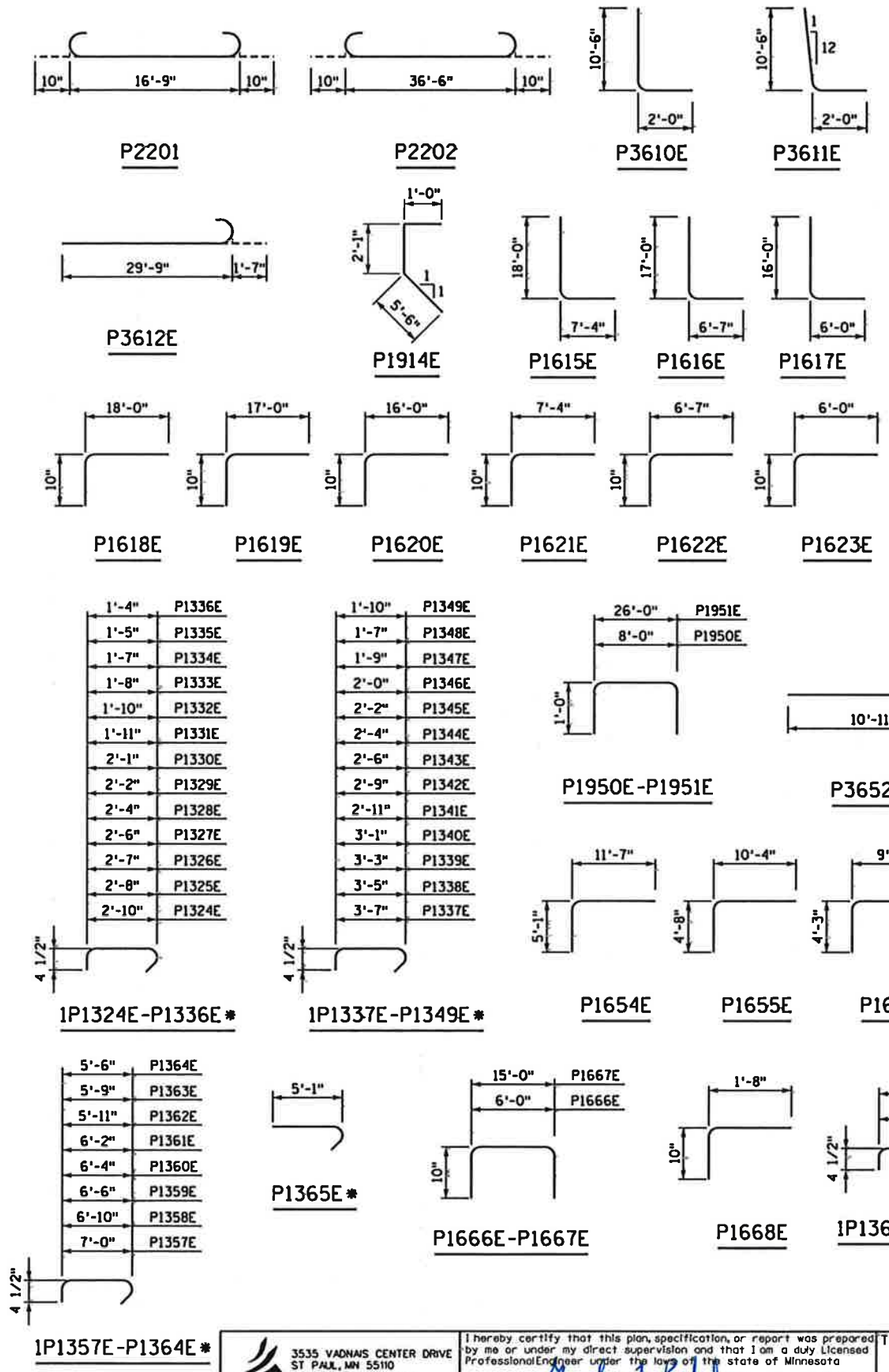

SUMMARY OF QUANTITIES FOR SOUTH PIER

	ITEM	UNIT	QUANTITY
	STRUCTURAL CONCRETE (1A43)	CU YD	83
	STRUCTURAL CONCRETE (3Y43)	CU YD	264
	REINFORCEMENT BARS	POUND	5210
	REINFORCEMENT BARS (EPOXY COATED)	POUND	91650
	ARCHITECTURAL CONCRETE TEXTURE (ROCK FACE)	SQ FT	2314
②	ARCHITECTURAL SURFACE FINISH (MULTI-COLOR)	SQ FT	3090
	ANTI-GRAFFITI COATING	SQ FT	2314
①	STEEL H-PILING DELIVERED 12"	LIN FT	340
①	STEEL H-PILING DRIVEN 12"	LIN FT	340
	STEEL H TEST PILING 25 FT LONG 12"	EACH	1
	STEEL SHEET PILING (PERMANENT)	SQ FT	1519

① DOES NOT INCLUDE TEST PILES.

② ARCHITECTURAL SURFACE FINISH (MULTI-COLOR) TYPE A = 2173 S.F.
ARCHITECTURAL SURFACE FINISH (MULTI-COLOR) TYPE B = 917 S.F.

* BAR USES STANDARD STIRRUP AND TIE HOOKS.

NOTE:
BENT BAR DIMENSIONS GIVEN ARE OUT-TO-OUT. ACTUAL BAR LENGTHS SHALL BE DETERMINED BASED ON DIMENSTIONS SHOWN IN THE BAR BENDING DIAGRAMS. TOTAL BAR LENGTHS SHOWN ARE FOR USE IN COMPUTING REINFORCEMENT BAR WEIGHTS FOR PAYMENT.

COUNTY PROJECT NO. 102

SEH
3535 VADNAIS CENTER DRIVE
ST PAUL, MN 55110
PHONE (651) 490-2000
FAX (651) 490-2150

I hereby certify that this plan, specification, or report was prepared by me or under my direct supervision and that I am a duty Licensed Professional Engineer under the laws of the state of Minnesota
Signature: Gaylen L. Perkuhn Date: 6-3-2011
Printed Name: GAYLEN L. PERKUHN Reg. No. 15925

TITLE: SOUTH PIER BILL OF REINFORCEMENT & SUMMARY OF QUANTITIES

DES: GLP	DR: MAW	APPROVED:
CHK: JAJ	CHK: GLP	

SHEET NO 11 OF 17 SHEETS

BRIDGE NO 6961

10:42:09 AM
6/3/2011
CR 152
s:\AE\B\Bluep\115013\5-dgn\51-oddd\dgn\redlocket_plrb.dgn

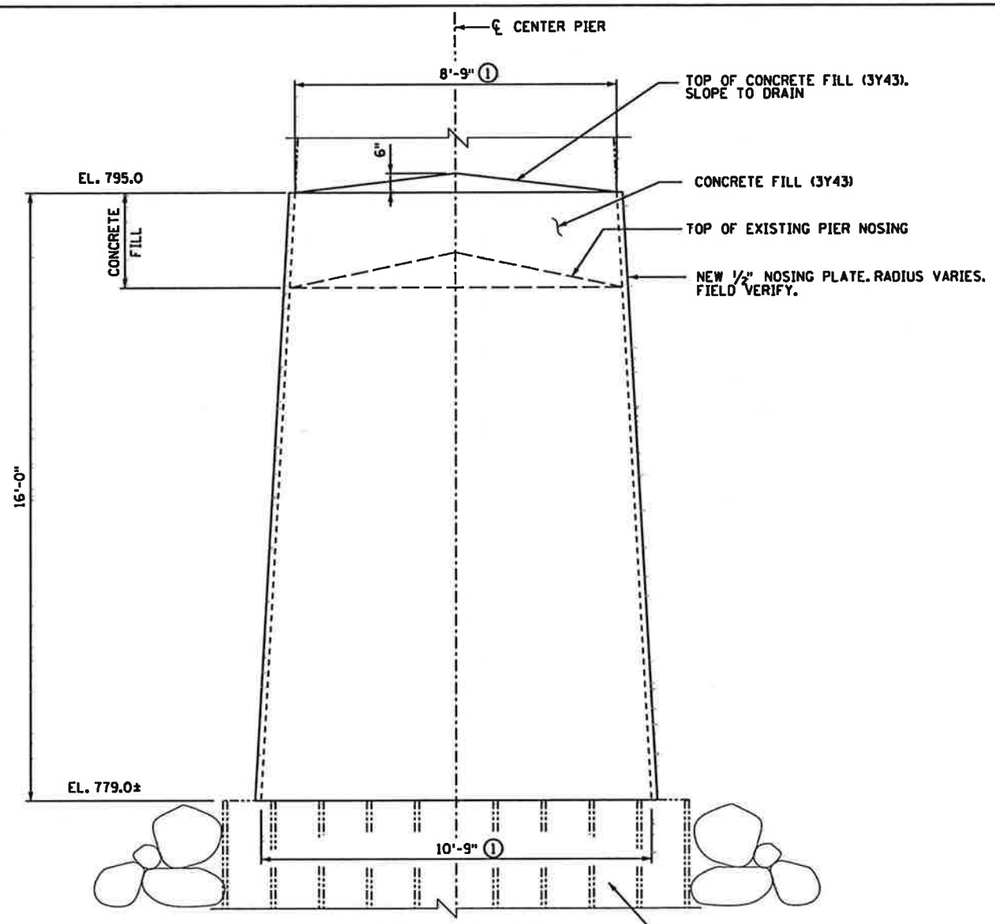

FRONT ELEVATION
CENTER PIER

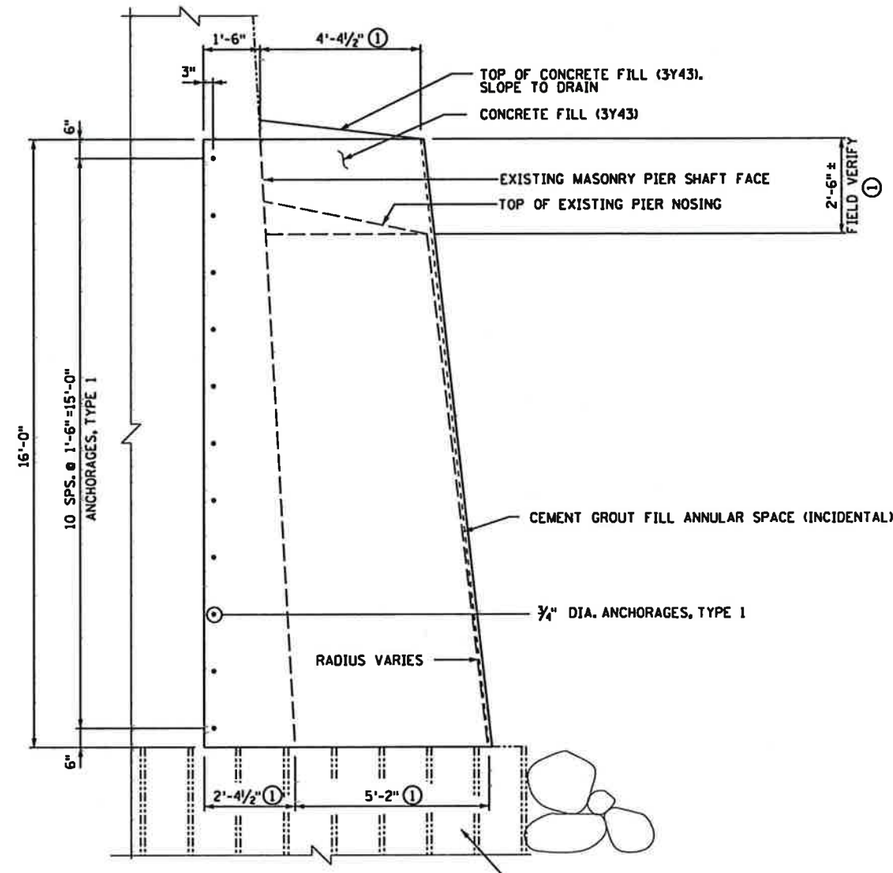

SIDE ELEVATION
CENTER PIER

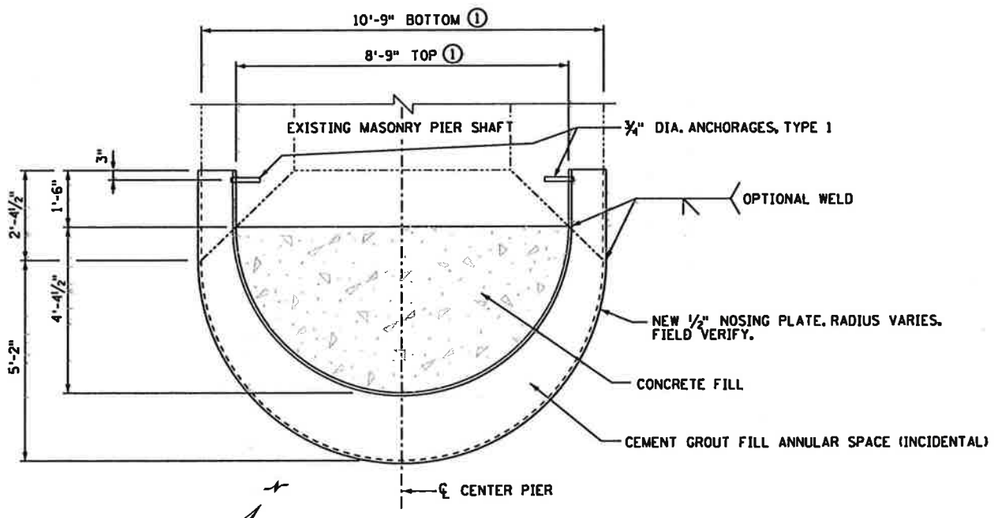

PLAN SECTION

SUMMARY OF QUANTITIES

ITEM	UNIT	QUANTITY
STRUCTURE CONCRETE (3Y43)	CU. YD.	3
STRUCTURAL STEEL (3309)	POUND	6314.5
ANCHORAGES, TYPE 1	EACH	22

NOTES:

ALL GROOVE WELDS SHALL BE FULL DEPTH.

STEEL SHAPES, PLATES, FLAT BARS AND ANCHORAGES SHALL COMPLY WITH Mn/DOT SPEC. 3309.

GALVANIZE BOLTS, NUTS, WASHERS, AS PER Mn/DOT SPEC. 3392. PAINT ALL STRUCTURAL SHAPES AFTER FABRICATION WITH ORGANIC ZINC RICH PAINT SYSTEM IN ACCORDANCE WITH MnDOT 2478, COLOR BLACK.

ITEMS SHOWN SHALL BE INCLUDED IN THE QUANTITY FOR STRUCTURAL STEEL (3309) BY THE POUND.

PAINTING IS INCIDENTAL TO STRUCTURAL STEEL (3309).

CONTRACTOR TO FIELD VERIFY ALL DIMENSIONS.

FOR CEMENT GROUT, SEE SPECIAL PROVISIONS.

FOR ANCHORAGES, TYPE 1, SEE SPECIAL PROVISIONS.

① CONTRACTOR TO VERIFY DIMENSIONS BEFORE FABRICATION OF ARMOUR PLATE.

COUNTY PROJECT NO. 102

SEH
3535 VADNAIS CENTER DRIVE
ST PAUL, MN 55110
PHONE (651) 490-2000
FAX (651) 490-2150

I hereby certify that this plan, specification, or report was prepared by me or under my direct supervision and that I am a duly Licensed Professional Engineer under the laws of the state of Minnesota
Signature: Gaylen L. Perkhuhn Date: 6-3-2011
Printed Name: GAYLEN L PERKUHN Reg. No. 15925

TITLE: CENTER PIER NOSE ARMOUR

DES: GLP	DR: MAW	APPROVED:	BRIDGE NO 6961
CHK: JAJ	CHK: GLP		
SHEET NO 12 OF 17 SHEETS			

10:42:11 AM 6/3/2011 CR 152
s:\cad\b\bluebu\115013\5-dsgn\51-cadd\dgn\redjacket_sa4.dgn

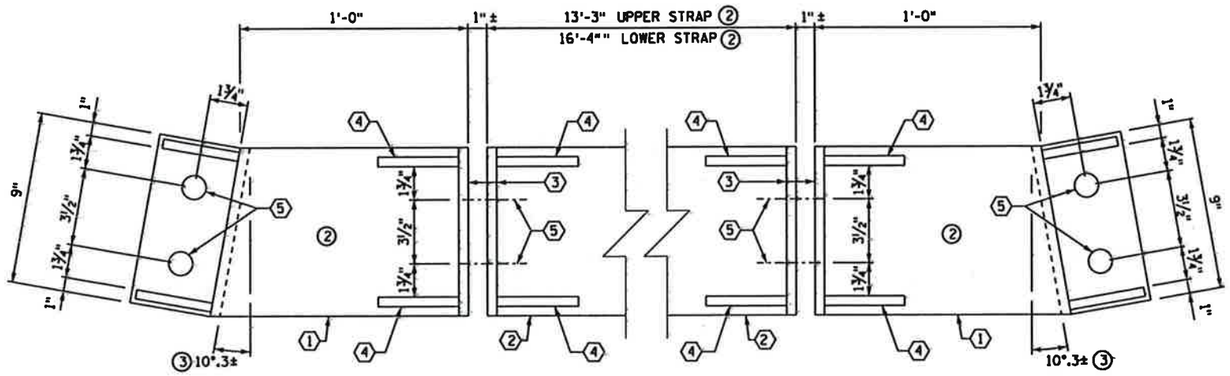

ELEVATION VIEW

AT PEIR SIDES

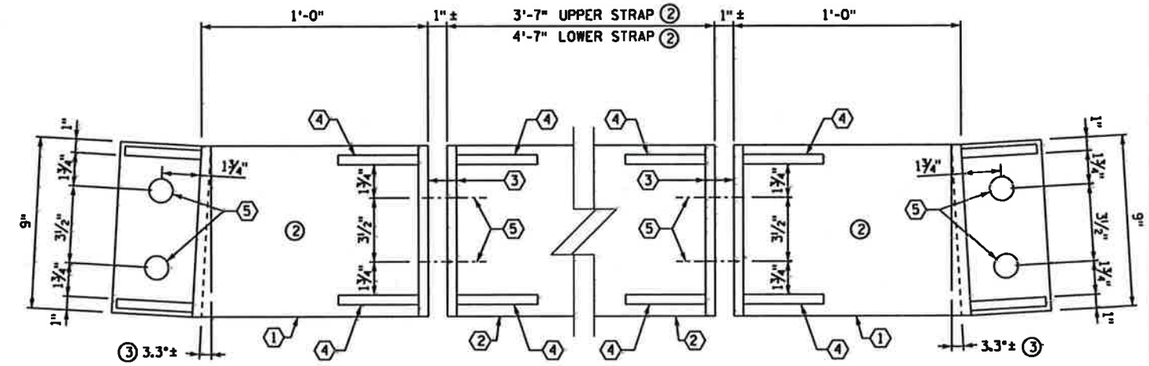

ELEVATION VIEW

AT PEIR ENDS

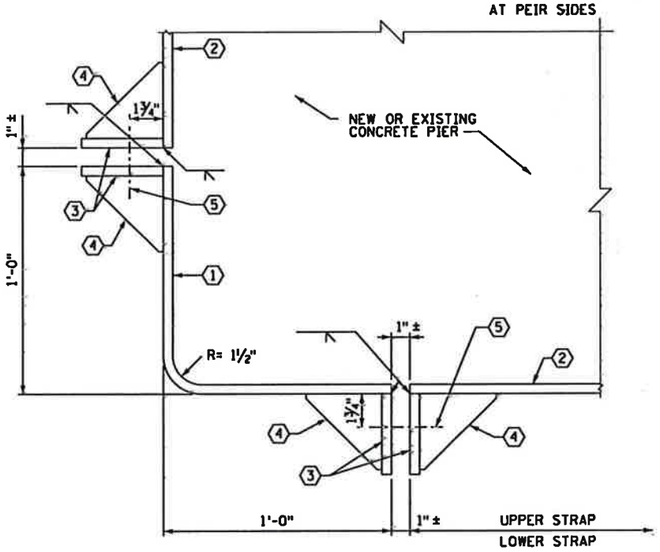

PLAN VIEW OF CORNER

PLATE NOTES:

1. BENT CORNER PL ½" × 9"
2. STRAIGHT PL ½" × 9"
3. PL ½" × 4¼" × 9"
4. ½" GUSSET PLATE
5. 1⅜" HOLES FOR 1¼" DIA. A325 BOLTS

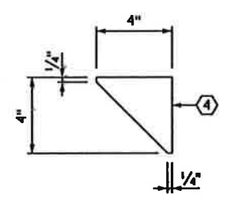

TYPICAL GUSSET PLATE

SUMMARY OF QUANTITIES

(FOR 3 PIERS)

	ITEM	UNIT	QUANTITY
①	STRUCTURAL STEEL (3309)	POUND	5285.4

① INCLUDED IN PRICE BID FOR ITEM "STRUCTURAL STEEL (3309)"

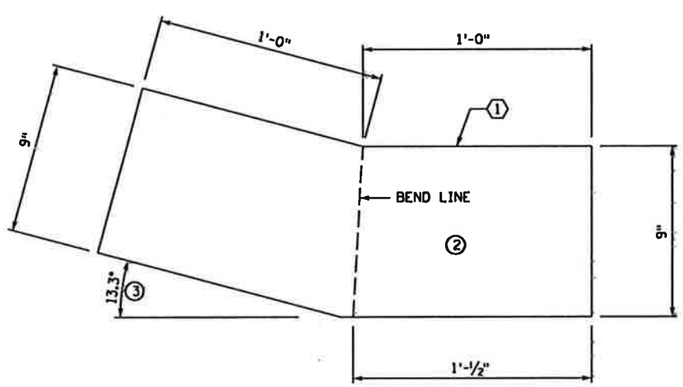

CORNER PLATE

PLAN VIEW PRIOR TO BENDING

NOTES:

ALL FILLET AND BEVEL WELDS SHALL BE ¼".

MAXIMUM BOLT TENSION = 20 KIPS PER BOLT.

STEEL SHAPES, PLATES, FLAT BARS AND ANCHORAGES SHALL COMPLY WITH Mn/DOT SPEC. 3309.

BOLTS AND NUTS SHALL BE A325.

ITEMS SHOWN SHALL BE INCLUDED IN THE QUANTITY FOR STRUCTURAL STEEL (3309) BY THE POUND.

GALVANIZE BOLTS, NUTS, WASHERS, AS PER Mn/DOT SPEC. 3392. PAINT ALL STRUCTURAL SHAPES AFTER FABRICATION WITH ORGANIC ZINC RICH PAINT SYSTEM IN ACCORDANCE WITH MnDOT 2478, COLOR BLACK.

PAINTING IS INCIDENTAL TO STRUCTURAL STEEL (3309).

② CONTRACTOR TO FIELD VERIFY DIMENSIONS.

③ VERIFY WITH SLOPE OF PIER FACE.

COUNTY PROJECT NO. 102

SEH
3535 VADNAIS CENTER DRIVE
ST PAUL, MN 55110
PHONE (651) 490-2000
FAX (651) 490-2150

I hereby certify that this plan, specification, or report was prepared by me or under my direct supervision and that I am a duly Licensed Professional Engineer under the laws of the state of Minnesota

Signature: Gaylen L. Perkuhn Date: 6-3-2011

Printed Name: GAYLEN L PERKUHN Reg. No. 15925

TITLE: COLUMN BAND DETAILS

DES: GLP	DR: MAW	APPROVED:
CHK: JAJ	CHK: GLP	

SHEET NO 13 OF 17 SHEETS

BRIDGE NO 6961

10:42:12 AM 6/3/2011 CR 152
s:\AE\B\B1uap\115013\5-dgn\51-cadd\dgn\redjacket_ssl.dgn

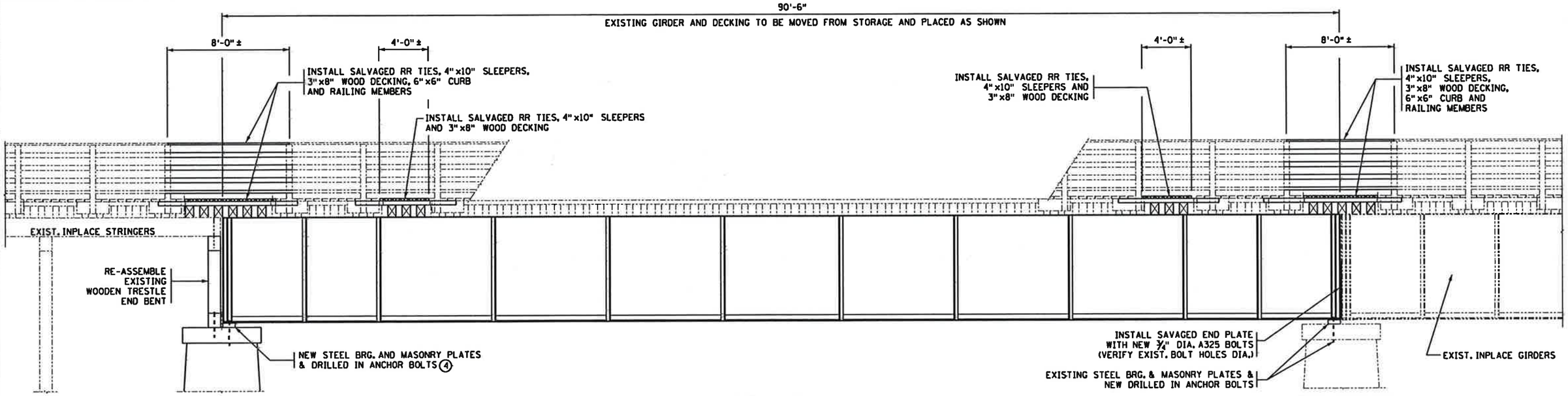

ELEVATION

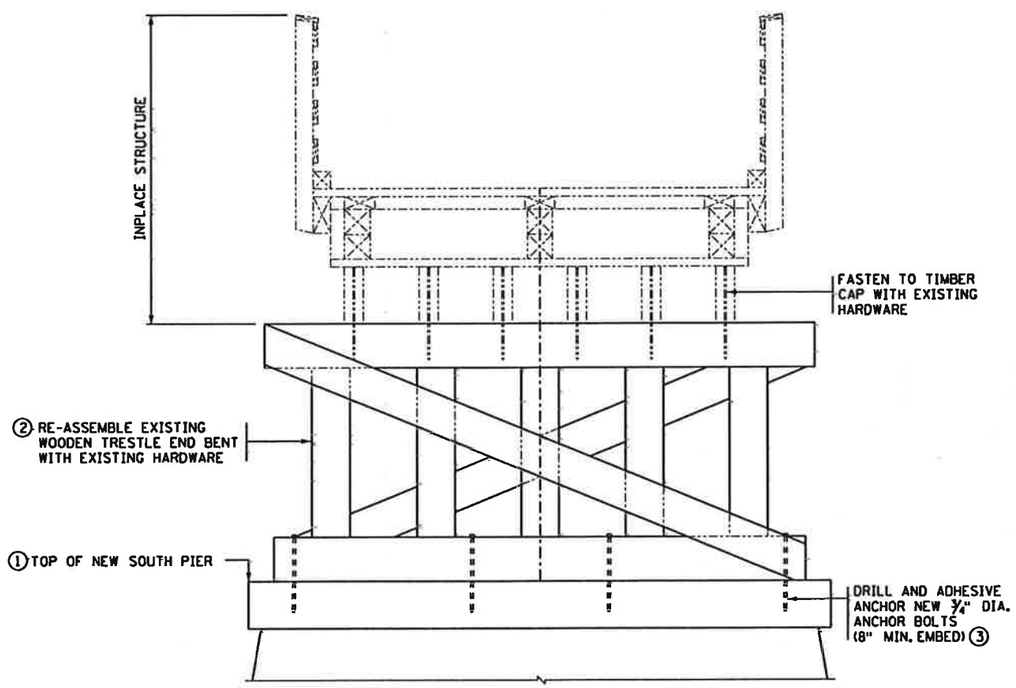

EXISTING TRESTLE DETAIL

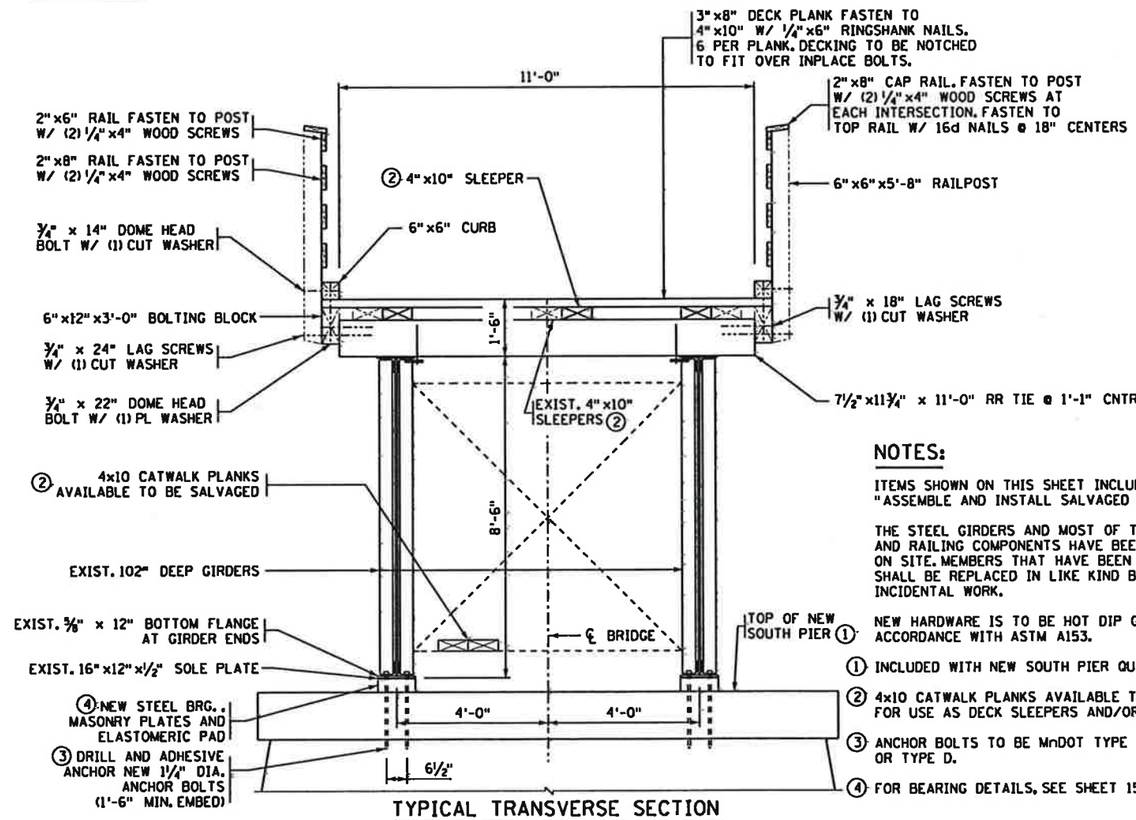

TYPICAL TRANSVERSE SECTION

NOTES:

ITEMS SHOWN ON THIS SHEET INCLUDED UNDER ITEM "ASSEMBLE AND INSTALL SALVAGED BRIDGE".

THE STEEL GIRDERS AND MOST OF THE TIMBER TRESTLE, DECK AND RAILING COMPONENTS HAVE BEEN SALVAGED AND STORED ON SITE. MEMBERS THAT HAVE BEEN DAMAGED, CUT OR LOST SHALL BE REPLACED IN LIKE KIND BY THE CONTRACTOR AS INCIDENTAL WORK.

NEW HARDWARE IS TO BE HOT DIP GALVANIZED IN ACCORDANCE WITH ASTM A153.

(1) INCLUDED WITH NEW SOUTH PIER QUANTITIES.

(2) 4x10 CATWALK PLANKS AVAILABLE TO BE SALVAGED FOR USE AS DECK SLEEPERS AND/OR TRESLE CROSS FRAME.

(3) ANCHOR BOLTS TO BE MnDOT TYPE B (HOT DIP GALVANIZED) OR TYPE D.

(4) FOR BEARING DETAILS, SEE SHEET 15.

COUNTY PROJECT NO. 102

SEH
3535 VADNAIS CENTER DRIVE
ST PAUL, MN 55110
PHONE (651) 490-2000
FAX (651) 490-2150

I hereby certify that this plan, specification, or report was prepared by me or under my direct supervision and that I am a duly Licensed Professional Engineer under the laws of the state of Minnesota

Signature: Gaylen L. Perkuhn Date: 6-3-2011

Printed Name: GAYLEN L PERKUHN Reg. No. 15925

TITLE: SUPERSTRUCTURE AND BEARING DETAILS

DES: GLP	DR: MAW	APPROVED:	BRIDGE NO
CHK: JAJ	CHK: GLP		6961

SHEET NO 14 OF 17 SHEETS

s:\AE\B\Bluep\115013\5-dsgn\51-cadd\dgn\redjacket_ss2.dgn
CR 152 6/3/2011
10142113 AW

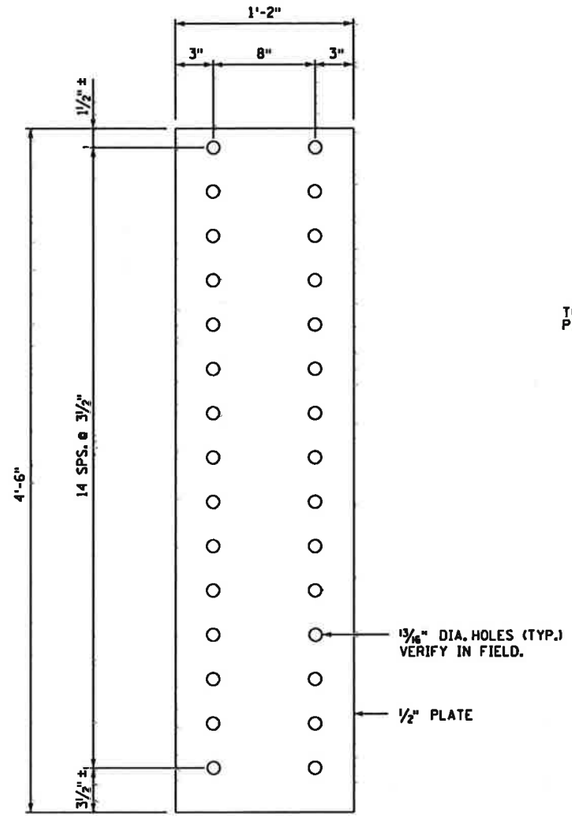

NOTE:
THESE TWO PLATES WERE SALVAGED AND ARE AVAILABLE ON THE CENTER CAP.
NEW ¾" DIA. A325 BOLTS WILL BE REQUIRED.

END PLATE AT CENTER PIER

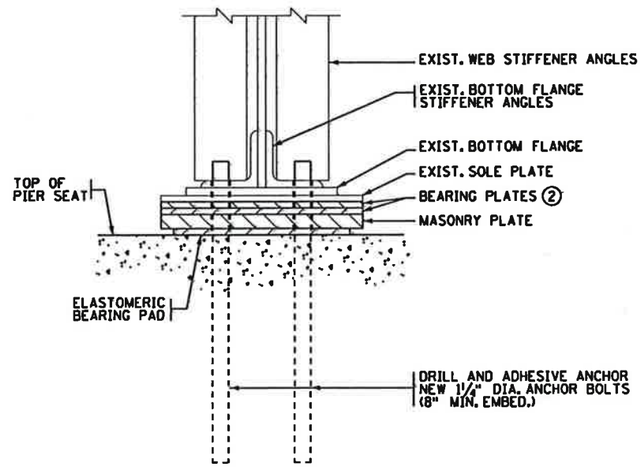

SECTION X-X

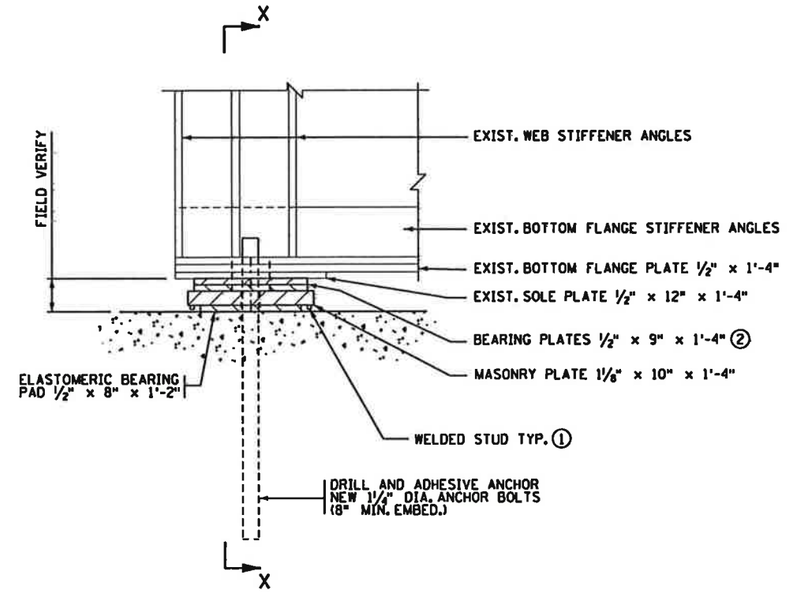

SIDE ELEVATION

EXPANSION PIER

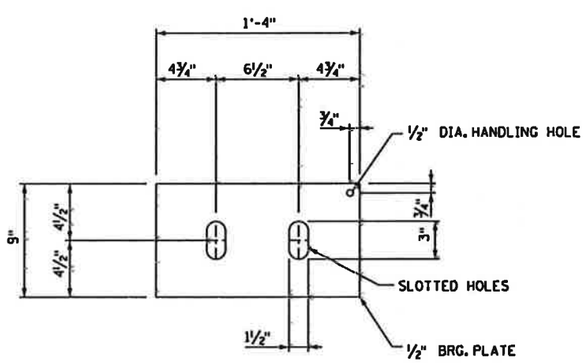

NEW BEARING PLATE ②

4 REQUIRED

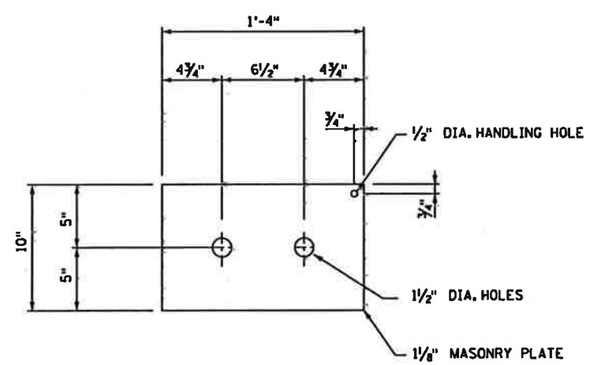

NEW MASONRY PLATE

2 REQUIRED

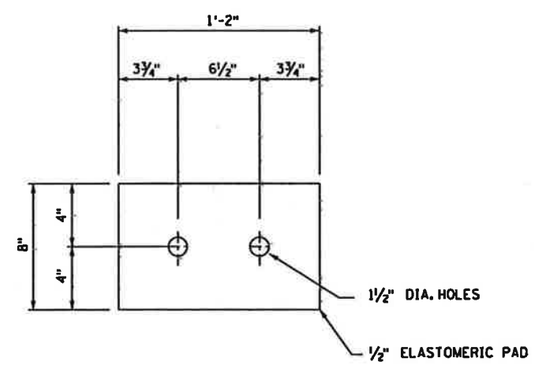

NEW ELASTOMERIC BEARING PAD

2 REQUIRED

NOTES:

ELASTOMERIC MATERIALS AND PAD CONSTRUCTION SHALL COMPLY WITH Mn/DOT SPEC. 3741.

ALL STEEL PLATES SHALL COMPLY WITH Mn/DOT SPEC. 3309.

GALVANIZE STRUCTURAL STEEL BEARING ASSEMBLY AFTER FABRICATION PER Mn/DOT SPEC. 3394, EXCEPT AS NOTED.

PAYMENT FOR BEARING ASSEMBLY SHALL INCLUDE ALL ITEMS ON THIS SHEET.

① 5/16" DIA. x 3/8" KNOCK-OFF WELD STUDS INSTALLED ON BEARING PLATE AROUND PERIMETER OF BEARING PAD. CENTERLINE STUD TO EDGE OF PAD DIMENSION = 1/2 ". MAX. STUD SPACING = 4", AND MAX. SPACING TO PAD CORNER = 2".

② NUMBER OF BEARING PLATES DEPENDS ON SURVEYED ELEVATIONS. 2 PLATES REQUIRED FOR EACH OF 2 BEARING LOCATIONS (4 TOTAL). SEE SPECIAL PROVISIONS FOR "CONSTRUCTION STAKING".

COUNTY PROJECT NO. 102

SEH
3535 VADNAIS CENTER DRIVE
ST PAUL, MN 55110
PHONE (651) 490-2000
FAX (651) 490-2150

I hereby certify that this plan, specification, or report was prepared by me or under my direct supervision and that I am a duly Licensed Professional Engineer under the laws of the state of Minnesota
Signature: Gaylen L. Perkuhn Date: 6-3-2011
Printed Name: GAYLEN L. PERKUHN Reg. No. 15925

TITLE: SUPERSTRUCTURE AND BEARING DETAILS

DES: GLP	DR: MAW	APPROVED:	BRIDGE NO
CHK: JAJ	CHK: GLP		6961
SHEET NO 15 OF 17 SHEETS			

10:42:15 AM
6/3/2011
CR 152
s:\se\b\bluep\115013\5-dgn\51-cadd\dgn\redjacket_ss3.dgn

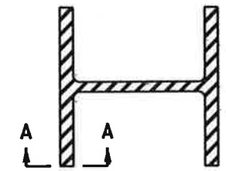

SECTION AT JOINT

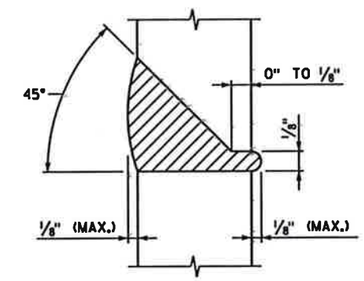

SECTION A-A

100% BUTT WELDED PILE SPLICE

NOTES:

CELLULOSIC TYPE ELECTRODES E-6010 OR E-6011 SHALL BE USED FOR 100% BUTT WELDED SPLICES.

ELECTRODES WHICH HAVE BECOME WET, SOILED OR DAMAGED SHALL NOT BE USED.

WELDING SHALL NOT BE DONE WHEN THE AMBIENT TEMPERATURE IS LOWER THAN 0° F. OR WHEN THE PILE IS WET OR EXPOSED TO FALLING RAIN OR SNOW. WHEN THE PILE METAL TEMPERATURE IS BELOW 32° F., THE PILE METAL IN THE AREA OF THE WELD SHALL BE HEATED TO A MINIMUM TEMPERATURE OF 70° F. AND MAINTAINED AT THIS TEMPERATURE DURING WELDING.

APPROVED: NOVEMBER 22, 2002

STATE BRIDGE ENGINEER

STATE OF MINNESOTA
DEPARTMENT OF TRANSPORTATION

PILE SPLICE
(STEEL H BEARING PILES 10" TO 14")

REVISION

DETAIL NO. B202

COUNTY PROJECT NO. 102

SEH
3535 VADNAIS CENTER DRIVE
ST PAUL, MN 55110
PHONE (651) 490-2000
FAX (651) 490-2150

I hereby certify that this plan, specification, or report was prepared by me or under my direct supervision and that I am a duly Licensed Professional Engineer under the laws of the state of Minnesota

Signature: Gaylen L. Perkuhn Date: 6-3-2011

Printed Name: GAYLEN L. PERKUHN Reg. No. 15925

TITLE: B-DETAILS

DES: GLP	DR: MAW	APPROVED:	BRIDGE NO 6961
CHK: JAJ	CHK: GLP		
SHEET NO 16 OF 17 SHEETS			

10:42:16 AM
6/3/2011
CR 152
s:\oe\b\bluep\115013\5-dgn\51-cadd\dgn\redjacket.dtl.dgn

CONCRETE WEARING COURSE

☐ LOW SLUMP

☐ OTHER _____
TYPE OR MANUFACTURER

EXPANSION JOINTS

JOINT MANUFACTURER

MANUFACTURER'S IDENTIFICATION _____
MFR'S No. AND/OR LETTER DESIGNATION FOR JOINT USED

GLAND MANUFACTURER _____
NAME AND ADDRESS (CITY, STATE)

SIZE OF GLAND _____

MANUFACTURER'S IDENTIFICATION _____
MFR'S No. AND/OR LETTER DESIGNATION FOR GLAND USED

ELASTOMERIC BEARING PADS

PAD MANUFACTURER _____
NAME AND ADDRESS (CITY, STATE)

SPECIAL SURFACE FINISH

SYSTEM: _____ COLOR: _____

FINISHING ROADWAY FACES OF BARRIER RAILING

TYPE: _____ COLOR: _____

ANTI-GRAFFITI COATING

MANUFACTURER _____
NAME AND ADDRESS (CITY, STATE)

PRODUCT NAME: _____ LOCATION: _____

PAINT SYSTEM

Mn/DOT SPECIFICATION NUMBER _____
2478 OR 2479 OR OTHER

MANUFACTURER _____
NAME AND ADDRESS (CITY, STATE)

PRIME COAT _____
Mn/DOT MATERIAL SPECIFICATION NUMBER

INTERMEDIATE COAT _____
Mn/DOT MATERIAL SPECIFICATION NUMBER

FINISH COAT _____ _____
Mn/DOT MATERIAL SPECIFICATION NUMBER COLOR

PLAN QUALITY

RATE 1 (AGREE), 2 (NEUTRAL), OR 3 (DISAGREE, PLEASE COMMENT BELOW)

DIMENSIONING AND DETAILING ADEQUATELY DESCRIBED REQUIRED CONSTRUCTION. _____

BAR LISTS AND QUANTITIES WERE TYPICALLY COMPLETE AND FREE OF ERRORS. _____

SCALE OF DRAWINGS AND OVERALL LEGIBILITY OF LINES AND TEXT WAS GOOD. _____

(SB) SPECIAL PROVISIONS ADEQUATELY DESCRIBED SPECIAL WORK AND PAYMENT. _____

COMMENTS: _____

NUMBER OF BRIDGE SUPPLEMENTAL AGREEMENTS: _____ COST: $ _____

LIST SIGNIFICANT ERRORS OR OMISSIONS IN PLAN DETAILS OR PAY QUANTITIES IN THE SPACE PROVIDED AT RIGHT.

BRIDGE REMOVAL / BRIDGE OPENING

NUMBER OF AND DATE OLD BRIDGE WAS REMOVED (IF APPLICABLE):

BRIDGE NUMBER _____ DATE REMOVED _____

DATE NEW BRIDGE WAS OPENED TO TRAFFIC _____

NOTIFY THE BRIDGE OFFICE BRIDGE MANAGEMENT UNIT WITH THIS INFORMATION AS SOON AS POSSIBLE. (651) 366-4557

OTHER ITEMS ①

① UTILITIES ADDED DURING CONSTRUCTION AND SPECIALTY ITEMS.

FINAL QUANTITIES ENTERED ON SCHEDULE OF QUANTITIES: YES ☐ NO ☐

SUMMARY OF SIGNIFICANT AS-BUILT CHANGES

THE AS-BUILT INFORMATION WAS ADDED TO THE PLAN BY:

_____ _____
INSPECTOR(S) SIGNATURE DATE

CHECKED BY: _____ _____
PROJECT ENGINEER/SUPERVISOR SIGNATURE DATE

AT THE TIME OF THE FINAL, THIS COMPLETED AS-BUILT BRIDGE DATA SHEET MUST BE SUBMITTED TO THE BRIDGE OFFICE - ATTN: REGIONAL CONSTRUCTION ENGINEER (MS610).

REVISION: 10-28-2008

APPROVED: SEPTEMBER 26, 2003

STATE BRIDGE ENGINEER

AS-BUILT DETAILS
(AS NEEDED)

COUNTY PROJECT NO. 102

TITLE: AS-BUILT BRIDGE DATA

DES: DR: CHK: CHK:

SHEET NO. 17 OF 17 SHEETS

APPROVED:

FIG. 5-397.900

BRIDGE NO. 6961

10:42:17 AM 6/3/2011 CR 152 s:\ce\b\bridge\115013\5-dgn\51-cadd\dgn\fig7900a.dgn