CURVE NO. 1 DATA
℄ EB TH 14 (EBTH14)
P.I. STA. 305+68.21
X=588997.649
Y=219033.569
Δ = 21°-04'-15"
D = 1°-00'-00"
T = 1065.58'
L = 2107.09'
R = 5729.58'
P.C. STA. 295+02.63
X=587932.134
Y=219021.770
P.T. STA. 316+09.72
X=589996.162
Y=218661.503

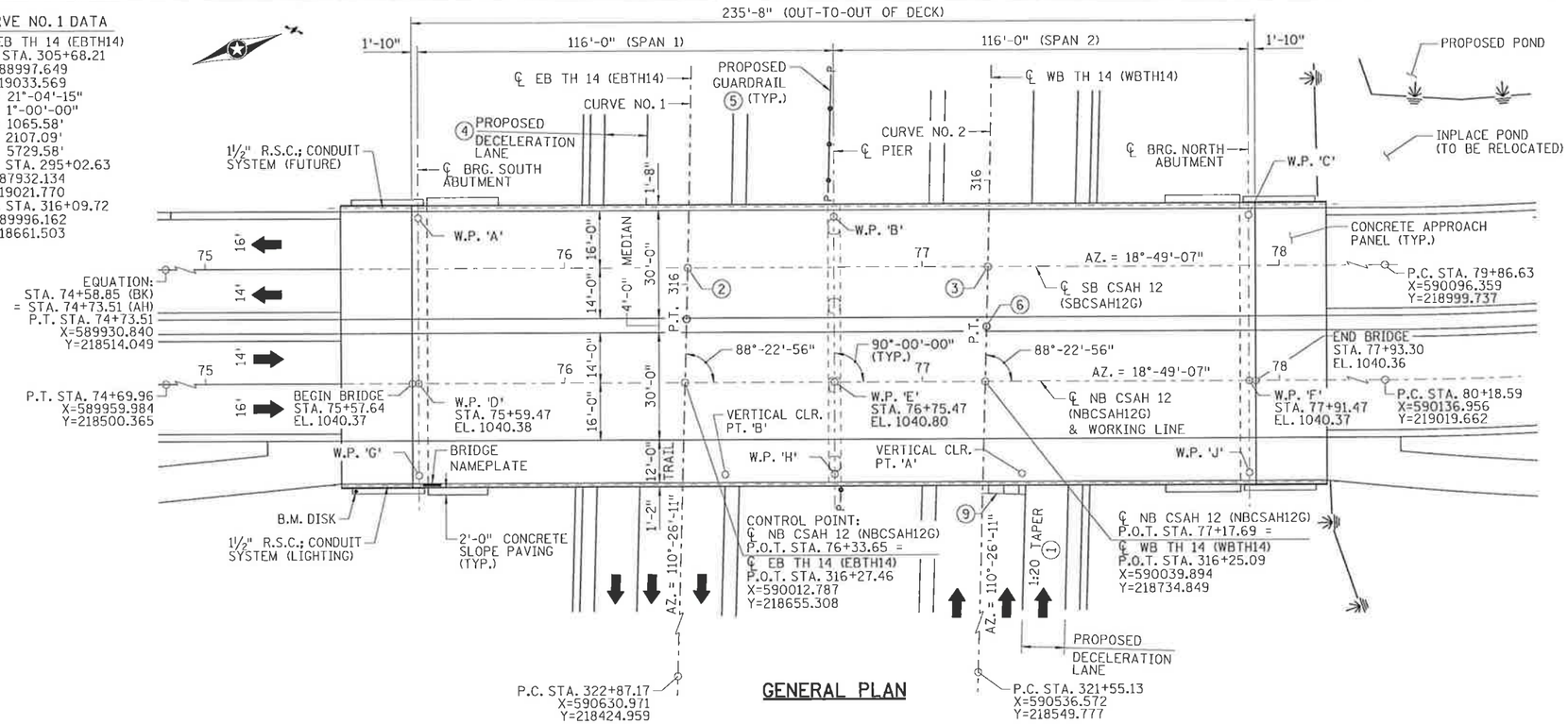

GENERAL PLAN

CURVE NO. 2 DATA
℄ WB TH 14 (WBTH14)
P.I. STA. 305+83.83
X=589012.340
Y=219117.737
Δ = 21°-04'-15"
D = 0°-59'-07"
T = 1081.20'
L = 2137.98'
R = 5813.58'
P.C. STA. 295+02.63
X=587931.204
Y=219105.765
P.T. STA. 316+40.61
X=590025.492
Y=218740.216

DESIGN DATA

2007 AND CURRENT INTERIM AASHTO LRFD BRIDGE DESIGN SPECIFICATIONS

LOAD AND RESISTANCE FACTOR DESIGN METHOD

HL 93 LIVE LOAD

DEAD LOAD INCLUDES 20 psf ALLOWANCE FOR FUTURE WEARING COURSE MODIFICATIONS

MATERIAL DESIGN PROPERTIES:
REINFORCED CONCRETE:
f'c = 4000 psi n = 8
fy = 60000 psi REINFORCEMENT
PRESTRESSED CONCRETE:
f'c = 8100 psi n = 1
f'pu = 270000 psi LOW RELAXATION STRANDS

DESIGN SPEED:
OVER = 30 mph UNDER = 70 mph

APPROXIMATE DECK AREA 18578 ft^2.

2030 PROJECTED TRAFFIC VOLUMES:
A.D.T. ROADWAY OVER - 21,500
A.D.T. ROADWAY UNDER - 18,500-22,500

BRIDGE OPERATING RATING HS40.0

NOTES:

(1) 1:20 TAPER BEGINS AT ℄ WB TH 14 (WBTH14) STA. 318+51.57 24.00' LT

(2) ℄ SB CSAH 12 (SBCSAH12G) P.O.T. STA. 76+34.54 = ℄ EB TH 14 (EBTH14) P.O.C. STA. 315+95.45 X=589982.784 Y=218666.469

(3) ℄ SB CSAH 12 (SBCSAH12G) P.O.T. STA. 77+18.57 = ℄ WB TH 14 (WBTH14) P.O.C. STA. 316+23.97 X=590009.889 Y=218746.005

(4) 1:20 TAPER BEGINS AT ℄ EB TH 14 (EBTH14) STA. 312+42.86 12.00' RT

(5) SEE GRADING PLANS

(6) STATION EQUATION: ℄ WB TH 14 (WBTH14) STA. 316+40.61 (BK) = STA. 316+09.72 (AH) P.T. STA. 316+40.61 X=590025.492 Y=218740.216

7. NO KNOWN UTILITIES IN THIS AREA.

8. SEE BRIDGE SURVEY SHEET FOR B.M. INFORMATION.

(9) 138" W x 114" H BRIDGE MOUNTED OVERHEAD SIGN

CONSTRUCTION NOTES

THE 2005 EDITION OF THE MINNESOTA DEPARTMENT OF TRANSPORTATION "STANDARD SPECIFICATIONS FOR CONSTRUCTION" SHALL GOVERN.

BRIDGE SEAT REINFORCEMENT SHALL BE CAREFULLY PLACED TO AVOID INTERFERENCE WITH DRILLING HOLES FOR ANCHOR RODS. THE SUPERSTRUCTURE BEAMS SHALL BE ERECTED IN FINAL POSITION PRIOR TO DRILLING HOLES FOR AND PLACING ANCHOR RODS.

THE FIRST TWO DIGITS OF EACH BAR MARK INDICATE THE BAR SIZE WHICH APPROXIMATES THE NOMINAL DIAMETER OF THE BAR IN MILLIMETERS (mm).

BARS MARKED WITH THE SUFFIX "E" SHALL BE EPOXY COATED.

ALL REINFORCEMENT SHALL BE 2 in. CLEAR, UNLESS SHOWN OR NOTED OTHERWISE.

THE SUBSURFACE UTILITY INFORMATION IN THIS PLAN IS UTILITY QUALITY LEVEL D. THIS UTILITY QUALITY LEVEL WAS DETERMINED ACCORDING TO THE GUIDELINES OF CI/ASCE 38-02, ENTITLED "STANDARD GUIDELINES FOR THE COLLECTION AND DEPICTION OF EXISTING SUBSURFACE UTILITY DATA".

THE PILE LOADS SHOWN IN THE PLANS AND THE CORRESPONDING NOMINAL PILE BEARING RESISTANCE (Rn) WERE COMPUTED USING LRFD METHODOLOGY. PILE BEARING RESISTANCE DETERMINED IN THE FIELD SHALL INCORPORATE THE METHODS AND/OR FORMULAS DESCRIBED IN THE SPECIAL PROVISIONS.

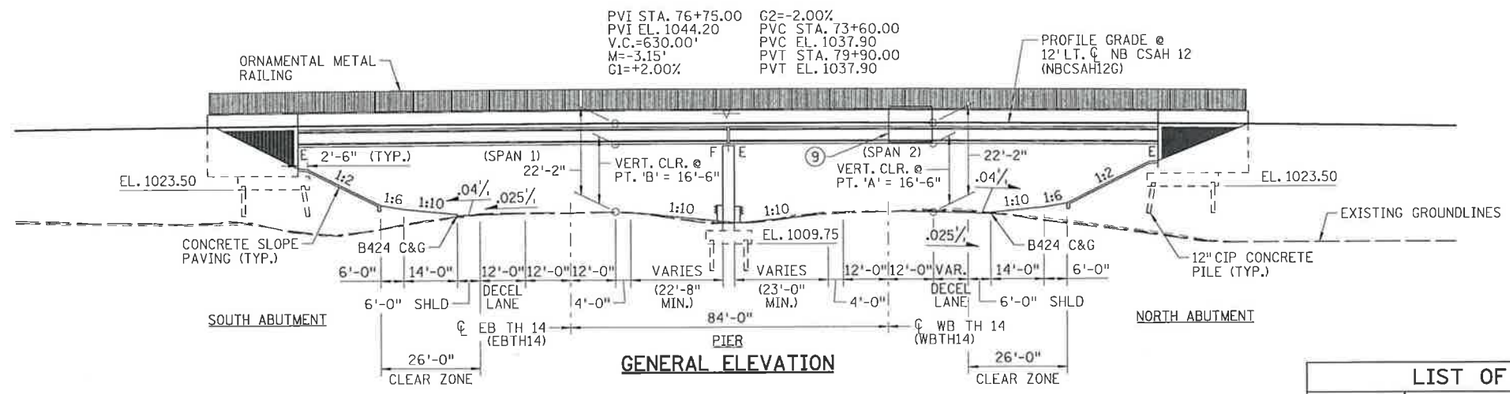

GENERAL ELEVATION

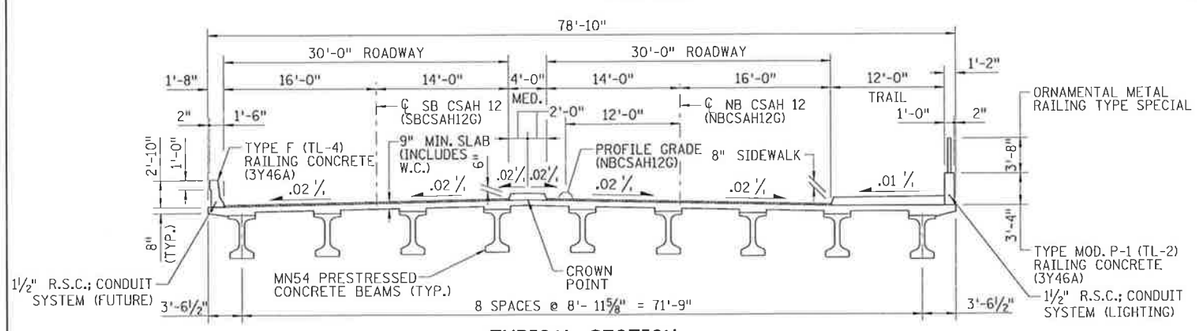

TYPICAL SECTION

LIST OF SHEETS

B1	GENERAL PLAN & ELEVATION
B2	BRIDGE LAYOUT
B3	VISUAL QUALITY DETAILS
B4 - B13	ABUTMENT DETAILS
B14 - B16	PIER DETAILS
B17	FRAMING PLAN
B18	MN54 P/S CONCRETE BEAM
B19 - B23	BRIDGE DECK DETAILS
B24	CONCRETE BARRIER DETAILS
B25 & B26	ORNAMENTAL METAL RAILING DETAILS
B27	BRIDGE SLOPE PAVING
B28 - B33	BRIDGE APPROACH PANEL
B34 - B38	B-DETAILS
B39	AS-BUILT BRIDGE DATA
B40	BRIDGE SURVEY
B41	BRIDGE SURVEY PLAN & PROFILE
B42	BORINGS
B43	OVERHEAD SIGN DETAILS

I HEREBY CERTIFY THAT THIS PLAN WAS PREPARED BY ME OR UNDER MY DIRECT SUPERVISION AND THAT I AM A DULY LICENSED PROFESSIONAL ENGINEER UNDER THE LAWS OF THE STATE OF MINNESOTA.

Print Name: JANET ELIZABETH GRONERT
Signature: Janet Elizabeth Gronert
Date 2/21/12 License # 44325
SRF CONSULTING GROUP, INC.

BLUE EARTH COUNTY

BRIDGE NO. 07587

CSAH 12 OVER TH 14
3.7 MILES EAST OF JCT. CSAH 5 AND TH 14

MN54 PRESTRESSED CONCRETE BEAMS
116'-116' SPANS
64' ROADWAY INCLUDING MEDIAN & 12' TRAIL

BRIDGE I.D. NO. 501

SEC. 10/11, T108N, R26W,
CITY OF MANKATO
BLUE EARTH COUNTY

APPROVED: Allen Bosley 3/27/12
BLUE EARTH COUNTY ENGINEER DATE
APPROVED: Nancy Daubenberger 3-27-12
STATE BRIDGE ENGINEER DATE

h:\projects\6962\dr\final\plan\6962.pse.dgn
2/9/2012
10:59:43 AM

MN/DOT REVIEW UNIT: PAUL STENBERG - (651) 366-4513	STATE AID PROJ. NO. 007-612-011	JOB NO. T71116	STATE PROJ. NO. 0702-07587 (T.H. 14=007)	DES: JEG / CHK: LAE	DR: ERJ / CHK: LAE	SHEET B1 OF B43	Bridge No. 07587 / Comm. No. 6962

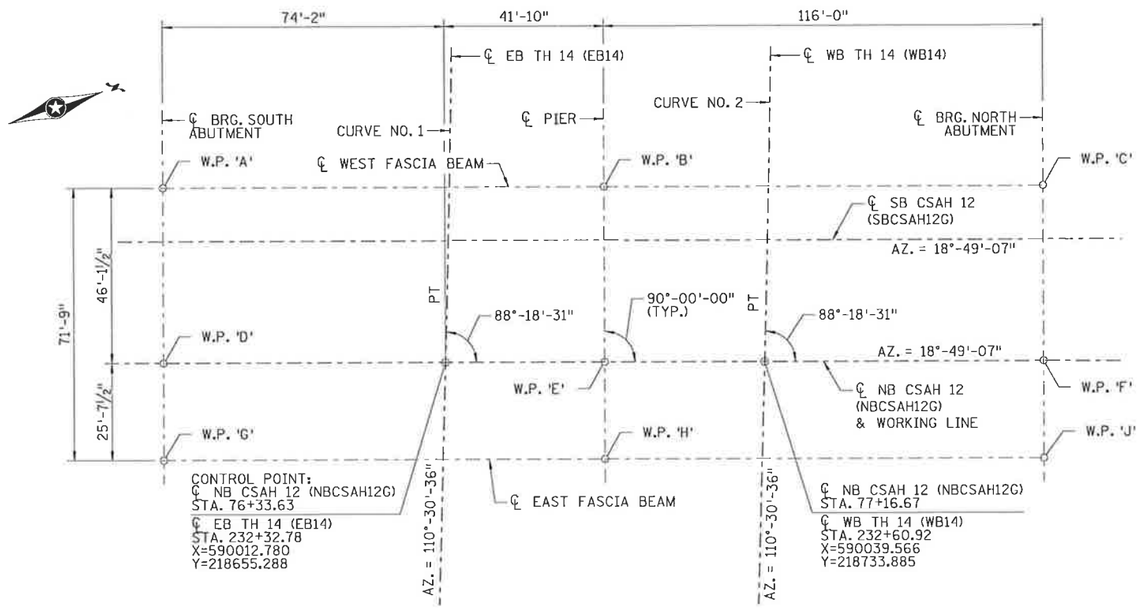

WORKING POINT LAYOUT

CURVE NO. 1 DATA

℄ EB TH 14 (EB14)
P.I. STA. 221+80.73
X=589004.899
Y=219032.319
Δ = 21°-06'-47"
D = 1°-00'-26"
T = 1060.03'
L = 2096.01'
R = 5688.08'
P.C. STA. 211+20.71
P.T. STA. 232+16.72

CURVE NO. 2 DATA

℄ WB TH 14 (WB14)
P.I. STA. 221+96.20
X=589019.492
Y=219115.477
Δ = 21°-06'-47"
D = 0°-59'-34"
T = 1075.50'
L = 2126.60'
R = 5771.08'
P.C. STA. 211+20.71
P.T. STA. 232+47.30

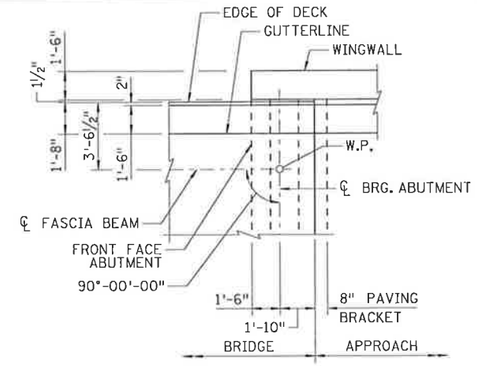

N.W. CORNER DETAIL

(S.W. CORNER SIMILAR)

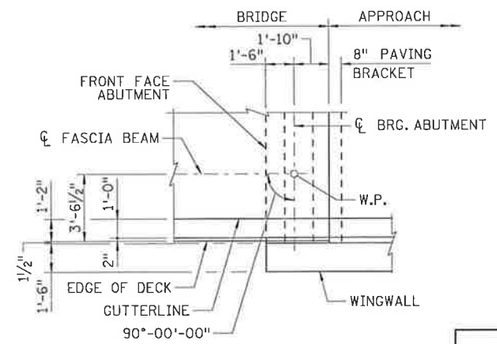

N.E. CORNER DETAIL

(S.E. CORNER SIMILAR)

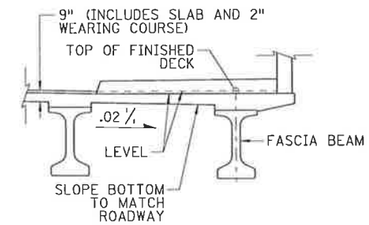

SIDEWALK DETAIL

TOP OF ROADWAY TO BRIDGE SEAT

	S. ABUT.	PIER	N. ABUT.
(1) SLAB THICKNESS	9"	9"	9"
STOOL HEIGHT	3 ¼"	3 ¼"	3 ¼"
BEAM HEIGHT	54"	54"	54"
BEARING HEIGHT	5 ¼"	3 ¼"	5 ¼"
TOTAL	5.96	5.79	5.96

NOTES:

(1) SLAB THICKNESS AT W.P. 'G', 'H', AND 'J' IS 11¼". SEE SIDEWALK DETAIL.

DIMENSIONS BETWEEN WORKING POINTS / COORDINATES / ELEVATION

POINT	STATION	A	B	C	D	E	F	G	H	J	COORDINATES X	COORDINATES Y	ELEVATION: TOP OF FIN. DECK	ELEVATION: FIN. DECK TO BR. SEAT	ELEVATION: BRIDGE SEAT	POINT
A	75+59.47		116.00		46.12	124.83			136.40	242.84	589945.199	218599.967	1040.10	5.96	1034.14	A
B	76+75.47			116.00		46.12	124.83	136.40		136.40	589982.618	218709.766	1040.52	5.79	1034.73	B
C	77+91.47						46.12	242.84	136.40		590020.037	218819.565	1040.09	5.96	1034.13	C
D	75+59.47					116.00		25.63	118.80		589988.857	218585.089	1040.38	-	-	D
E	76+75.47						116.00		25.63	118.80	590026.276	218694.888	1040.80	-	-	E
F	77+91.47									25.63	590063.694	218804.687	1040.37	-	-	F
G	75+59.47								116.00		590013.114	218576.822	1040.06	(1) 6.15	1033.91	G
H	76+75.47									116.00	590050.533	218686.622	1040.48	(1) 5.98	1034.50	H
J	77+91.47										590087.951	218796.421	1040.05	(1) 6.15	1033.90	J

SCHEDULE OF QUANTITIES FOR ENTIRE BRIDGE

ITEM NO.	ITEM	UNIT	QUANTITY
2301.531	EXPANSION JOINTS DESIGN E8H	LIN. FT	158 (P)
2301.553	BRIDGE APPROACH PANELS	SQ. YD.	351 (P)
2401.501	STRUCTURAL CONCRETE (1A43)	CU. YD.	305 (P)
2401.501	STRUCTURAL CONCRETE (3Y43)	CU. YD.	365 (P)
2401.512	BRIDGE SLAB CONCRETE (3Y36A)	SQ. FT.	18578 (P)
2401.513	TYPE MOD. P-1 (TL-2) RAILING CONC (3Y46A)	LIN. FT.	276 (P)
2401.513	TYPE F (TL-4) RAILING CONCRETE (3Y46A)	LIN. FT.	276 (P)
2401.515	SIDEWALK CONCRETE (3Y46A)	SQ. FT.	3308 (P)
2401.516	RAISED MEDIAN CONCRETE (3Y46A)	SQ. FT.	1103 (P)
2401.541	REINFORCEMENT BARS	POUND	24230 (P)
2401.541	REINFORCEMENT BARS (EPOXY COATED)	POUND	191220 (P)
2401.601	STRUCTURE EXCAVATION	LUMP SUM	1
2402.583	ORNAMENTAL METAL RAILING TYPE SPECIAL	LIN. FT.	270 (P)
2402.595	BEARING ASSEMBLY	EACH	36
2404.501	CONCRETE WEARING COURSE (3U17A)	SQ. FT.	16540 (P)
2404.618	BLASTING (SPECIAL)	SQ. FT.	16540 (P)
2405.502	PRESTRESSED CONCRETE BEAMS MN54	LIN. FT.	2098 (P)
2405.511	DIAPHRAGMS FOR TYPE MN54 PREST BEAMS	LIN. FT.	448 (P)
2411.618	ARCHITECTURAL CONCRETE TEXTURE (FRACTURED FIN)	SQ. FT.	1157 (P)
2411.618	ARCHITECTURAL SURFACE FINISH (SINGLE COLOR)	SQ. FT.	1157 (P)
2452.507	C-I-P CONCRETE PILING DELIVERED 12"	LIN. FT.	15140
2452.508	C-I-P CONCRETE PILING DRIVEN 12"	LIN. FT.	15140
2452.519	C-I-P CONC TEST PILES 125' LONG 12"	EACH	2
2452.519	C-I-P CONC TEST PILES 135' LONG 12"	EACH	4
2452.527	PILE REDRIVING	EACH	34
2452.602	PILE ANALYSIS	EACH	6
2452.603	PILE COATING	LIN. FT	6160
2502.502	DRAINAGE SYSTEM (B910)	LUMP SUM	1
2514.501	CONCRETE SLOPE PAVING	SQ. YD.	422 (P)
2545.509	CONDUIT SYSTEM (FUTURE)	LUMP SUM	1
2545.509	CONDUIT SYSTEM (LIGHTING)	LUMP SUM	1
2564.522	STR STEEL-TRUSSES FOR OH SIGNS BR MTD	POUND	1060 (P)

(P) DENOTES PLAN QUANTITY PAY ITEM AS PER MnDOT SPEC. 1901.

NO	DATE	BY	CKD	APPR	REVISION

...\br\final\plan\6962_wpl.dgn

I hereby certify that this plan, specification, or report was prepared by me or under my direct supervision and that I am a duly Licensed Professional Engineer under the laws of the State of Minnesota.

Print Name: JANET ELIZABETH GRONERT

Janet Elizabeth Gronert

Date 2/21/12 License # 44325

STATE PROJ. NO. 0702-116

BRIDGE NO. 07587

DRAWN BY E. JOHNSON
DESIGNED BY J. GRONERT
CHECKED BY L. ERICKSON
COMM. NO. 6962

SRF CONSULTING GROUP, INC.

BLUE EARTH COUNTY
BRIDGE LAYOUT
CSAH 12 OVER TH 14

SHEET B2 OF B43

10:59:44 AM
2/9/2012
n:\projects\6962\br\final\plan\6962_wpl.dgn

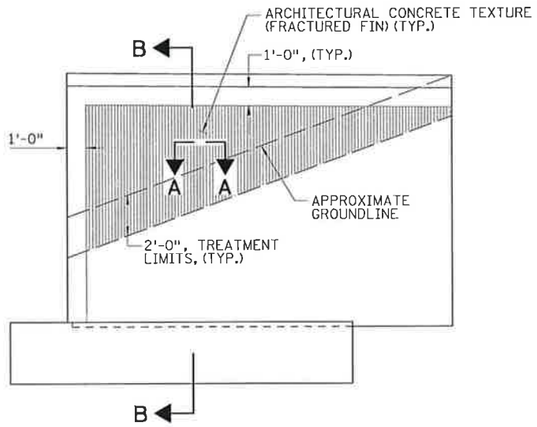

S.W. WINGWALL ELEVATION
(OTHER WINGWALLS SIMILAR)

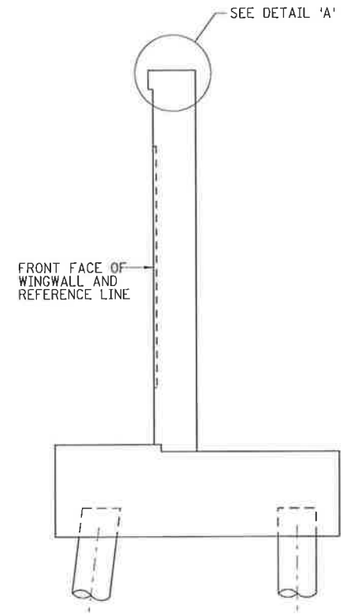

SECTION B-B

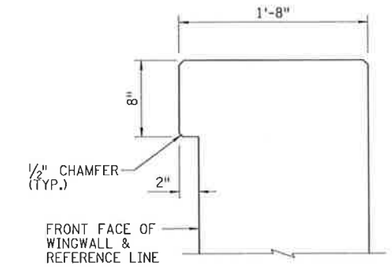

DETAIL 'A'

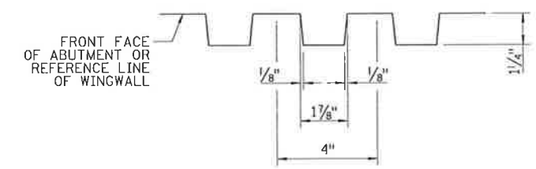

SECTION A-A

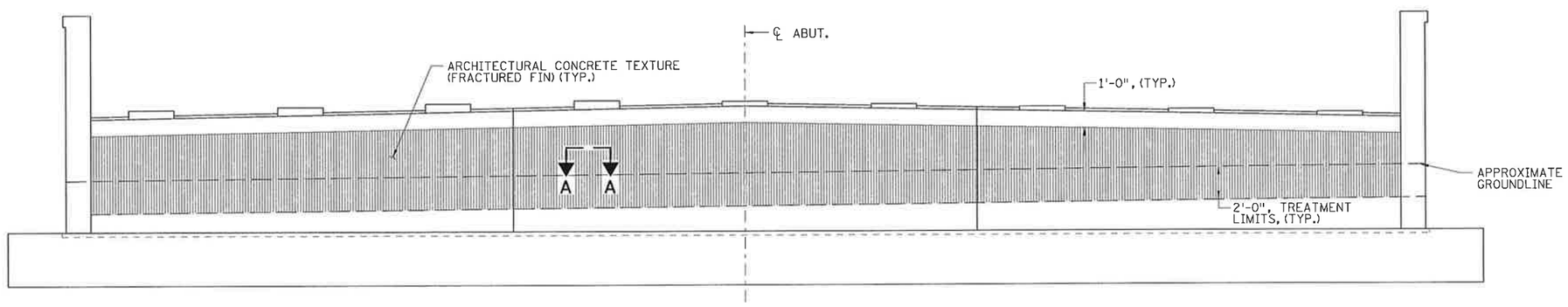

ELEVATION VIEW NORTH ABUTMENT
(SOUTH ABUTMENT SIMILAR)

NO	DATE	BY	CKD	APPR	REVISION

...\br\final\plan\6962_arch01.dgn

I hereby certify that this plan, specification, or report was prepared by me or under my direct supervision and that I am a duly Licensed Professional Engineer under the laws of the State of Minnesota.

Print Name: JANET ELIZABETH GRONERT

Janet Elizabeth Gronert

Date 2/21/12 License # 44325

STATE PROJ. NO.	DRAWN BY B. SIMON
0702-116	DESIGNED BY J. GRONERT
BRIDGE NO. 07587	CHECKED BY L. ERICKSON
	COMM. NO. 6962

SRF CONSULTING GROUP, INC.

BLUE EARTH COUNTY

VISUAL QUALITY DETAILS
CSAH 12 OVER TH 14

SHEET B3 OF B43

10:59:45 AM
2/9/2012
M:\projects\6962\br\final\plan\6962_arch01.dgn

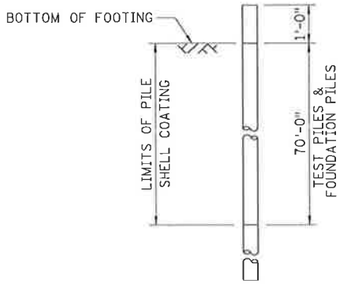

PILE COATING DETAILS

ALL ABUTMENT PILES

PILE COATING TO BE PAID FOR AS "PILE COATING" BY THE LIN. FT.

SEE SPECIAL PROVISIONS.

SOUTH ABUTMENT COMPUTED PILE LOAD - TONS/PILE	
FACTORED DEAD LOAD + EARTH PRESSURE	58.2
FACTORED LIVE LOAD	-
FACTORED DOWN DRAG	35.0
* FACTORED DESIGN LOAD = PILE BEARING RESISTANCE	93.2

* BASED ON STRENGTH I LOAD COMBINATION

SOUTH ABUTMENT REQUIRED NOMINAL PILE BEARING RESISTANCE Rn - TONS/PILE		
FIELD CONTROL METHOD	Φ_{dyn}	* R_n
Mn/DOT NOMINAL RESISTANCE FORMULA	0.40	233
PDA	0.65	144

* R_n = FACTORED DESIGN LOAD/Φ_{dyn}

PILE NOTES:

2 - 12" C-I-P TEST PILES, 135 FEET LONG.

42 - 12" C-I-P PILES, ESTIMATED LENGTH 120 FEET LONG.

44 - 12" C-I-P PILES REQUIRED FOR SOUTH ABUTMENT.

PILE SPACING SHOWN IS AT BOTTOM OF FOOTING.

FOR PILE SPLICE, SEE DETAIL B201.

PILES SHALL HAVE A NOMINAL OUSIDE DIAMETER OF 12" AND WALL THICKNESS OF 0.3125 INCHES.

NOMINAL PILE BEARING RESISTANCE SHALL BE DETERMINED BY THE USE OF A PILE DRIVING ANALYZER (PDA). PILE LENGTHS SHOWN ARE BASED ON USING A PDA.

PILES MARKED THUS ⟲ SHALL BE BATTERED 2" PER FOOT IN THE DIRECTION SHOWN.

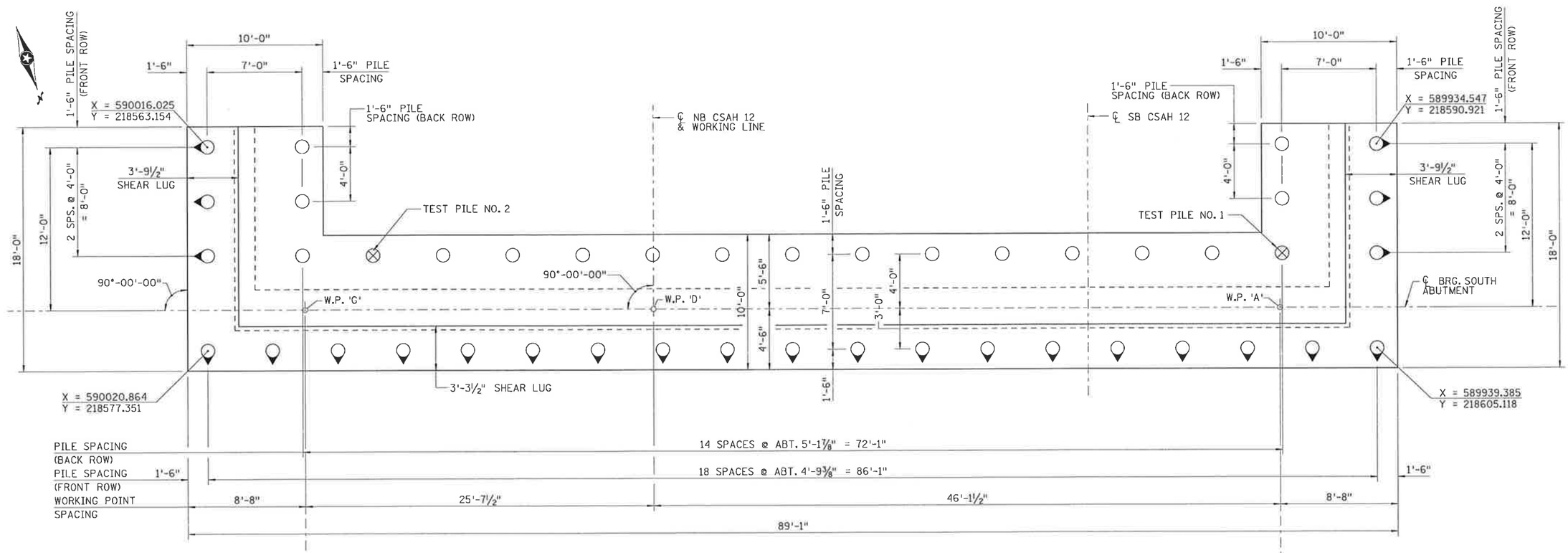

FOOTING PLAN

NO	DATE	BY	CKD	APPR	REVISION

...\br\final\plan\6962_abt01.dgn

I hereby certify that this plan, specification, or report was prepared by me or under my direct supervision and that I am a duly Licensed Professional Engineer under the laws of the State of Minnesota.

Print Name: JANET ELIZABETH GRONERT

Date 2/21/12 License # 44325

STATE PROJ. NO. 0702-116

BRIDGE NO. 07587

DRAWN BY B. SIMON

DESIGNED BY J. GRONERT

CHECKED BY L. ERICKSON

COMM. NO. 6962

SRF CONSULTING GROUP, INC.

BLUE EARTH COUNTY

SOUTH ABUTMENT DETAILS

CSAH 12 OVER TH 14

(SHEET 1 OF 5)

SHEET B4 OF B43

10:59:46 AM
2/9/2012
N:\projects\6962\br\final\plan\6962_abt01.dgn

NOTES:

1. MEASURED AT ℄ OF BEARING.
2. MEASURED TO REFERENCE LINE.
3. ELEVATIONS ARE AT FRONT FACE.
4. DIMENSION AT TOP OF WALL.

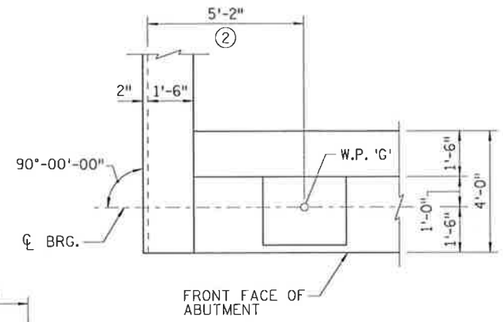

S.E. CORNER DETAIL

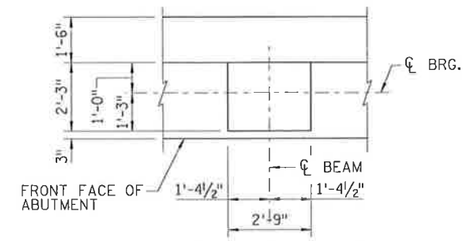

BRIDGE SEAT DETAIL

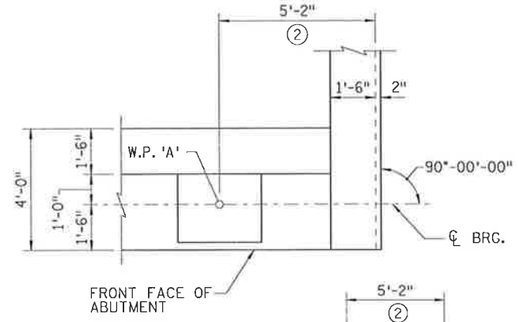

S.W. CORNER DETAIL

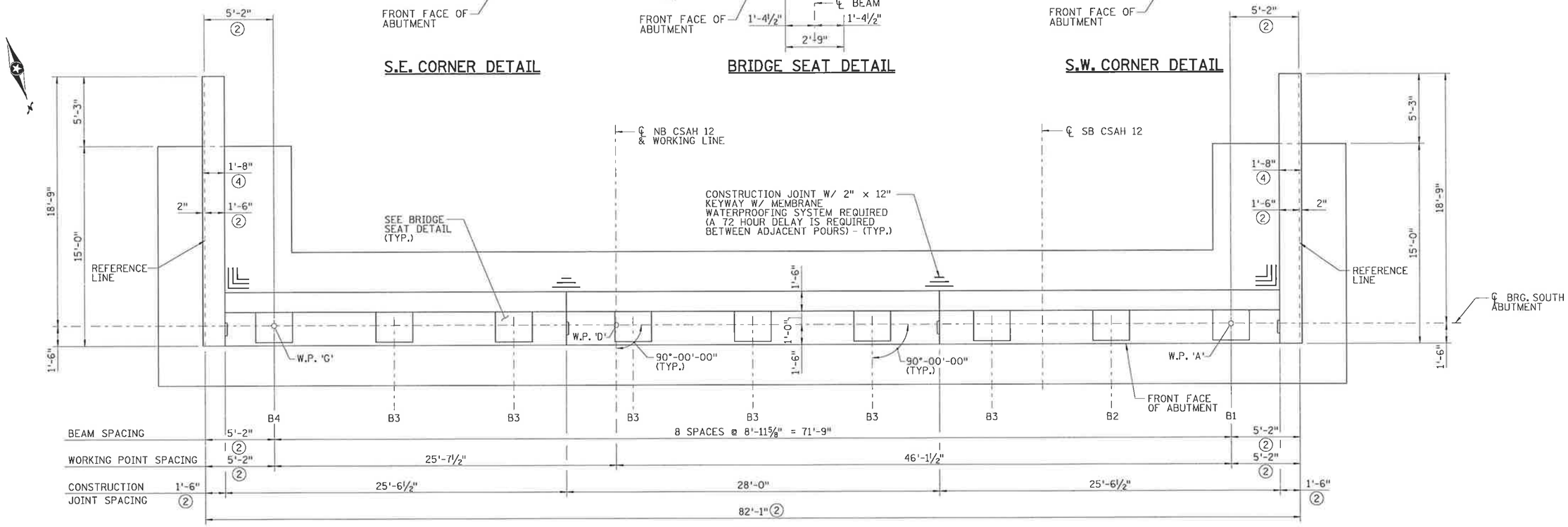

PLAN

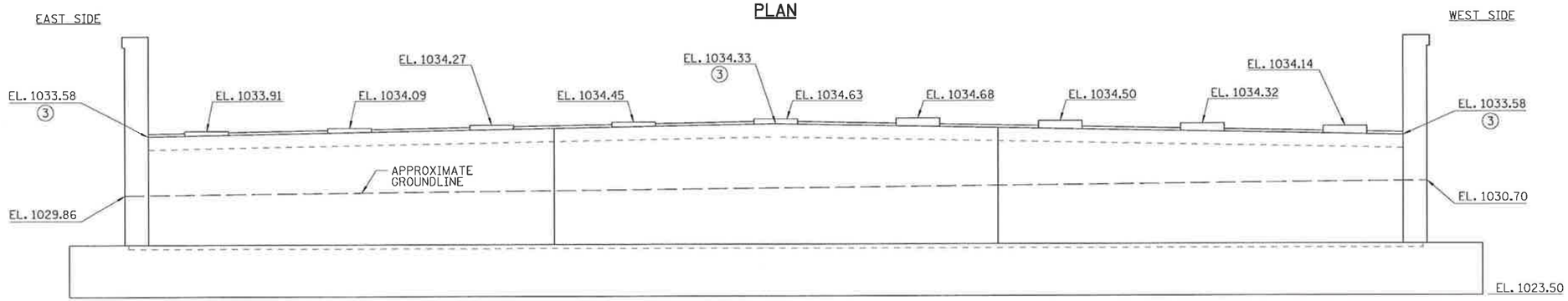

ELEVATION

NO	DATE	BY	CKD	APPR	REVISION

...\br\final\plan\6962_abt02.dgn

I hereby certify that this plan, specification, or report was prepared by me or under my direct supervision and that I am a duly Licensed Professional Engineer under the laws of the State of Minnesota.

Print Name: JANET ELIZABETH GRONERT

Janet Elizabeth Gronert

Date 2/21/12 License # 44325

STATE PROJ. NO. 0702-116

BRIDGE NO. 07587

DRAWN BY B. SIMON

DESIGNED BY J. GRONERT

CHECKED BY L. ERICKSON

COMM. NO. 6962

SRF CONSULTING GROUP, INC.

BLUE EARTH COUNTY

SOUTH ABUTMENT DETAILS

CSAH 12 OVER TH 14

(SHEET 2 OF 5)

SHEET B5 OF B43

10:59:47 AM
2/9/2012
h:\projects\6962\br\final\plan\6962_abt02.dgn

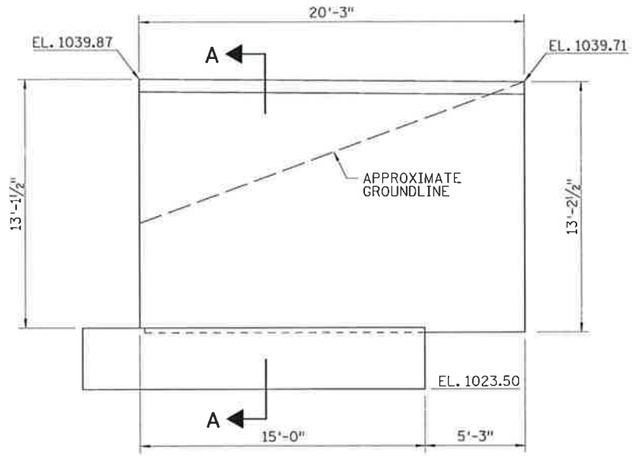

S.W. WINGWALL ELEVATION

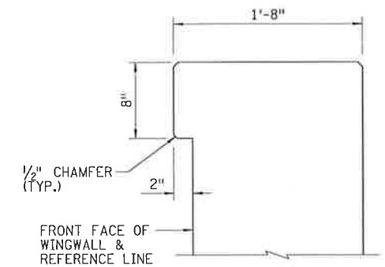

DETAIL 'A'

NOTES:

1. 4" NOMINAL DIA. PERFORATED PIPE, SEE DETAIL B910.
2. MEMBRANE WATERPROOFING SYSTEM.

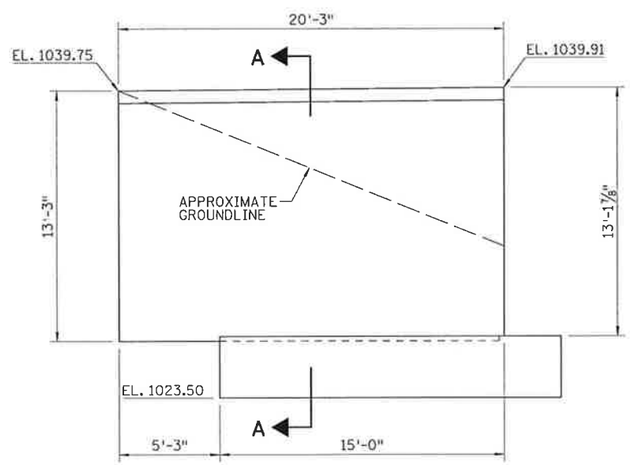

S.E. WINGWALL ELEVATION

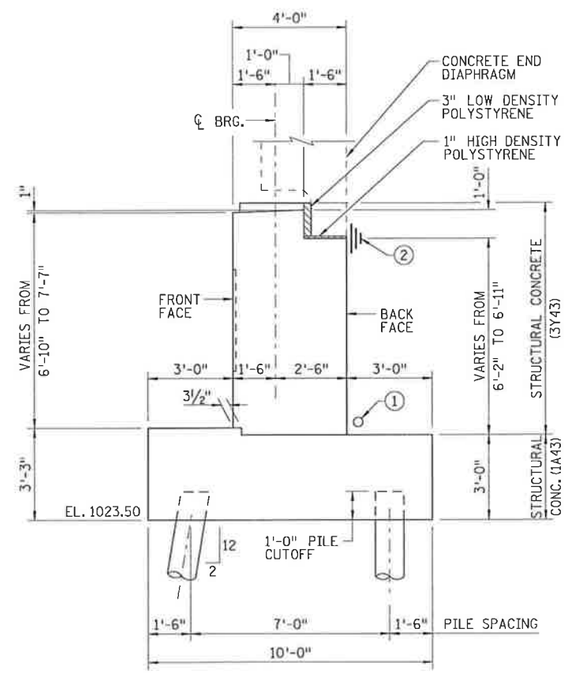

SECTION THRU ABUTMENT

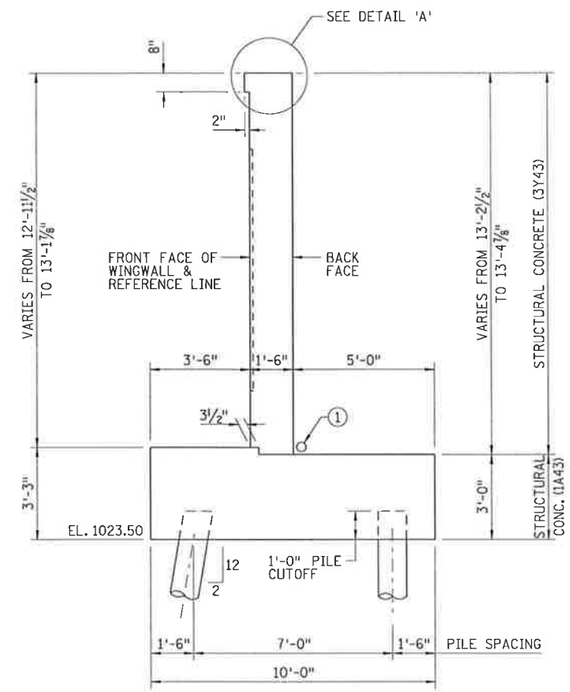

SECTION A-A

NO	DATE	BY	CKD	APPR	REVISION

...\br\final\plan\6962_abt03.dgn

I hereby certify that this plan, specification, or report was prepared by me or under my direct supervision and that I am a duly Licensed Professional Engineer under the laws of the State of Minnesota.

Print Name: JANET ELIZABETH GRONERT

Janet Elizabeth Gronert

Date 2/21/12 License # 44325

STATE PROJ. NO. 0702-116

BRIDGE NO. 07587

DRAWN BY B. SIMON
DESIGNED BY J. GRONERT
CHECKED BY L. ERICKSON
COMM. NO. 6962

SRF CONSULTING GROUP, INC.

BLUE EARTH COUNTY

SOUTH ABUTMENT DETAILS
CSAH 12 OVER TH 14
(SHEET 3 OF 5)

SHEET B6 OF B43

10:59:47 AM
2/9/2012
h:\projects\6962\br\final\plan\6962_abt03.dgn

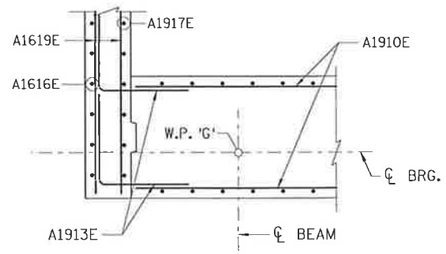

S.E. CORNER REINFORCEMENT DETAIL

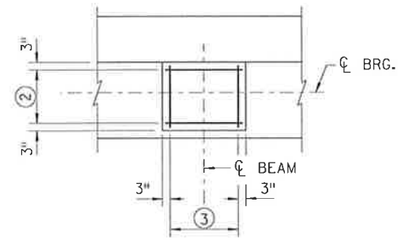

BRIDGE SEAT REINFORCEMENT DETAIL

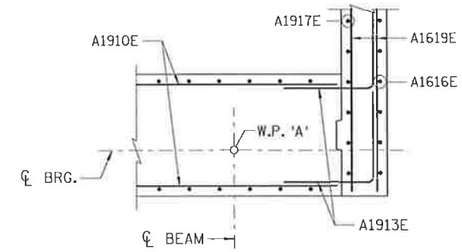

S.W. CORNER REINFORCEMENT DETAIL

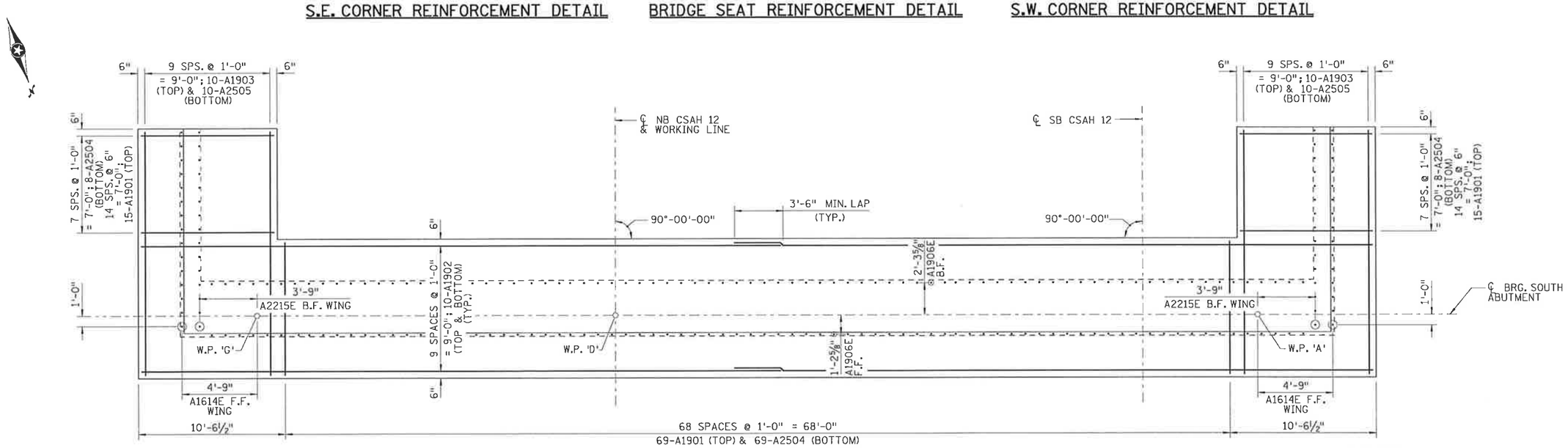

FOOTING REINFORCEMENT PLAN

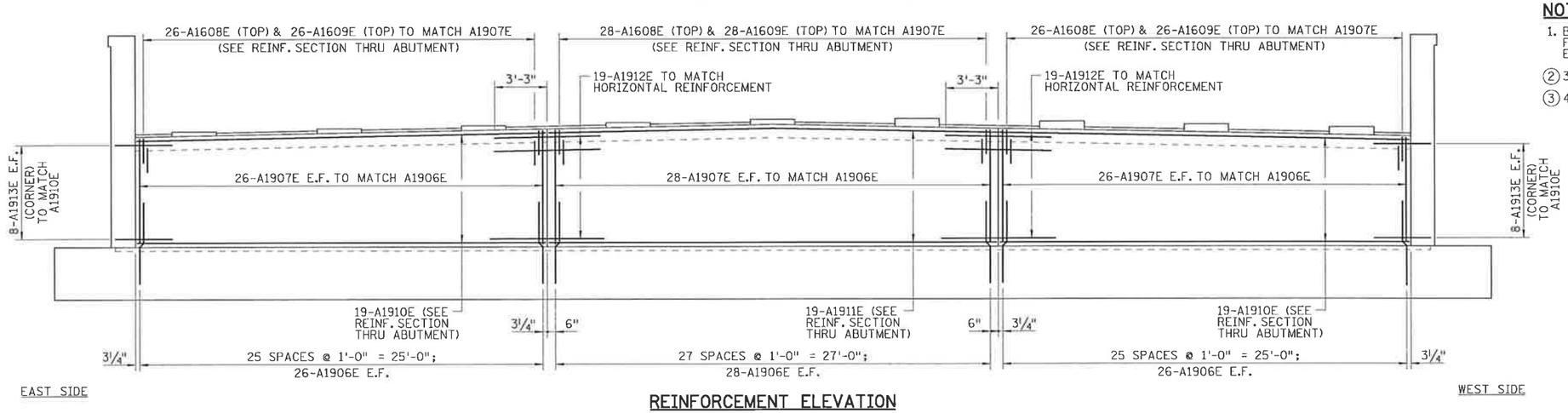

REINFORCEMENT ELEVATION

NOTES:

1. B.F. DENOTES BACK FACE.
   F.F. DENOTES FRONT FACE.
   E.F. DENOTES EACH FACE.

(2) 3 SPACES @ 7" = 1'-9"; 4-A1320E

(3) 4 SPACES @ 6¾" = 2'-3"; 5-A1621E

NO	DATE	BY	CKD	APPR	REVISION

...\br\final\plan\6962_abt04.dgn

I hereby certify that this plan, specification, or report was prepared by me or under my direct supervision and that I am a duly Licensed Professional Engineer under the laws of the State of Minnesota.

Print Name: JANET ELIZABETH GRONERT

Janet Elizabeth Gronert

Date 2/21/12 License # 44325

STATE PROJ. NO. 0702-116

BRIDGE NO. 07587

DRAWN BY B. SIMON
DESIGNED BY J. GRONERT
CHECKED BY L. ERICKSON
COMM. NO. 6962

SRF CONSULTING GROUP, INC.

BLUE EARTH COUNTY

SOUTH ABUTMENT DETAILS
CSAH 12 OVER TH 14
(SHEET 4 OF 5)

SHEET B7 OF B43

10:59:48 AM
2/9/2012
h:\projects\6962\br\final\plan\6962_abt04.dgn

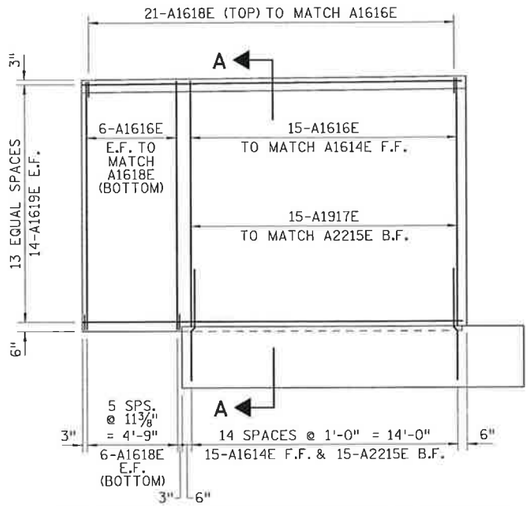

S.E. WINGWALL REINFORCEMENT ELEVATION

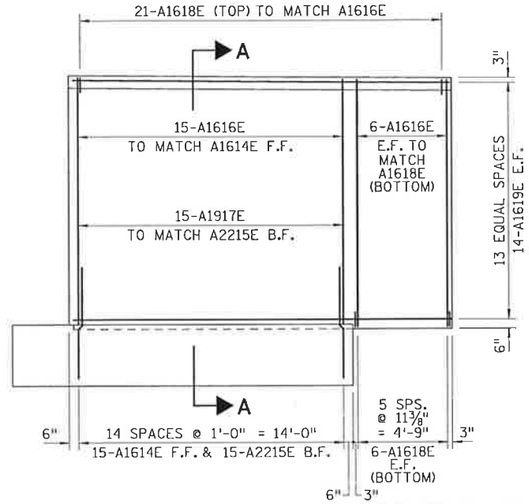

S.W. WINGWALL REINFORCEMENT ELEVATION

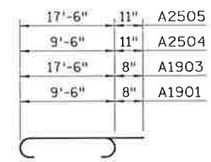

A1901, A1903, A2504 & A2505

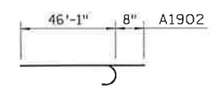

A1902

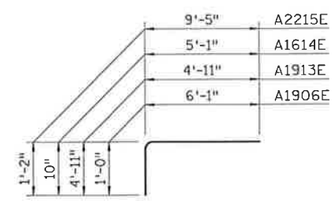

A1906E, A1913E, A1614E, & A2215E

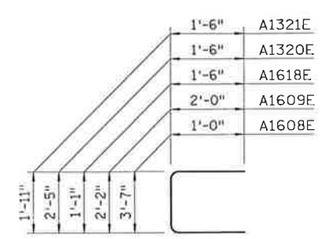

A1608E, A1609E & A1618E, A1320E & A1321E

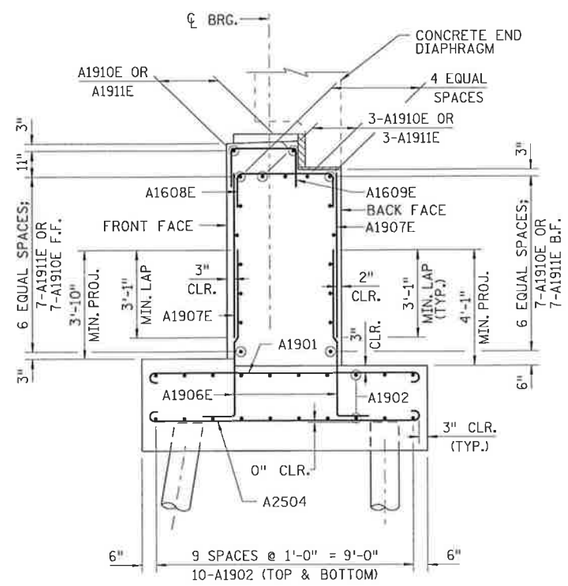

REINFORCEMENT SECTION THRU ABUTMENT

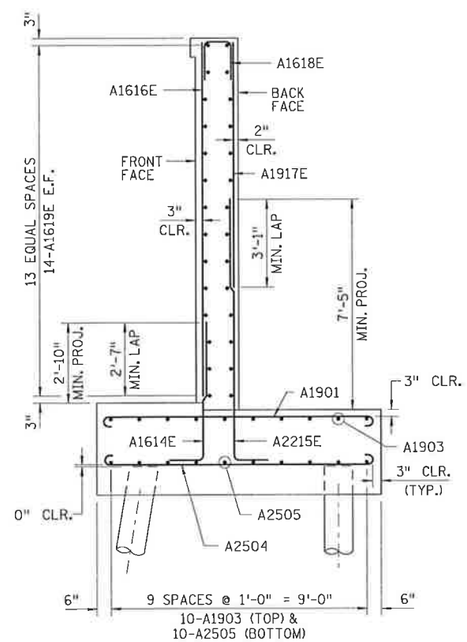

REINFORCEMENT SECTION A-A

BILL OF REINFORCEMENT: SOUTH ABUTMENT

MARK	NO	LENGTH [FT - IN]	SHAPE	LOCATION
A1901	99	10 - 10	BENT	FOOTING TRANS TOP
A1902	40	46 - 9	BENT	FOOTING LONGIT TOP & BOTTOM
A1903	20	18 - 10	BENT	FOOTING LONGIT WING TOP
A2504	85	11 - 4	BENT	FOOTING TRANS BOTTOM
A2505	20	19 - 4	BENT	FOOTING LONGIT WING BOTTOM
A1906E	160	7 - 1	BENT	DOWEL
A1907E	160	6 - 0	STR	STEM VERT
A1608E	80	5 - 7	BENT	STEM CAP
A1609E	80	6 - 2	BENT	STEM CAP
A1910E	38	25 - 2	STR	HORIZ.
A1911E	19	27 - 8	STR	HORIZ.
A1912E	38	6 - 6	STR	HORIZ. DOWEL
A1913E	32	9 - 10	BENT	CORNER
A1614E	30	5 - 11	BENT	WING DOWEL FF
A2215E	30	10 - 7	BENT	WING DOWEL BF
A1616E	54	12 - 6	STR	WW VERT FF & CANT.
A1917E	30	8 - 11	STR	WW VERT BF
A1618E	54	4 - 1	BENT	WW CAP
A1619E	56	19 - 11	STR	WW HORIZ EF
A1320E	36	5 - 5	BENT	BRG SEAT
A1321E	45	4 - 11	BENT	BRG SEAT
		-		

SUMMARY OF QUANTITIES : SOUTH ABUTMENT

	ITEM	UNIT	QUANTITY
	STRUCTURAL CONCRETE (1A43)	CU. YD.	121
	STRUCTURAL CONCRETE (3Y43)	CU. YD.	114
	REINFORCEMENT BARS	POUND	8590
	REINFORCEMENT BARS (EPOXY COATED)	POUND	10810
4	C-I-P CONCRETE PILING DELIVERED 12"	LIN. FT.	5040
4	C-I-P CONCRETE PILING DRIVEN 12"	LIN. FT.	5040
	C-I-P CONC TEST PILES 135' LONG 12"	EACH	2
	PILE REDRIVING	EACH	2
6	PILE ANALYSIS	EACH	2
5	PILE COATING	LIN. FT	3080
2	MEMBRANE WATERPROOFING SYSTEM	LIN. FT.	120
2	1" HIGH DENSITY POLYSTYRENE	LIN. FT.	72
2	3" LOW DENSITY POLYSTYRENE	LIN. FT.	72
3	B. M. DISK	EACH	1
	ARCHITECTURAL CONCRETE TEXTURE (FRACTURED FIN)	SQ. FT.	639
	ARCHITECTURAL SURFACE FINISH (SINGLE COLOR)	SQ. FT.	639

NOTES:

1. B.F. DENOTES BACK FACE.
   E.F. DENOTES EACH FACE.
   F.F. DENOTES FRONT FACE.

(2) INCLUDED IN PAYMENT FOR STRUCTURAL CONRETE (3Y43).

(3) COUNTY WILL FURNISH DISK. BEND PRONGS OUTWARD TO ANCHOR DISK IN CONCRETE. BOTTOM OF DISK TOP TO BE PLACED FLUSH WITH CONCRETE. PAYMENT FOR PLACING DISK TO BE INCLUDED IN PRICE BID FOR STRUCTURAL CONCRETE (3Y43).

(4) DOES NOT INCLUDE TEST PILES.

(5) INCLUDES TEST PILES, SEE SPECIAL PROVISIONS.

(6) SEE SPECIAL PROVISIONS.

NO	DATE	BY	CKD	APPR	REVISION

...\br\final\plan\6962_abt05.dgn

I hereby certify that this plan, specification, or report was prepared by me or under my direct supervision and that I am a duly Licensed Professional Engineer under the laws of the State of Minnesota.

Print Name: JANET ELIZABETH GRONERT

Date 2/21/12 License # 44325

STATE PROJ. NO. 0702-116

BRIDGE NO. 07587

DRAWN BY B. SIMON
DESIGNED BY J. GRONERT
CHECKED BY L. ERICKSON
COMM. NO. 6962

SRF CONSULTING GROUP, INC.

BLUE EARTH COUNTY
SOUTH ABUTMENT DETAILS
CSAH 12 OVER TH 14
(SHEET 5 OF 5)

SHEET B8 OF B43

10:59:49 AM
2/9/2012
n:\projects\6962\br\final\plan\6962_abt05.dgn

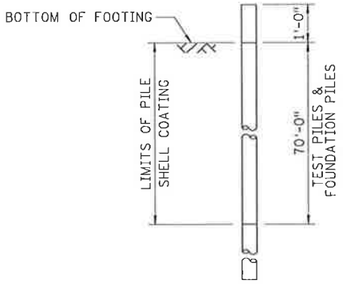

PILE COATING DETAILS

ALL ABUTMENT PILES

PILE COATING TO BE PAID FOR AS "PILE COATING" BY THE LIN. FT.

SEE SPECIAL PROVISIONS.

NORTH ABUTMENT COMPUTED PILE LOAD - TONS/PILE	
FACTORED DEAD LOAD + EARTH PRESSURE	58.3
FACTORED LIVE LOAD	-
FACTORED DOWN DRAG	35.0
* FACTORED DESIGN LOAD = PILE BEARING RESISTANCE	93.3

* BASED ON STRENGTH I LOAD COMBINATION

NORTH ABUTMENT REQUIRED NOMINAL PILE BEARING RESISTANCE Rn - TONS/PILE		
FIELD CONTROL METHOD	Φ_{dyn}	* R_n
Mn/DOT NOMINAL RESISTANCE FORMULA	0.40	233
PDA	0.65	144

* R_n = FACTORED DESIGN LOAD/Φ_{dyn}

PILE NOTES:

2 - 12" C-I-P TEST PILES, 135 FEET LONG.

42 - 12" C-I-P PILES, ESTIMATED LENGTH 120 FEET LONG.

44 - 12" C-I-P PILES REQUIRED FOR SOUTH ABUTMENT.

PILE SPACING SHOWN IS AT BOTTOM OF FOOTING.

FOR PILE SPLICE, SEE DETAIL B201.

PILES SHALL HAVE A NOMINAL OUSIDE DIAMETER OF 12" AND WALL THICKNESS OF 0.3125 INCHES.

NOMINAL PILE BEARING RESISTANCE SHALL BE DETERMINED BY THE USE OF A PILE DRIVING ANALYZER (PDA). PILE LENGTHS SHOWN ARE BASED ON USING A PDA.

PILES MARKED THUS ⊙ SHALL BE BATTERED 2" PER FOOT IN THE DIRECTION SHOWN.

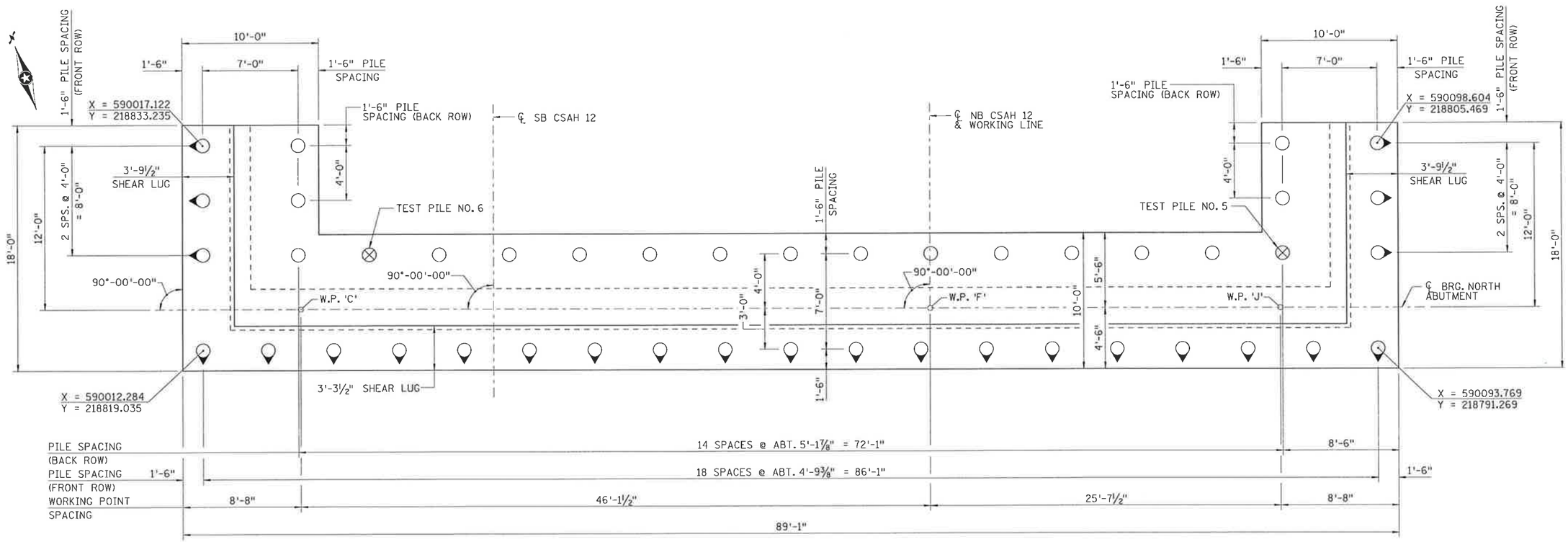

FOOTING PLAN

NO	DATE	BY	CKD	APPR	REVISION

...\br\final\plan\6962_abt10.dgn

I hereby certify that this plan, specification, or report was prepared by me or under my direct supervision and that I am a duly Licensed Professional Engineer under the laws of the State of Minnesota.

Print Name: JANET ELIZABETH GRONERT

Janet Elizabeth Gronert

Date 2/21/12 License # 44325

STATE PROJ. NO. 0702-116

BRIDGE NO. 07587

DRAWN BY B. SIMON

DESIGNED BY J. GRONERT

CHECKED BY L. ERICKSON

COMM. NO. 6962

SRF CONSULTING GROUP, INC.

BLUE EARTH COUNTY

NORTH ABUTMENT DETAILS

CSAH 12 OVER TH 14

(SHEET 1 OF 5)

SHEET B9 OF B43

10:59:50 AM
2/9/2012
M:\projects\6962\br\final\plan\6962_abt10.dgn

NOTES:

1. MEASURED AT ℄ OF BEARING.
2. MEASURED TO REFERENCE LINE.
3. ELEVATIONS ARE AT FRONT FACE.
4. DIMENSION AT TOP OF WALL.

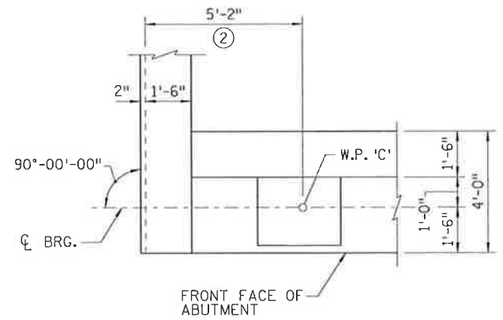

N.W. CORNER DETAIL

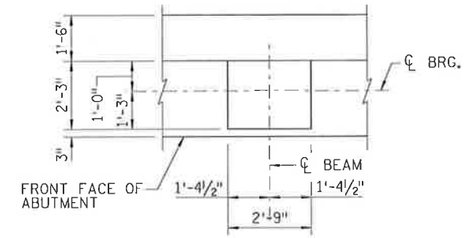

BRIDGE SEAT DETAIL

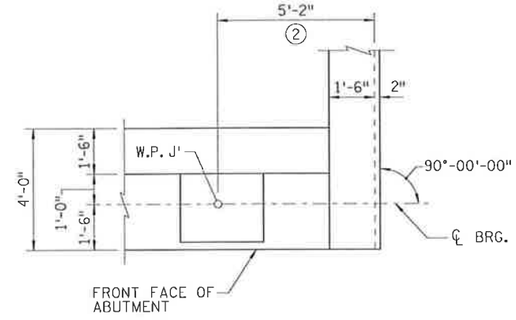

N.E. CORNER DETAIL

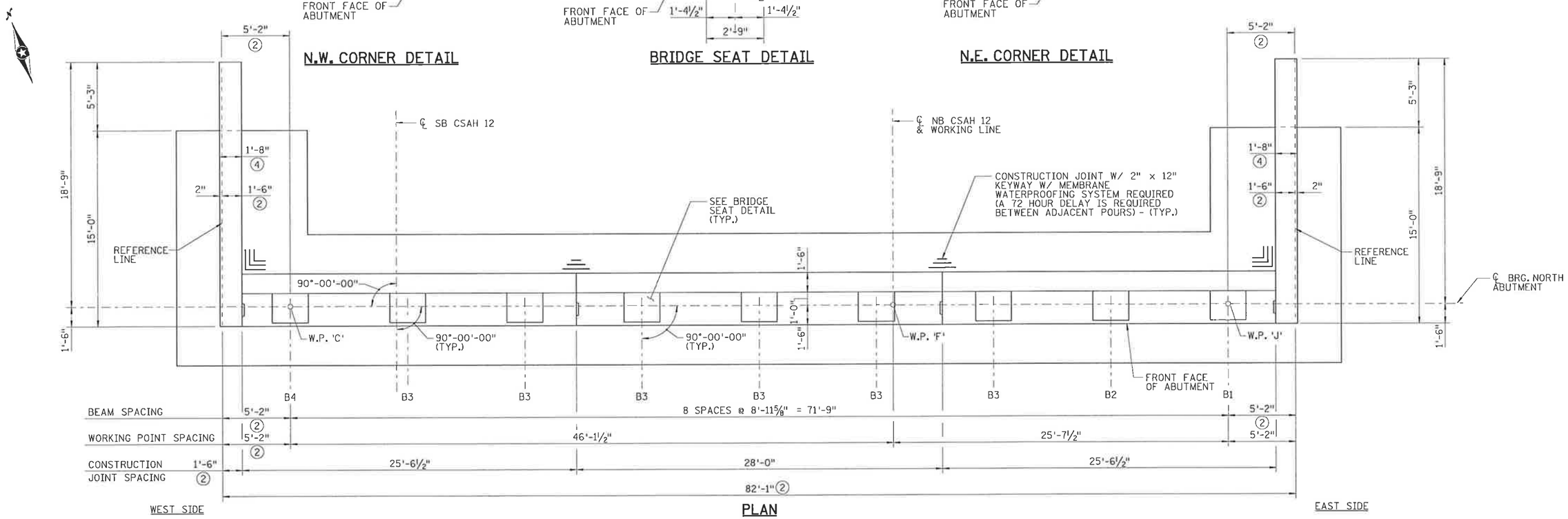

PLAN

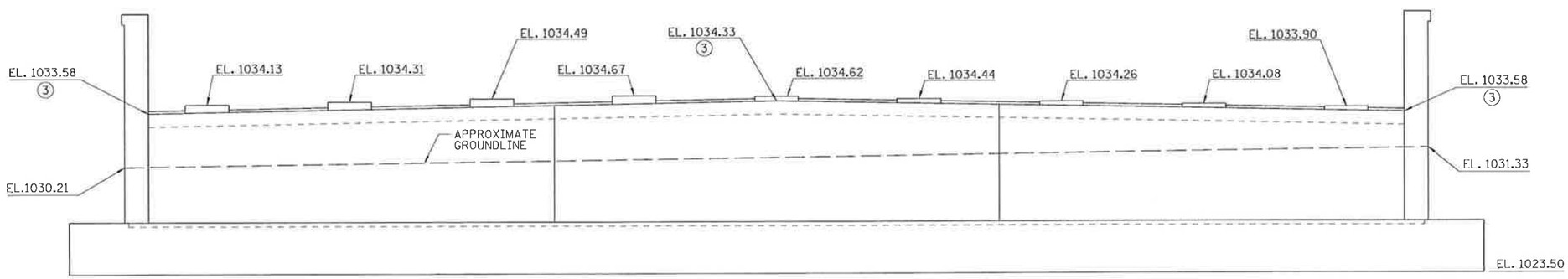

ELEVATION

NO	DATE	BY	CKD	APPR	REVISION

...\br\final\plan\6962_abt11.dgn

I hereby certify that this plan, specification, or report was prepared by me or under my direct supervision and that I am a duly Licensed Professional Engineer under the laws of the State of Minnesota.

Print Name: JANET ELIZABETH GRONERT

Janet Elizabeth Gronert

Date 2/21/12 License # 44325

STATE PROJ. NO. 0702-116

BRIDGE NO. 07587

DRAWN BY B. SIMON
DESIGNED BY J. GRONERT
CHECKED BY L. ERICKSON
COMM. NO. 6962

SRF CONSULTING GROUP, INC.

BLUE EARTH COUNTY

NORTH ABUTMENT DETAILS
CSAH 12 OVER TH 14
(SHEET 2 OF 5)

SHEET B10 OF B43

10:59:50 AM
2/9/2012
N:\projects\6962\br\final\plan\6962_abt11.dgn

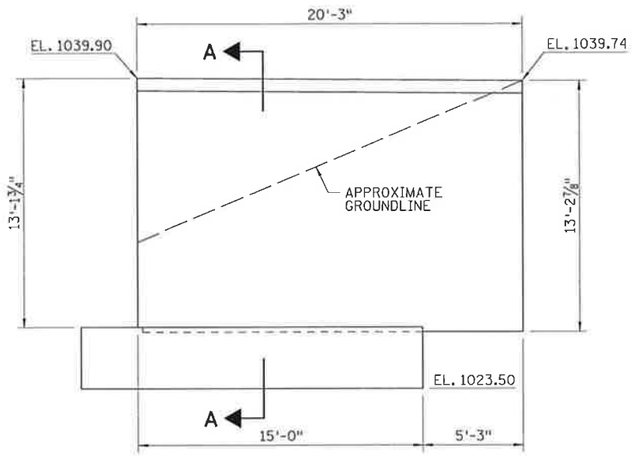

N.E. WINGWALL ELEVATION

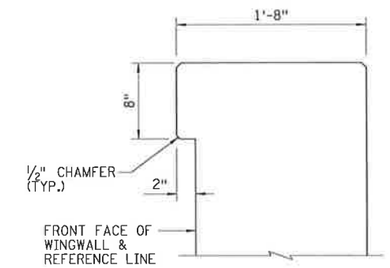

DETAIL 'A'

NOTES:

1. 4" NOMINAL DIA. PERFORATED PIPE, SEE DETAIL B910.
2. MEMBRANE WATERPROOFING SYSTEM.

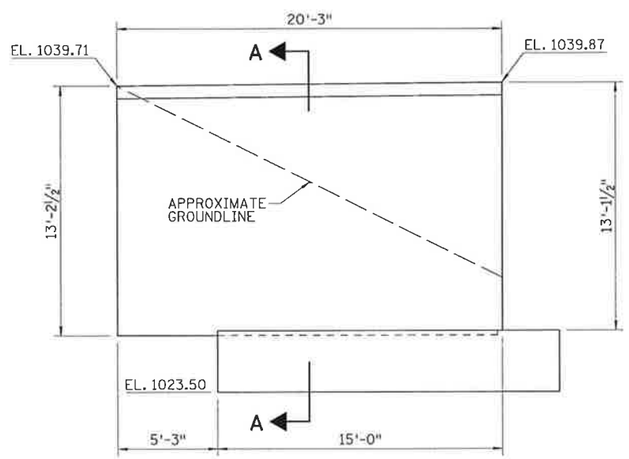

N.W. WINGWALL ELEVATION

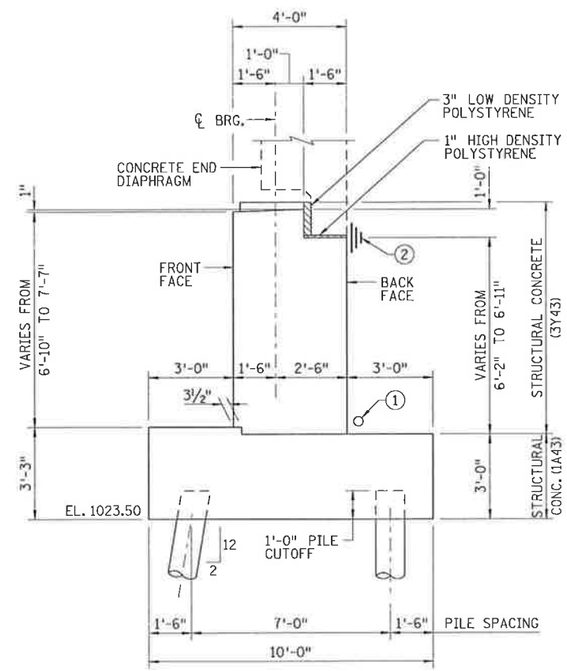

SECTION THRU ABUTMENT

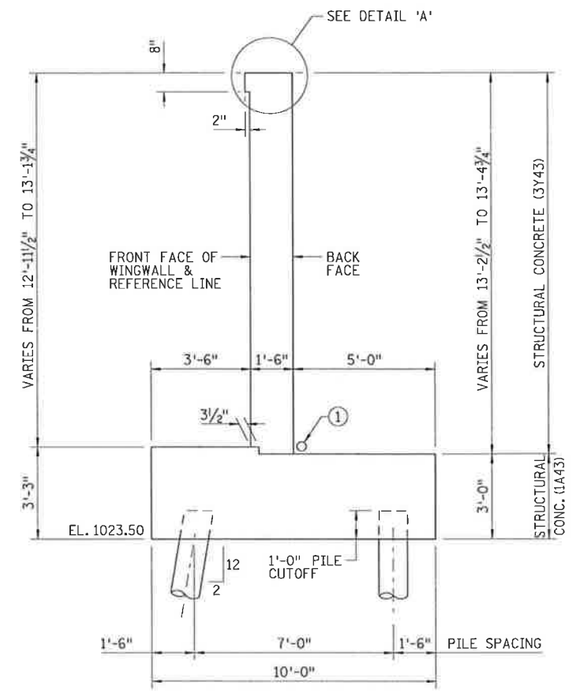

SECTION A-A

NO	DATE	BY	CKD	APPR	REVISION

...\br\final\plan\6962_abt12.dgn

I hereby certify that this plan, specification, or report was prepared by me or under my direct supervision and that I am a duly Licensed Professional Engineer under the laws of the State of Minnesota.

Print Name: JANET ELIZABETH GRONERT

Janet Elizabeth Gronert

Date 2/21/12 License # 44325

STATE PROJ. NO. 0702-116

BRIDGE NO. 07587

DRAWN BY B. SIMON
DESIGNED BY J. GRONERT
CHECKED BY L. ERICKSON
COMM. NO. 6962

SRF CONSULTING GROUP, INC.

BLUE EARTH COUNTY

NORTH ABUTMENT DETAILS
CSAH 12 OVER TH 14
(SHEET 3 OF 5)

SHEET B11 OF B43

10:59:51 AM
2/9/2012
H:\projects\6962\br\final\plan\6962_abt12.dgn

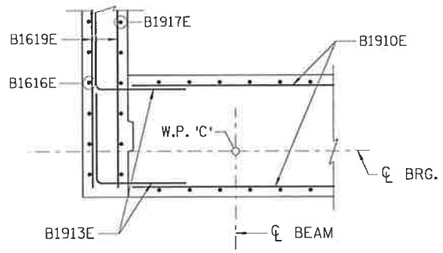

N.W. CORNER REINFORCEMENT DETAIL

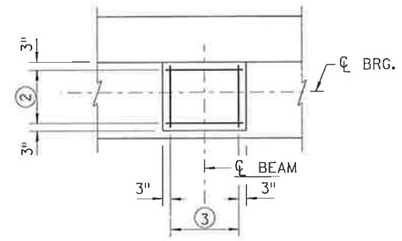

BRIDGE SEAT REINFORCEMENT DETAIL

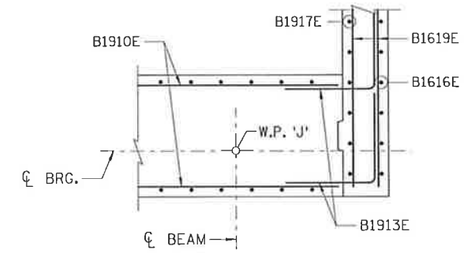

N.E. CORNER REINFORCEMENT DETAIL

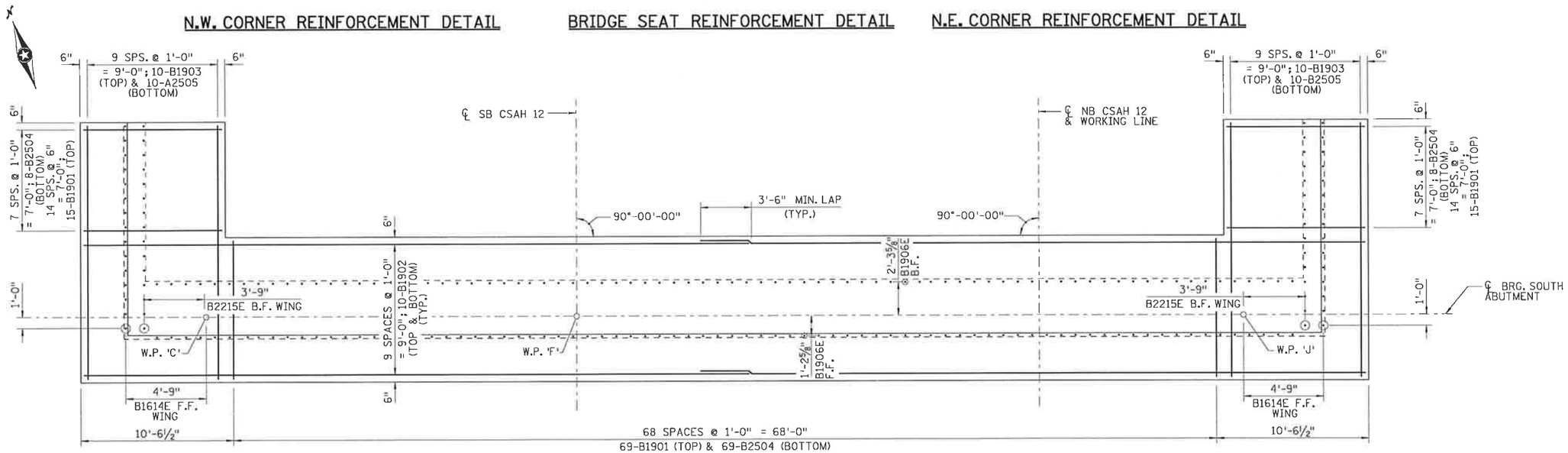

FOOTING REINFORCEMENT PLAN

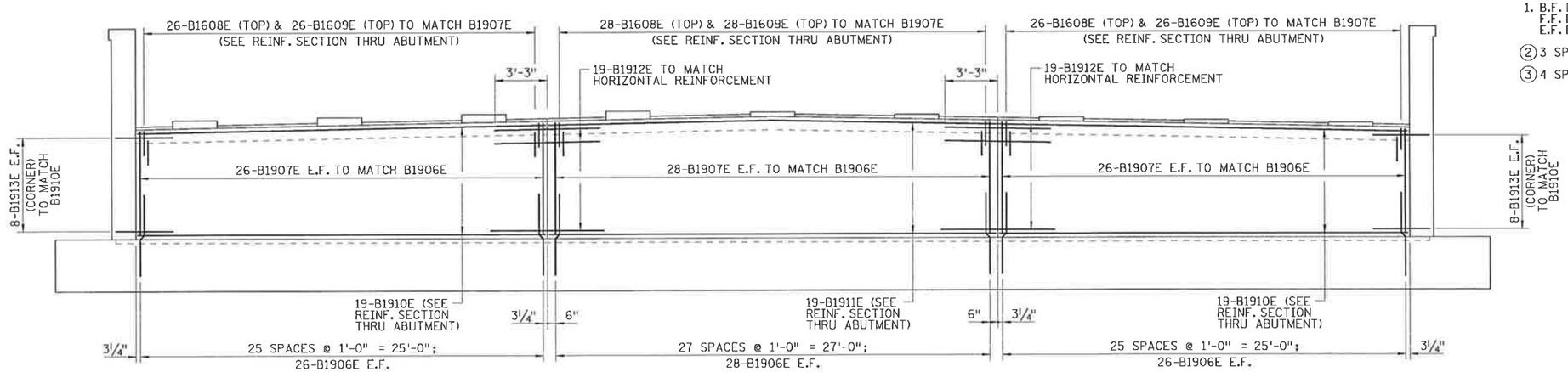

REINFORCEMENT ELEVATION

NOTES:

1. B.F. DENOTES BACK FACE.
   F.F. DENOTES FRONT FACE.
   E.F. DENOTES EACH FACE.

(2) 3 SPACES @ 7" = 1'-9"; 4-B1320E

(3) 4 SPACES @ 6¾" = 2'-3"; 5-B1321E

NO	DATE	BY	CKD	APPR	REVISION

...\br\final\plan\6962_abt13.dgn

I hereby certify that this plan, specification, or report was prepared by me or under my direct supervision and that I am a duly Licensed Professional Engineer under the laws of the State of Minnesota.

Print Name: JANET ELIZABETH GRONERT

Janet Elizabeth Gronert

Date 2/21/12 License # 44325

STATE PROJ. NO. 0702-116

BRIDGE NO. 07587

DRAWN BY B. SIMON
DESIGNED BY J. GRONERT
CHECKED BY L. ERICKSON
COMM. NO. 6962

SRF CONSULTING GROUP, INC.

BLUE EARTH COUNTY

NORTH ABUTMENT DETAILS
CSAH 12 OVER TH 14
(SHEET 4 OF 5)

SHEET B12 OF B43

10:59:52 AM
2/9/2012
h:\projects\6962\br\final\plan\6962_abt13.dgn

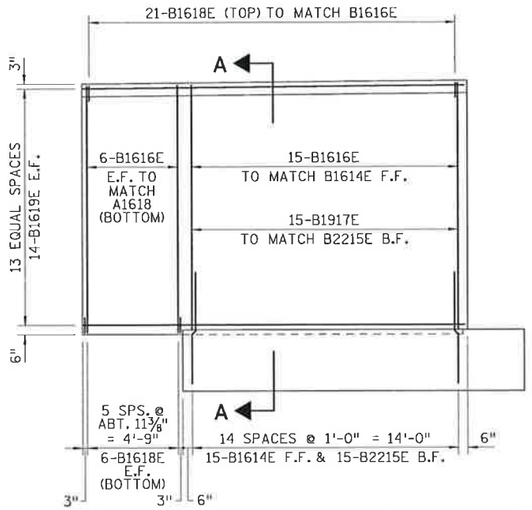

N.W. WINGWALL REINFORCEMENT ELEVATION

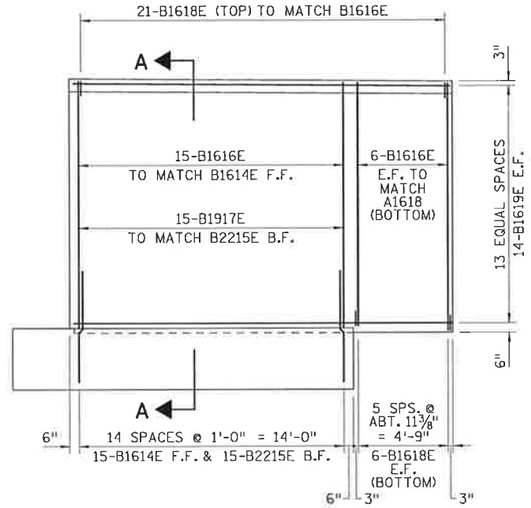

N.E. WINGWALL REINFORCEMENT ELEVATION

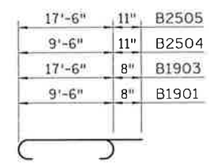

B1901, B1903, B2504 & B2505

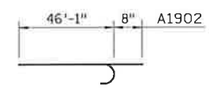

B1902

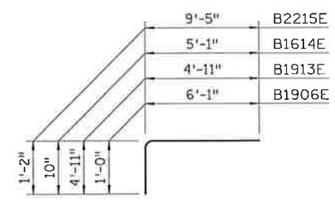

B1906E, B1913E, B1614E, & B2215E

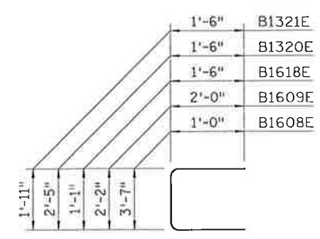

B1608E, B1609E & B1618E, B1320E & B1321E

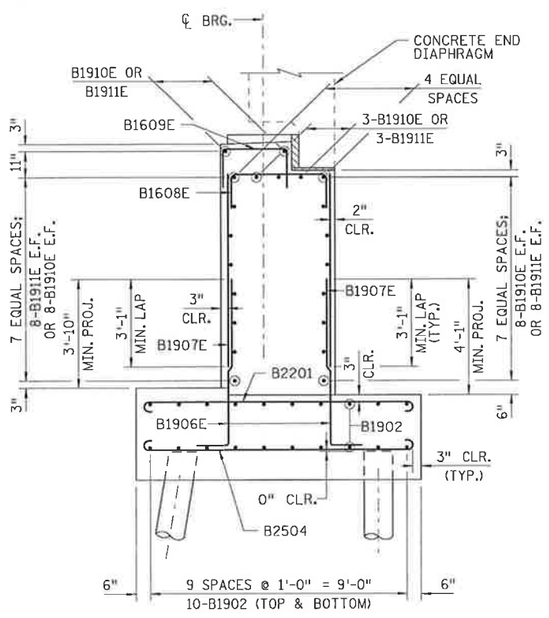

REINFORCEMENT SECTION THRU ABUTMENT

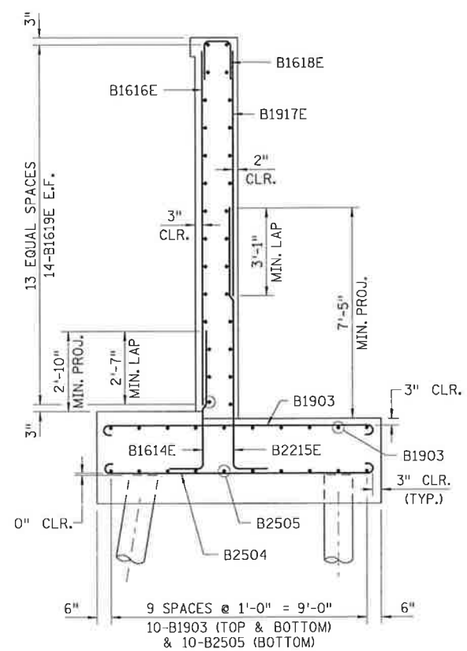

REINFORCEMENT SECTION A-A

BILL OF REINFORCEMENT: NORTH ABUTMENT

MARK	NO	LENGTH [FT - IN]	SHAPE	LOCATION
B1901	99	10 - 10	BENT	FOOTING TRANS TOP
B1902	40	46 - 9	BENT	FOOTING LONGIT TOP & BOTTOM
B1903	20	18 - 10	BENT	FOOTING LONGIT WING TOP
B2504	85	11 - 4	BENT	FOOTING TRANS BOTTOM
B2505	20	19 - 4	BENT	FOOTING LONGIT WING BOTTOM
B1906E	160	7 - 1	BENT	DOWEL
B1907E	160	6 - 0	STR	STEM VERT
B1608E	80	5 - 7	BENT	STEM CAP
B1609E	80	6 - 2	BENT	STEM CAP
B1910E	38	25 - 2	STR	HORIZ.
B1911E	19	27 - 8	STR	HORIZ.
B1912E	38	6 - 6	STR	HORIZ. DOWEL
B1913E	32	9 - 10	BENT	CORNER
B1614E	30	5 - 11	BENT	WING DOWEL FF
B2215E	30	10 - 7	BENT	WING DOWEL BF
B1616E	54	12 - 7	STR	WW VERT FF & CANT.
B1917E	30	8 - 11	STR	WW VERT BF
B1618E	54	4 - 1	BENT	WW CAP
B1619E	56	19 - 11	STR	WW HORIZ EF
B1320E	36	5 - 5	BENT	BRG SEAT
B1321E	45	4 - 11	BENT	BRG SEAT
		-		

SUMMARY OF QUANTITIES : NORTH ABUTMENT

	ITEM	UNIT	QUANTITY
	STRUCTURAL CONCRETE (1A43)	CU. YD.	121
	STRUCTURAL CONCRETE (3Y43)	CU. YD.	114
	REINFORCEMENT BARS	POUND	8590
	REINFORCEMENT BARS (EPOXY COATED)	POUND	10820
4	C-I-P CONCRETE PILING DELIVERED 12"	LIN. FT.	5040
4	C-I-P CONCRETE PILING DRIVEN 12"	LIN. FT.	5040
	C-I-P CONC TEST PILES 135' LONG 12"	EACH	2
	PILE REDRIVING	EACH	2
3	PILE ANALYSIS	EACH	2
5	PILE COATING	LIN. FT	3080
2	MEMBRANE WATERPROOFING SYSTEM	LIN. FT.	120
2	1" HIGH DENSITY POLYSTYRENE	LIN. FT.	72
2	3" LOW DENSITY POLYSTYRENE	LIN. FT.	72
	ARCHITECTURAL SURFACE FINISH (SINGLE COLOR)	SQ. FT.	520
	ARCHITECTURAL CONCRETE TEXTURE (FRACTURED FIN)	SQ. FT.	520

NOTES:

1. B.F. DENOTES BACK FACE.
   E.F. DENOTES EACH FACE.
   F.F. DENOTES FRONT FACE.

(2) INCLUDED IN PAYMENT FOR STRUCTURAL CONCRETE (3Y43).

(3) SEE SPECIAL PROVISIONS.

(4) DOES NOT INCLUDE TEST PILES.

(5) INCLUDES TEST PILES, SEE SPECIAL PROVISIONS.

NO	DATE	BY	CKD	APPR	REVISION

...\br\final\plan\6962_abt14.dgn

I hereby certify that this plan, specification, or report was prepared by me or under my direct supervision and that I am a duly Licensed Professional Engineer under the laws of the State of Minnesota.

Print Name: JANET ELIZABETH GRONERT

Janet Elizabeth Gronert

Date 2/21/12 License # 44325

STATE PROJ. NO. 0702-116

BRIDGE NO. 07587

DRAWN BY B. SIMON
DESIGNED BY J. GRONERT
CHECKED BY L. ERICKSON
COMM. NO. 6962

SRF CONSULTING GROUP, INC.

BLUE EARTH COUNTY

NORTH ABUTMENT DETAILS
CSAH 12 OVER TH 14
(SHEET 5 OF 5)

SHEET B13 OF B43

10:59:53 AM
2/9/2012
H:\projects\6962\br\final\plan\6962_abt14.dgn

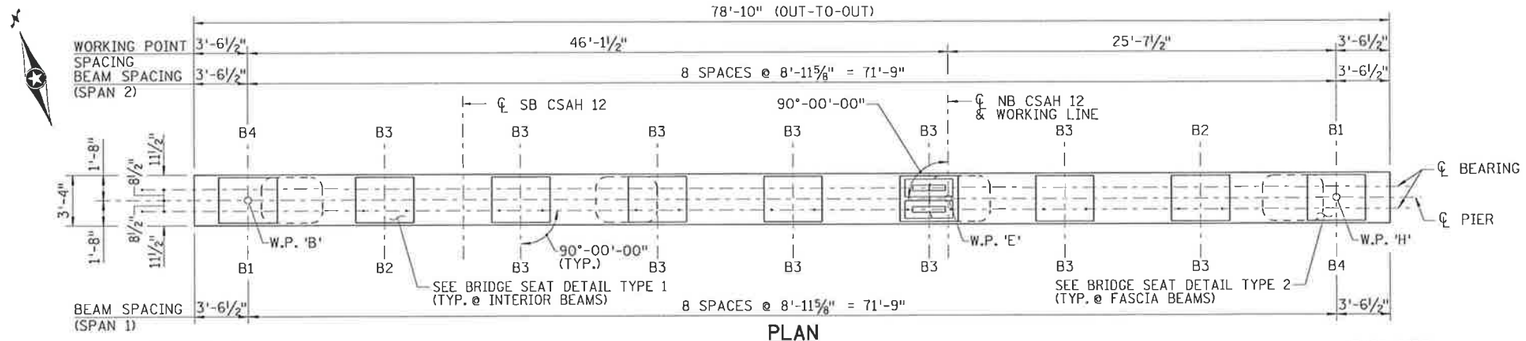

PLAN

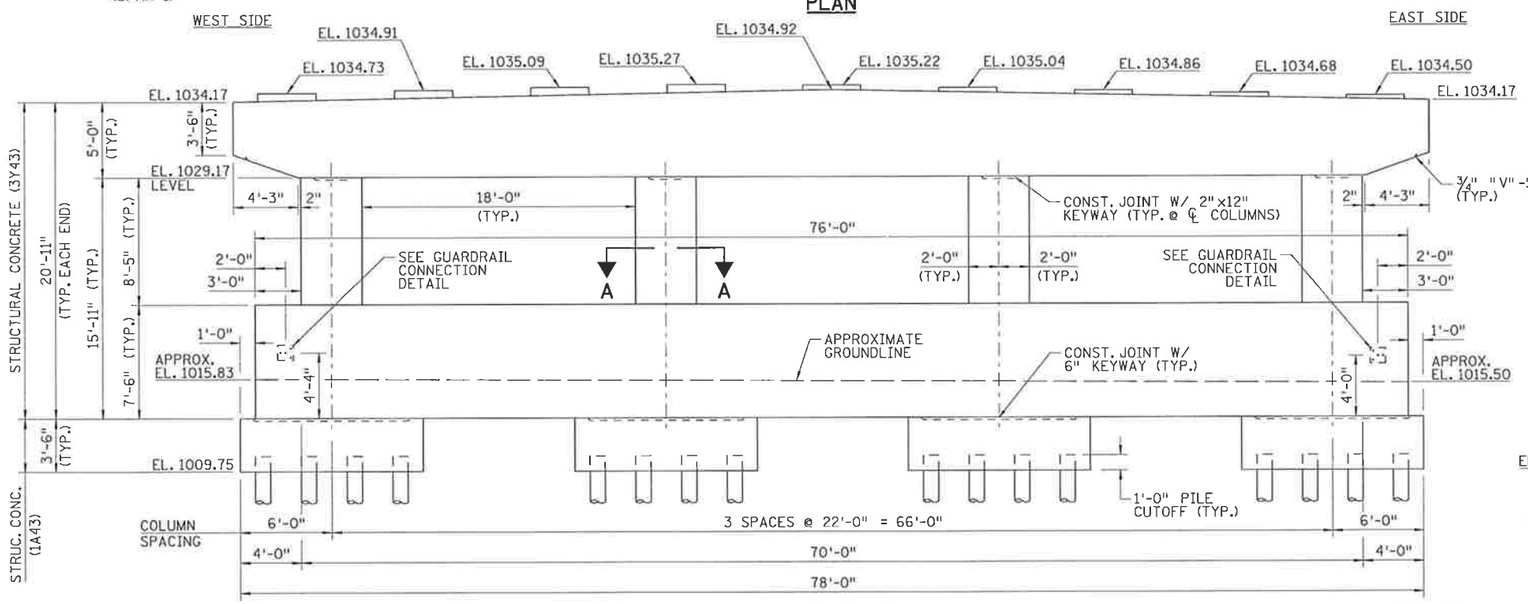

ELEVATION

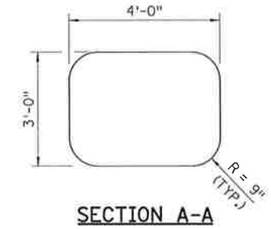

SECTION A-A

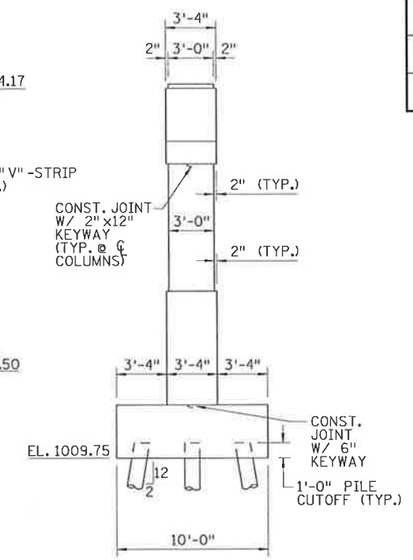

END VIEW

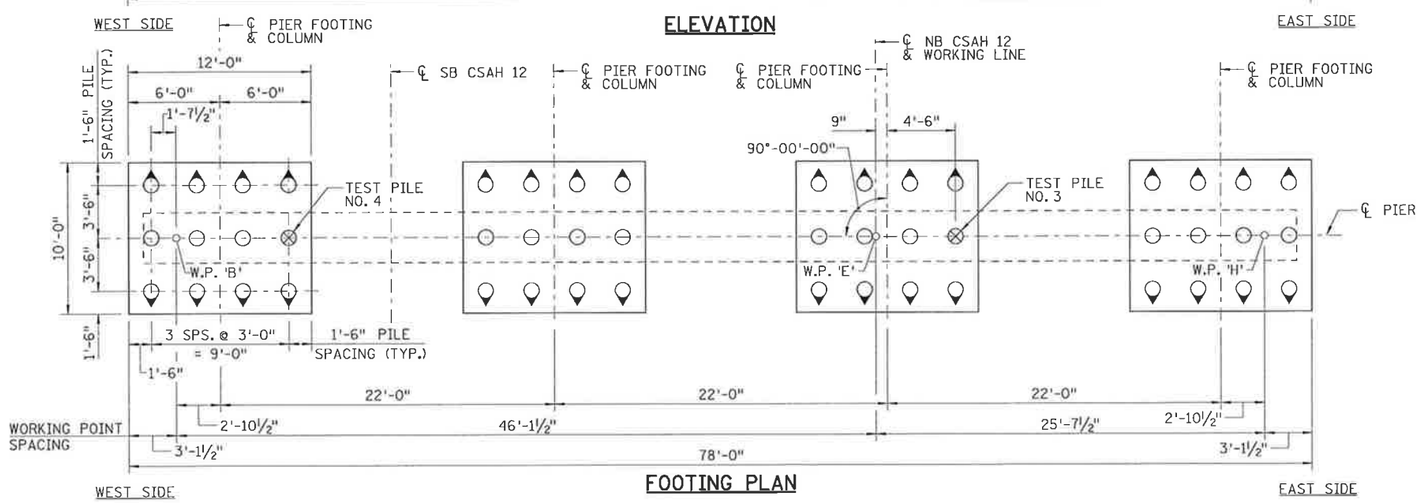

FOOTING PLAN

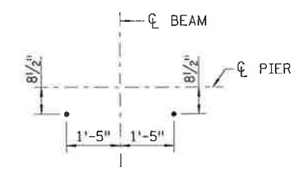

ANCHOR ROD LAYOUT

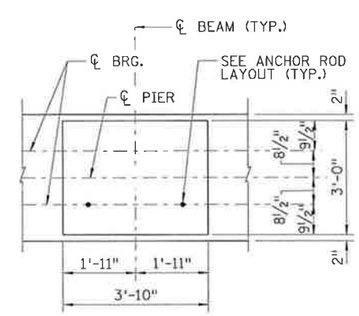

BRIDGE SEAT DETAIL TYPE 1

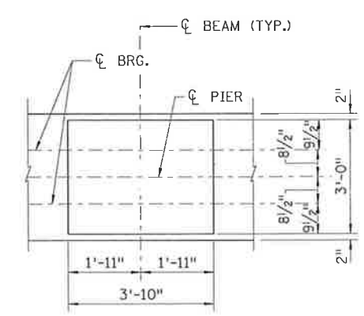

BRIDGE SEAT DETAIL TYPE 2

PIER REQUIRED NOMINAL PILE BEARING RESISTANCE R_n - TONS/PILE

FIELD CONTROL METHOD	Φ dyn	* R_n
Mn/DOT NOMINAL RESISTANCE FORMULA	0.40	249.0
PDA	0.65	153.2

* R_n = FACTORED DESIGN LOAD/Φ dyn

PIER COMPUTED PILE LOAD - TONS/PILE

FACTORED DEAD LOAD	49.9
FACTORED LIVE LOAD	21.6
FACTORED OVERTURNING	31.4
* FACTORED DESIGN LOAD = PILE BEARING RESISTANCE	102.8

* BASED ON STRENGTH 1a LOAD COMBINATION

PILE NOTES:

2 - 12" C-I-P TEST PILES, 125 FEET LONG.
46 - 12" C-I-P PILES, ESTIMATED LENGTH 110 FEET LONG.
48 - 12" C-I-P PILES REQUIRED FOR PIER.

PILE SPACING SHOWN IS AT BOTTOM OF FOOTING.

PILES MARKED THUS ◯➢ SHALL BE BATTERED 2" PER FOOT IN THE DIRECTION SHOWN.

FOR PILE SPLICE, SEE DETAIL B201.

PILES SHALL HAVE A NOMINAL OUSIDE DIAMETER OF 12" AND WALL THICKNESS OF 0.25 INCHES.

NOMINAL PILE BEARING RESISTANCE SHALL BE DETERMINED BY THE USE OF A PILE DRIVING ANALYZER (PDA). PILE LENGTHS SHOWN ARE BASED ON USING A PDA.

DRIVE-FIT PILE SPLICES ARE NOT ALLOWED.

NO	DATE	BY	CKD	APPR	REVISION

...\br\final\plan\6962_pir01.dgn

I hereby certify that this plan, specification, or report was prepared by me or under my direct supervision and that I am a duly Licensed Professional Engineer under the laws of the State of Minnesota.

Print Name: JANET ELIZABETH GRONERT
Janet Elizabeth Gronert
Date 2/21/12 License # 44325

STATE PROJ. NO. 0702-116
BRIDGE NO. 07587

DRAWN BY B. SIMON
DESIGNED BY J. GRONERT
CHECKED BY L. ERICKSON
COMM. NO. 6962

SRF CONSULTING GROUP, INC.

BLUE EARTH COUNTY
PIER DETAILS
CSAH 12 OVER TH 14
(SHEET 1 OF 3)

SHEET B14 OF B43

10:59:53 AM
2/9/2012
h:\projects\6962\br\final\plan\6962_pir01.dgn

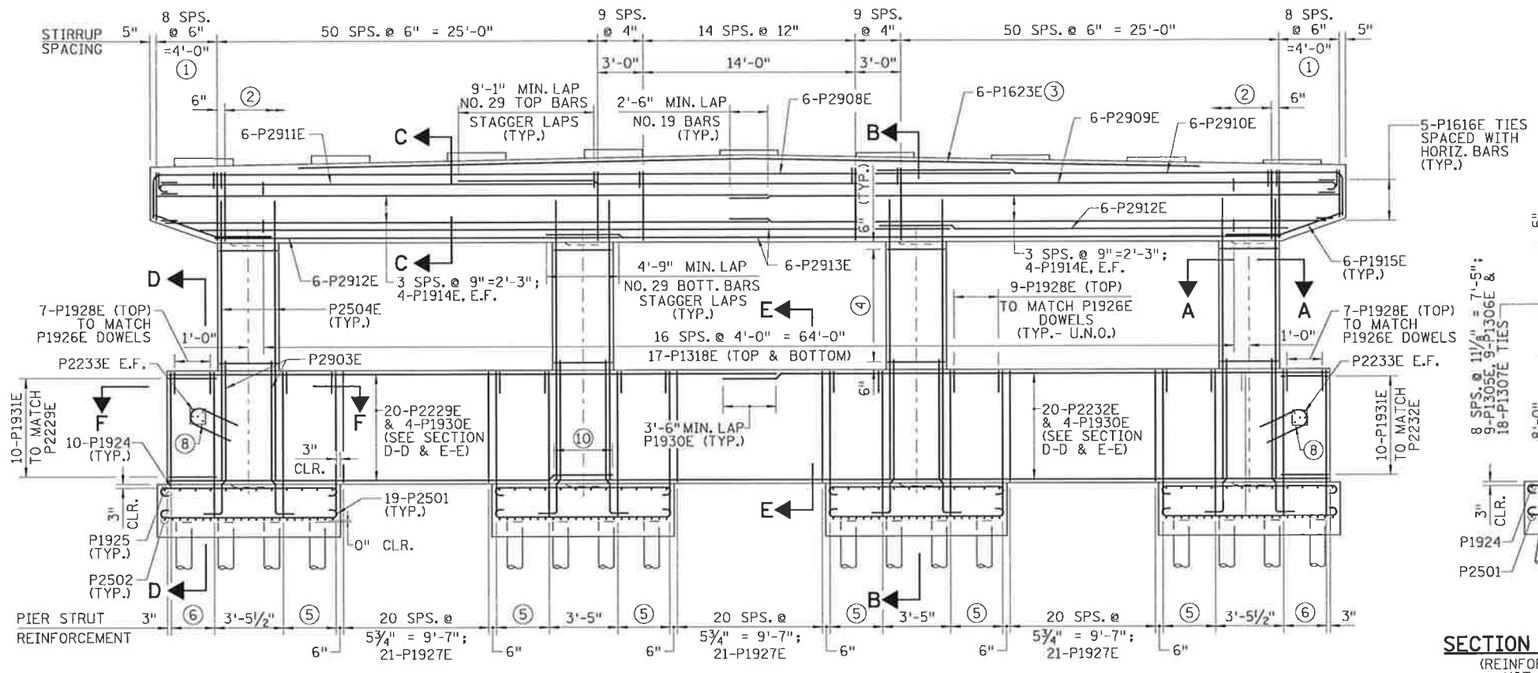

REINFORCEMENT ELEVATION

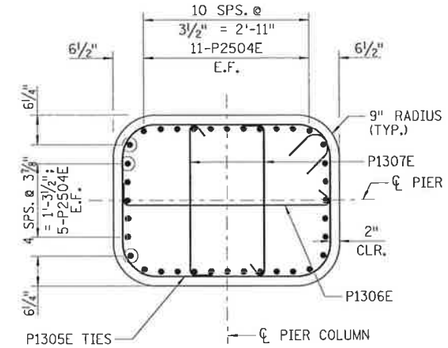

SECTION A-A REINFORCEMENT

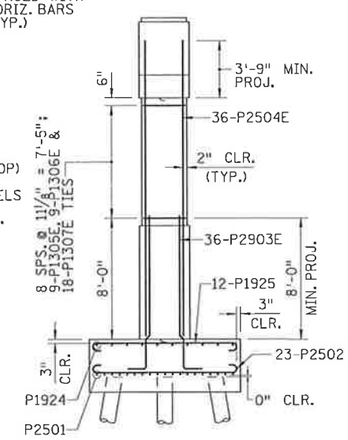

SECTION B-B REINFORCEMENT

(REINFORCEMENT IN PIER STRUT NOT SHOWN FOR CLARITY)

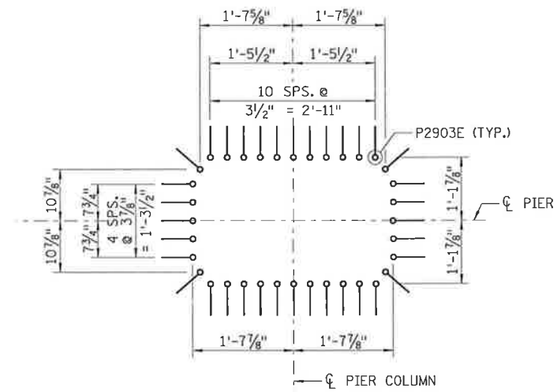

DOWEL BAR LAYOUT

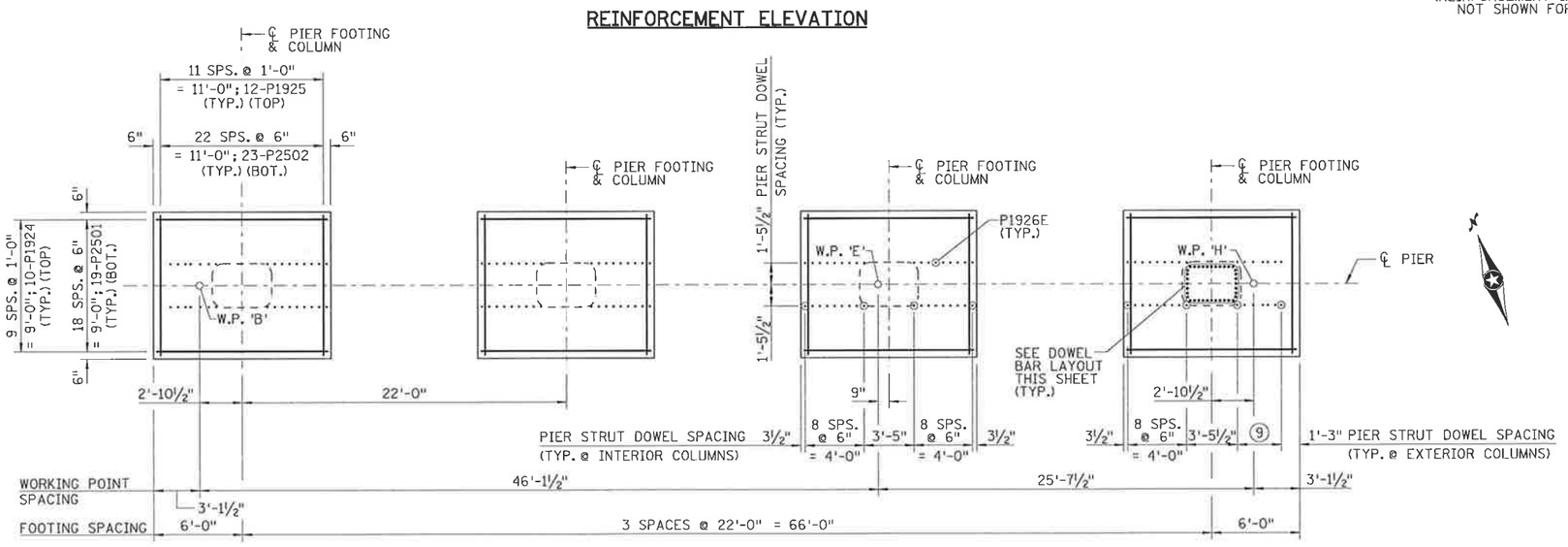

FOOTING REINFORCEMENT PLAN

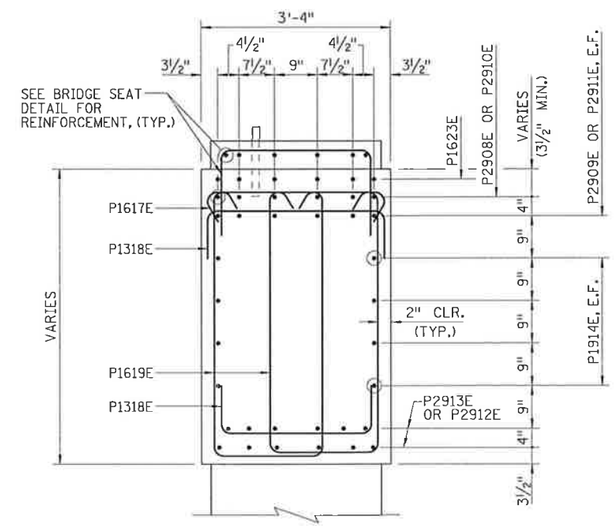

SECTION C-C REINFORCEMENT

NOTES:

1. 18-P1620E, 9-P1617E
2. 262-P1619E, 131-P1617E
3. CENTER OVER PIER.
4. 8 SPS. @ 11⅛" = 7'-5"; 9-P1305E, 9-P1306E & 18-P1307E TIES (TYP.).
5. 8 SPS. @ 6" = 4'-0"; 9-P1926E E.F.
6. SEE SECTION F-F FOR SPACING; 7-P1926E E.F.
7. E.F. DENOTES EACH FACE. U.N.O. DENOTES UNLESS NOTED OTHERWISE
8. SEE GUARDRAIL CONNECTION DETAIL.
9. SEE SECTION F-F FOR SPACING.
10. 3'-10" MIN. LAP - P2229E & P2232E BARS STAGGER LAPS (TYP.)

NO	DATE	BY	CKD	APPR	REVISION

...\br\final\plan\6962_plr02.dgn

I hereby certify that this plan, specification, or report was prepared by me or under my direct supervision and that I am a duly Licensed Professional Engineer under the laws of the State of Minnesota.

Print Name: JANET ELIZABETH GRONERT

Janet Elizabeth Gronert

Date 2/21/12 License # 44325

STATE PROJ. NO. 0702-116

BRIDGE NO. 07587

DRAWN BY B. SIMON
DESIGNED BY J. GRONERT
CHECKED BY L. ERICKSON
COMM. NO. 6962

SRF CONSULTING GROUP, INC.

BLUE EARTH COUNTY

PIER DETAILS
CSAH 12 OVER TH 14
(SHEET 2 OF 3)

SHEET B15 OF B43

10:59:54 AM
2/9/2012
P:\projects\6962\br\final\plan\6962_plr02.dgn

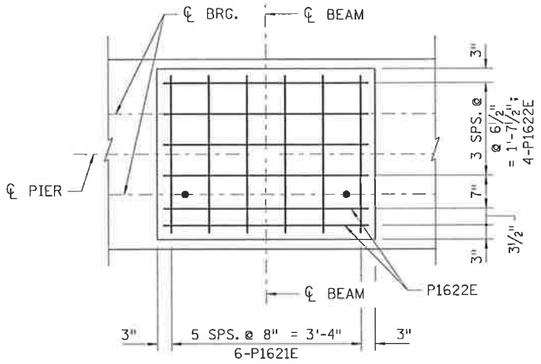

BRIDGE SEAT TYPE 1 REINFORCEMENT DETAIL

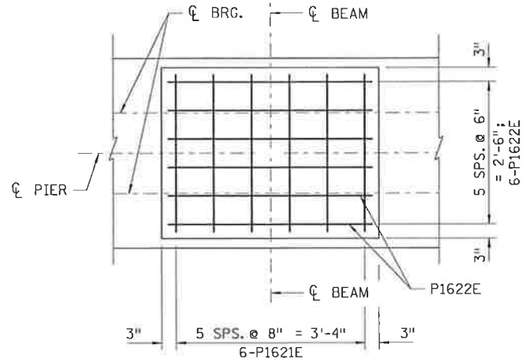

BRIDGE SEAT TYPE 2 REINFORCEMENT DETAIL

SUMMARY OF QUANTITIES : PIER

	ITEM	UNIT	QUANTITY
	STRUCTURAL CONCRETE (1A43)	CU. YD.	63
	STRUCTURAL CONCRETE (3Y43)	CU. YD.	139
	REINFORCEMENT BARS	POUND	7050
	REINFORCEMENT BARS (EPOXY COATED)	POUND	36490
1 2	C-I-P CONCRETE PILING DELIVERED 12"	LIN. FT.	5060
1 2	C-I-P CONCRETE PILING DRIVEN 12"	LIN. FT.	5060
2	C-I-P CONC TEST PILES 125' LONG 12"	EACH	2
2	PILE REDRIVING	EACH	2
2	PILE ANALYSIS	EACH	2

BILL OF REINFORCEMENT: PIER

MARK	NO	LENGTH [FT - IN]	SHAPE	LOCATION
P2501	76	13 - 4	BENT	FOOTING (BOTTOM)
P2502	92	11 - 4	BENT	FOOTING (BOTTOM)
P2903E	144	11 - 11	BENT	DOWEL
P2504E	144	19 - 8	STR	COLUMN VERT
P1305E	36	12 - 2	BENT	COLUMN TIE
P1306E	36	4 - 5	BENT	TIE
P1307E	72	3 - 5	BENT	TIE
P2908E	6	60 - 0	BENT	TOP CAP HORIZ
P2909E	6	60 - 0	BENT	TOP CAP HORIZ
P2910E	6	33 - 5	BENT	TOP CAP HORIZ
P2911E	6	30 - 1	BENT	TOP CAP HORIZ
P2912E	12	28 - 2	STR	BOTTOM CAP HORIZ
P2913E	12	50 - 2	STR	BOTTOM CAP HORIZ
P1914E	16	40 - 6	STR	SIDE CAP HORIZ
P1915E	12	6 - 9	BENT	BOTTOM CAP CHAMFER
P1616E	10	6 - 6	BENT	END CAP
P1617E	149	4 - 0	BENT	CAP CLOSED TIES
P1318E	34	5 - 0	BENT	CAP SUPPORT BARS
P1619E	262	12 - 2	BENT	STIRRUPS
P1620E	4 SERIES	9 - 6	BENT	STIRRUPS
	OF 9	12 - 0		
P1621E	54	5 - 8	BENT	BRG SEAT
P1622E	54	6 - 6	BENT	BRG SEAT
P1623E	6	60 - 0	STR	TOP CAP HORIZ
P1924	40	12 - 10	BENT	FOOTING (TOP)
P1925	48	10 - 10	BENT	FOOTING (TOP)
P1926E	136	10 - 8	BENT	STRUT DOWEL
P1927E	63	21 - 8	BENT	STRUT VERTICAL
P1928E	68	6 - 0	BENT	STRUT TOP
P2229E	20	29 - 0	STR	STRUT HORIZ.
P1930E	8	40 - 7	STR	STRUT HORIZ.
P1931E	20	9 - 0	BENT	STRUT ENDS
P2232E	20	50 - 6	STR	STRUT HORIZ.
P2233E	4	6 - 6	BENT	GUARDRAIL CONN.

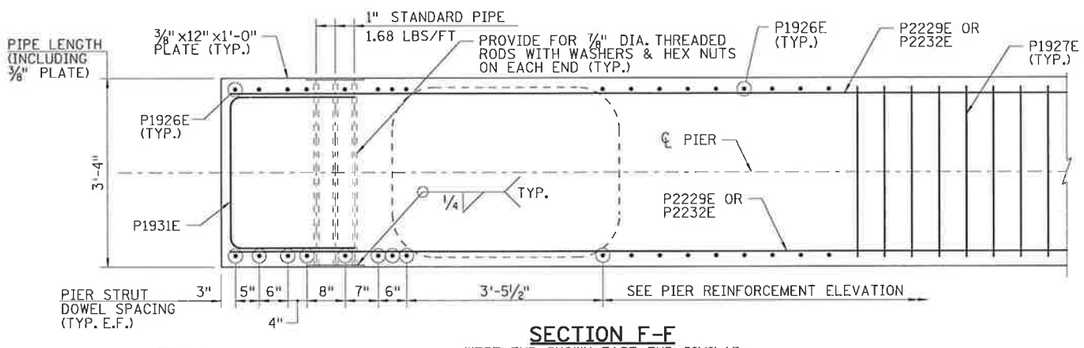

SECTION F-F

WEST END SHOWN, EAST END SIMILAR
(COLUMN REINFORCEMENT NOT SHOWN FOR CLARITY)

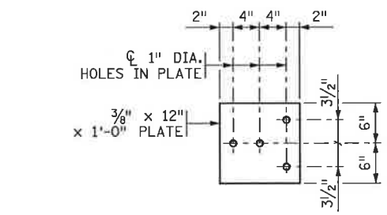

GUARDRAIL CONNECTION DETAIL

GALVANIZE AFTER FABRICATION PER Mn/DOT SPEC. 3394
ESTIMATED WEIGHT = 22 LBS

NOTES:

1. DOES NOT INCLUDE TEST PILES.
2. SEE SPECIAL PROVISIONS.
3. GUARDRAIL CONNECTION TO BE STRUCTURAL STEEL, MN/DOT SPEC. 3306.
4. GUARDRAIL CONNECTION TO BE CONSIDERED INCIDENTAL TO "STRUCTURAL CONCRETE (3Y43)".
5. E.F. DENOTES EACH FACE.
6. THREADED RODS SHALL COMPLY WITH MnDOT SPEC. 3306. GALVANIZED PER MnDOT SPEC. 3394. INCIDENTAL TO STRCUTURAL CONCRETE (3Y43).

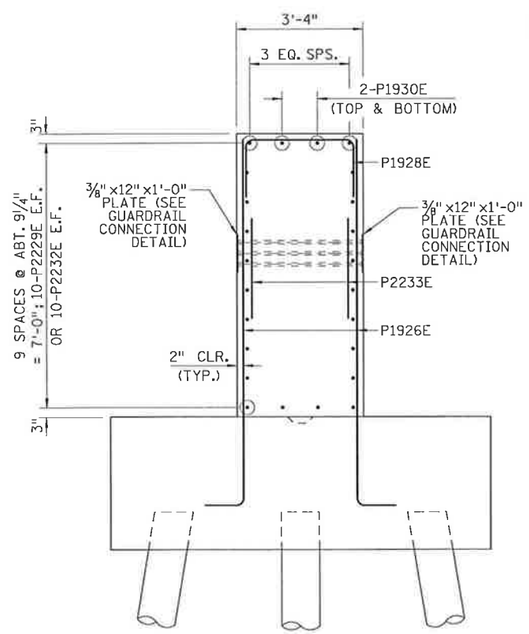

SECTION D-D

WEST END GUARDRAIL CONNECTION SHOWN, EAST END SIMILAR
(FOOTING REINFORCEMENT NOT SHOWN FOR CLARITY)

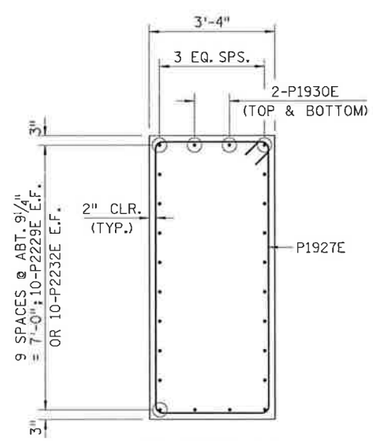

SECTION E-E

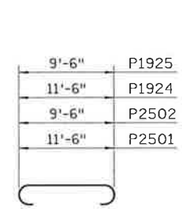

P2501, P2502
P1924 & P1925

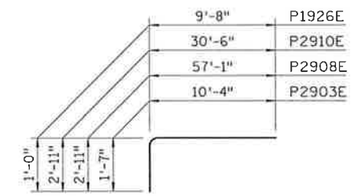

P2903E, P2908E, P2910E
& P1926E

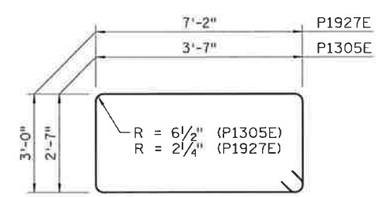

P1305E & P1927E

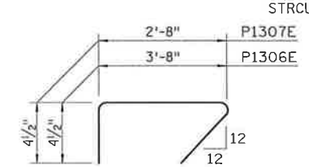

P1306E & P1307E

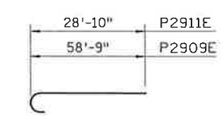

P2909E & P2911E

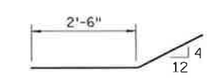

P1915E

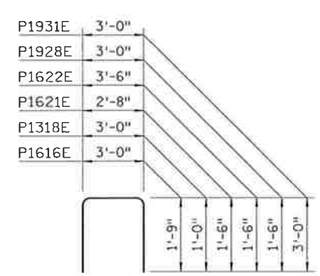

P1616E, P1318E, P1621E, P1622E,
P1928E & P1931E

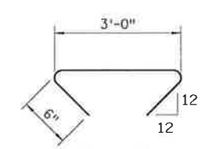

P1617E

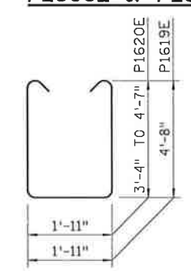

P1619E & P1620E

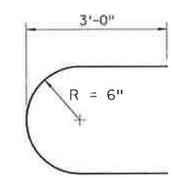

P2233E

NO	DATE	BY	CKD	APPR	REVISION

...\br\final\plan\6962_plr03.dgn

I hereby certify that this plan, specification, or report was prepared by me or under my direct supervision and that I am a duly Licensed Professional Engineer under the laws of the State of Minnesota.
Print Name: JANET ELIZABETH GRONERT
Janet Elizabeth Gronert
Date 2/12/12 License # 44325

STATE PROJ. NO. 0702-116
BRIDGE NO. 07587

DRAWN BY B. SIMON
DESIGNED BY J. GRONERT
CHECKED BY L. ERICKSON
COMM. NO. 6962

SRF CONSULTING GROUP, INC.

BLUE EARTH COUNTY
PIER DETAILS
CSAH 12 OVER TH 14
(SHEET 3 OF 3)

SHEET B16 OF B43

10:59:55 AM
2/9/2012
n:\projects\6962\br\final\plan\6962_plr03.dgn

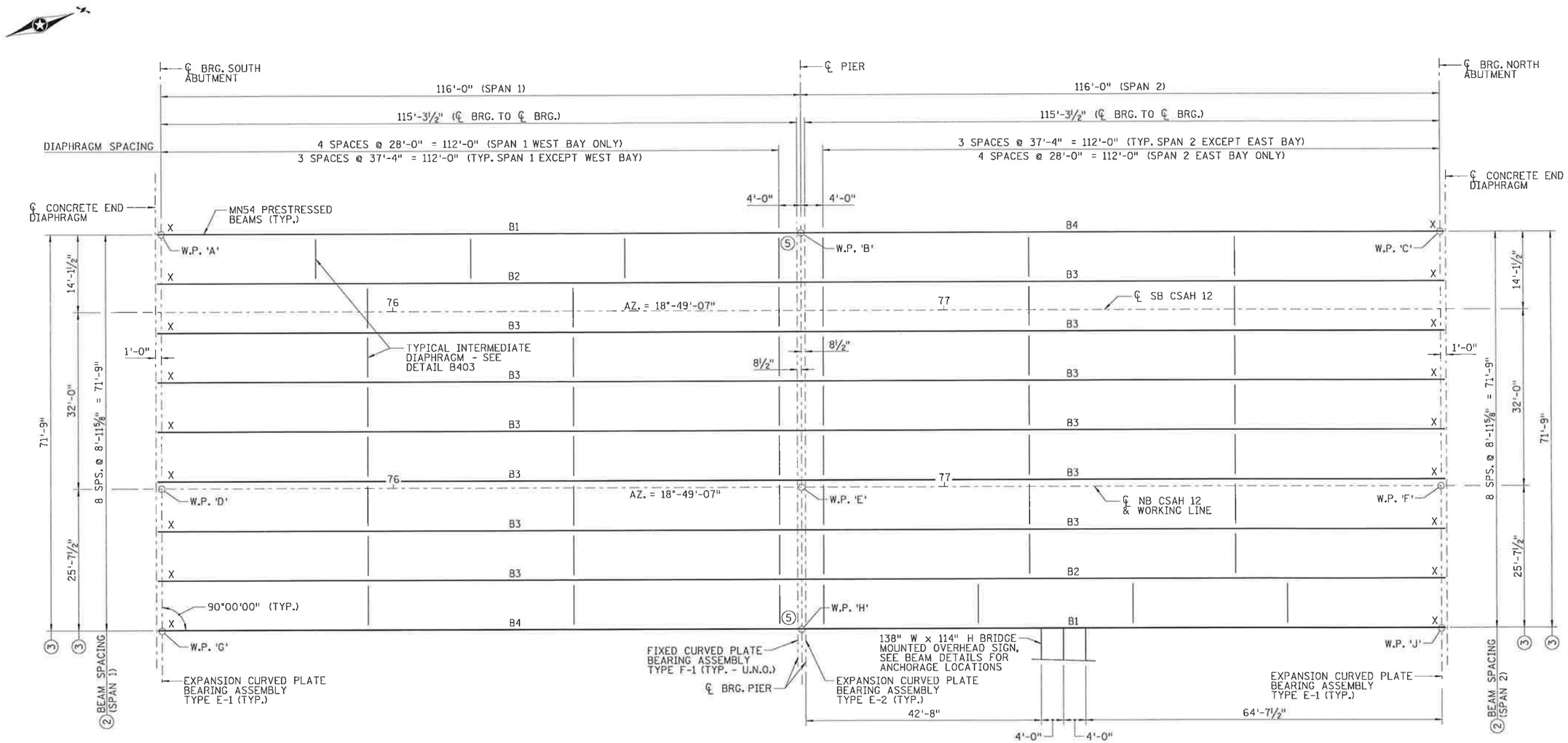

FRAMING PLAN

NOTES:

1. X DENOTES WHICH END OF BEAM IS TO BE MARKED WITH AN "X".

(2) DIMENSIONS ARE PERPENDICULAR TO ℄ OF BEAMS.

(3) DIMENSIONS ARE PERPENDICULAR TO WORKING LINE.

4. U.N.O. DENOTES UNLESS NOTED OTHERWISE.

(5) EXPANSION CURVED PLATE BEARING ASSEMBLY TYPE E-2

NO	DATE	BY	CKD	APPR	REVISION

...\br\final\plan\6962_sup01.dgn

I hereby certify that this plan, specification, or report was prepared by me or under my direct supervision and that I am a duly Licensed Professional Engineer under the laws of the State of Minnesota.

Print Name: JANET ELIZABETH GRONERT

Janet Elizabeth Gronert

Date 2/21/12 License # 44325

STATE PROJ. NO.	DRAWN BY
0702-116	B. SIMON
	DESIGNED BY J. GRONERT
BRIDGE NO. 07587	CHECKED BY L. ERICKSON
	COMM. NO. 6962

SRF CONSULTING GROUP, INC.

BLUE EARTH COUNTY

FRAMING PLAN

CSAH 12 OVER TH 14

SHEET B17 OF B43

10:59:56 AM
2/9/2012
n:\projects\6962\br\final\plan\6962_sup01.dgn

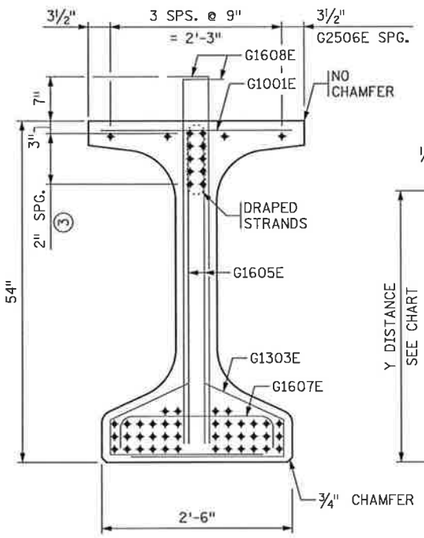

END VIEW

CUT STRANDS FLUSH WITH CONCRETE. PAINT ENDS WITH AN APPROVED GRAY EPOXY EXCEPT AS NOTED.

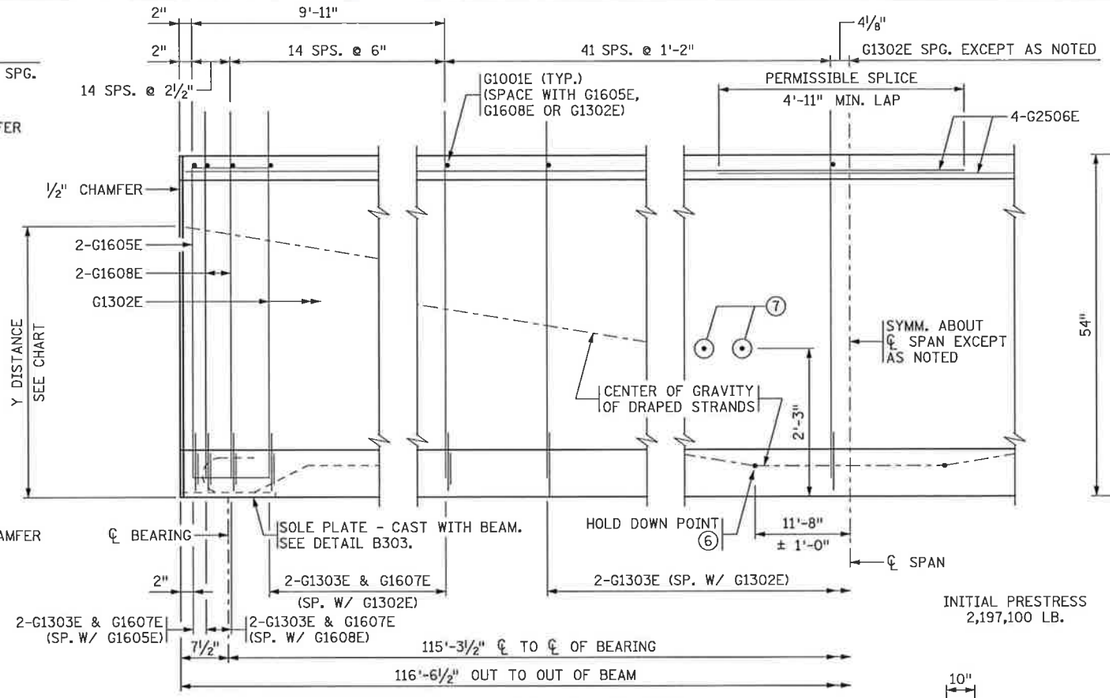

INITIAL PRESTRESS 2,197,100 LB.

BEAM ELEVATION

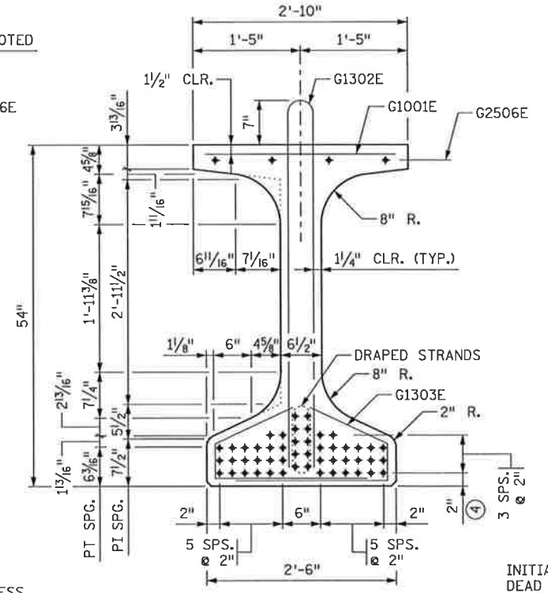

SECTION AT ℄ SPAN

Y DISTANCES (IN INCHES)			
	NO.	℄ SPAN	END
STRAIGHT STRANDS	40	4.40	
DRAPED STRANDS	10	7.00	47.00 ▫
TOTAL STRANDS	50	4.92	

Y = DISTANCE TO CENTER OF GRAVITY OF STRANDS FROM BOTTOM OF BEAM. ALL STRANDS SPACED 2" CENTER TO CENTER, HORIZONTALLY AND VERTICALLY, EXCEPT AS NOTED.

▫ A TOLERANCE OF ± 1" WILL BE PERMITTED IN THIS DIMENSION.

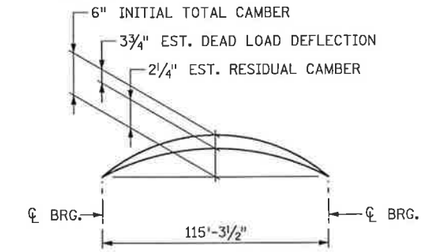

CAMBER DIAGRAM*

INITIAL CAMBER IS GIVEN AFTER DIAPHRAGMS ARE IN PLACE. DEAD LOAD DEFLECTION SHOWN IS FOR WEIGHT OF SLAB, WEARING COURSE, RAILING, SIDEWALK AND MEDIAN WHERE APPLICABLE. ENGINEER WILL TAKE ELEVATIONS AT TOP OF BEAMS AFTER ERECTION AND WILL ALLOW FOR DEFLECTION SHOWN TO ENABLE CONTRACTOR TO BUILD FORMS TO CORRECT GRADE AND SPECIFIED SLAB THICKNESS.
*(AVERAGED)

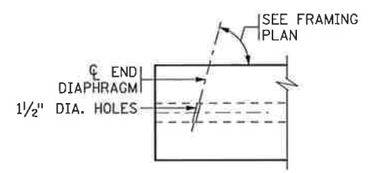

PLAN

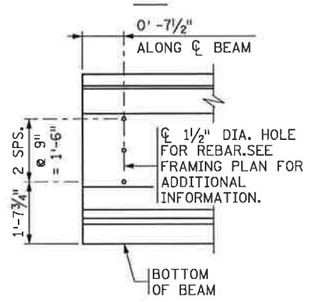

ELEVATION

CONCRETE END DIAPHRAGM

SEE SUPERSTRUCTURE DETAILS AND REINFORCEMENT FOR DIAPHRAGM DETAILS.

CALCULATED PRESTRESS LOSSES	
ELASTIC SHORTENING LOSS	25.8 KSI
LONG TERM LOSSES	26.0 KSI
TOTAL LOSSES	51.8 KSI

MINIMUM CONCRETE STRENGTH - K.S.I.	
① f'cI	② f'c
7.5 KSI	8.1 KSI

PRESTRESSING STRAND DIAMETER	
⑤	½" ☐
⑤	0.60" ☒

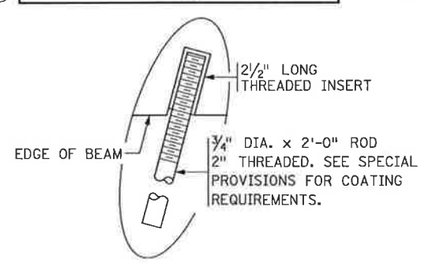

DETAIL "A"

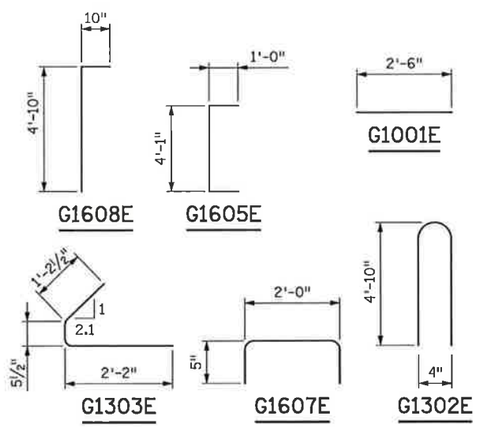

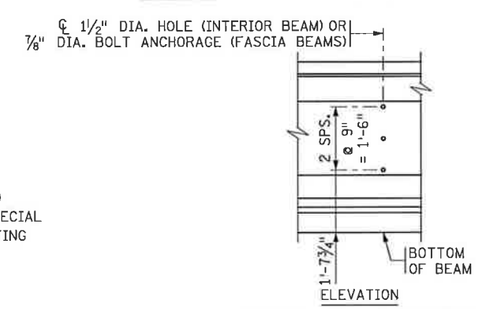

ELEVATION

STEEL INTERMEDIATE DIAPHRAGM

(SEE DETAIL B403 FOR DIAPHRAGM DETAILS)

GENERAL NOTES

TOPS OF BEAMS SHALL BE ROUGH FLOATED AND BROOMED TRANSVERSELY FOR BOND.

PROVIDE HANDLING HOOKS OR DEVICES AS REQUIRED BY CONTRACTOR.

EACH BEAM SHALL BE MARKED, SHOWING BRIDGE NUMBER, CASTING DATE, AND INDIVIDUAL IDENTIFICATION LETTERS AND NUMBERS. MARKINGS SHALL BE MADE ON THE FACE OF THE BEAM, NEAR THE END, SO LOCATED THAT THEY WILL BE EXPOSED AFTER THE END DIAPHRAGMS HAVE BEEN CAST. FASCIA BEAMS SHALL BE MARKED ON THE INSIDE FACE. ALL MARKINGS SHALL BE STENCILLED AND BE CLEARLY LEGIBLE. FOR LOCATION OF BEAMS, SEE FRAMING PLAN.

ALL MATERIAL AND WORK SHOWN OR NOTED ON THIS SHEET SHALL BE INCLUDED IN UNIT PRICE BID FOR PRESTRESSED CONCRETE BEAMS. SEE Mn/DOT SPEC. 2405.

SEE FRAMING PLAN FOR BEAM END MARKED "X" AND DIAPHRAGM SPACING.

APPROXIMATE WEIGHT OF BEAM IS 47 TONS.

AS AN ALTERNATE TO THE DIAPHRAGM ANCHORAGES SHOWN, THE CONTRACTOR MAY SUBMIT DETAILS OF A CAST-IN-PLACE ANCHORAGE TO THE ENGINEER FOR APPROVAL. ANCHORAGE MUST PROVIDE AN ULTIMATE PULL OUT STRENGTH OF 15 KIPS PER ANCHORAGE.

SHOP DRAWINGS SHALL SHOW LOCATIONS OF ALL BOLT INSERTS FOR BOTH OVERHEAD SIGN SUPPORT FRAMING AND DIAPHRAGMS.

① MINIMUM CONCRETE STRENGTH AT TIME OF PRESTRESS TRANSFER.

② MINIMUM CONCRETE STRENGTH WHEN BEAM CAN BE TRANSPORTED AND INSTALLED.

③ DRAPED STRANDS.

④ STRAIGHT STRANDS.

⑤ PRESTRESSING STRANDS SHALL BE 7-WIRE LOW RELAXATION STRAND, CONFORMING TO ASTM A416, GRADE 270.

⑥ CENTER OF GRAVITY OF HOLD DOWNS WHEN MULTIPLE HOLD DOWNS ARE USED.

⑦ FOR INFORMATION ONLY:
(5) - 1/2 " DIA. BOLT INSERTS FOR 138" W x 114" H OVERHEAD SIGN
SEE SHEET B43, OVERHEAD SIGN DETAILS, FOR LOCATIONS AND SPACING.

MODIFIED

FIG. 5-397.508

REVISED: 10-22-2009

APPROVED: OCTOBER 26, 2005

STATE BRIDGE ENGINEER

NO	DATE	BY	CKD	APPR	REVISION

...\br\final\plan\6962_pcb01.dgn

I hereby certify that this plan, specification, or report was prepared by me or under my direct supervision and that I am a duly Licensed Professional Engineer under the laws of the State of Minnesota.

Print Name: JANET ELIZABETH GRONERT

Date 2/21/12 License # 44325

STATE PROJ. NO. 0702-116

BRIDGE NO. 07587

DRAWN BY B. SIMON

DESIGNED BY J. GRONERT

CHECKED BY L. ERICKSON

COMM. NO. 6962

SRF CONSULTING GROUP, INC.

BLUE EARTH COUNTY

MN54" PRESTRESSED CONCRETE BEAM
CSAH 12 OVER TH 14

SHEET B18 OF B43

10:59:56 AM
2/9/2012
n:\projects\6962\br\final\plan\6962_pcb01.dgn

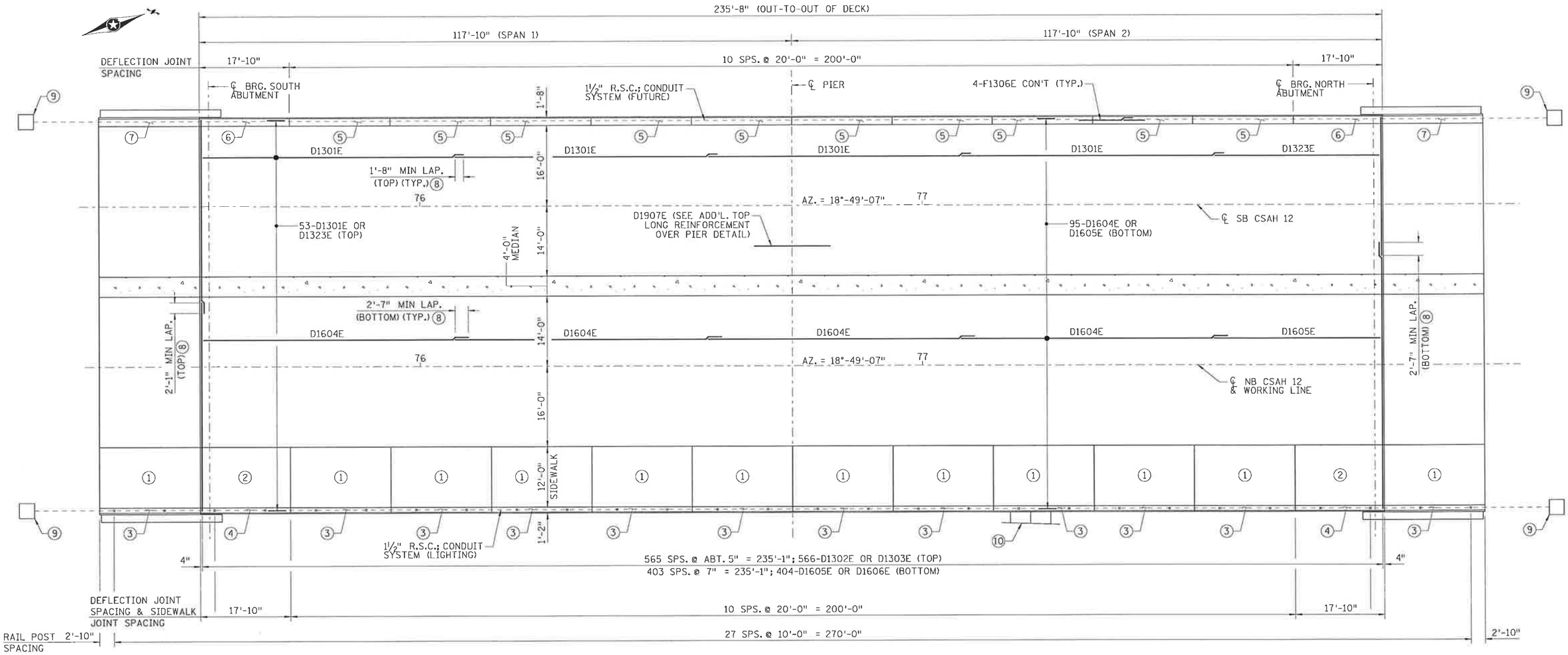

BRIDGE DECK LAYOUT

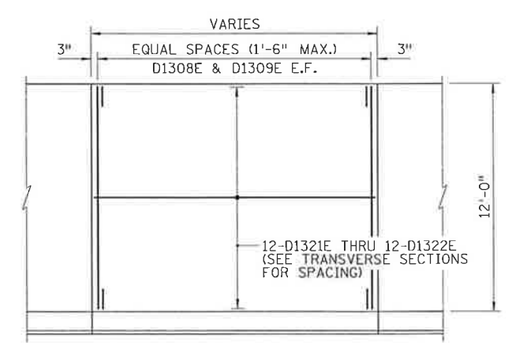

SIDEWALK REINFORCEMENT PLAN DETAIL

NOTES:

1. 12-D1322E, 14-D1308E, 28-D1309E.
2. 12-D1321E, 13-D1308E, 26-D1309E.
3. 27-R1601E, 8-R1302E, 1-R2204E.
4. 22-R1601E, 8-R1303E.
5. 4-F1308E, 22-F1601E, 22-F1602E.
6. 4-F1309E, 20-F1601E, 20-F1602E.
7. 2-F1307E, 2-F1308E, 26-F1601E, 1-F2203E, 24-F1602E, 1-F1604E, 1-F1605E.
8. STAGGER LAPS.
9. TERMINATE CONDUIT IN HANDHOLE/ PULLBOX IN SHOULDER AREA AT END OF BRIDGE.
10. 138" W x 114" H BRIDGE MOUNTED OVERHEAD SIGN.

NO	DATE	BY	CKD	APPR	REVISION

...\br\final\plan\6962_sup02.dgn

I hereby certify that this plan, specification, or report was prepared by me or under my direct supervision and that I am a duly Licensed Professional Engineer under the laws of the State of Minnesota.

Print Name: JANET ELIZABETH GRONERT

Janet Elizabeth Gronert

Date 2/21/12 License # 44325

STATE PROJ. NO. 0702-116

BRIDGE NO. 07587

DRAWN BY B. SIMON
DESIGNED BY J. GRONERT
CHECKED BY L. ERICKSON
COMM. NO. 6962

SRF CONSULTING GROUP, INC.

BLUE EARTH COUNTY

BRIDGE DECK DETAILS
CSAH 12 OVER TH 14
(SHEET 1 OF 5)

SHEET B19 OF B43

10:59:57 AM
2/9/2012
h:\projects\6962\br\final\plan\6962_sup02.dgn

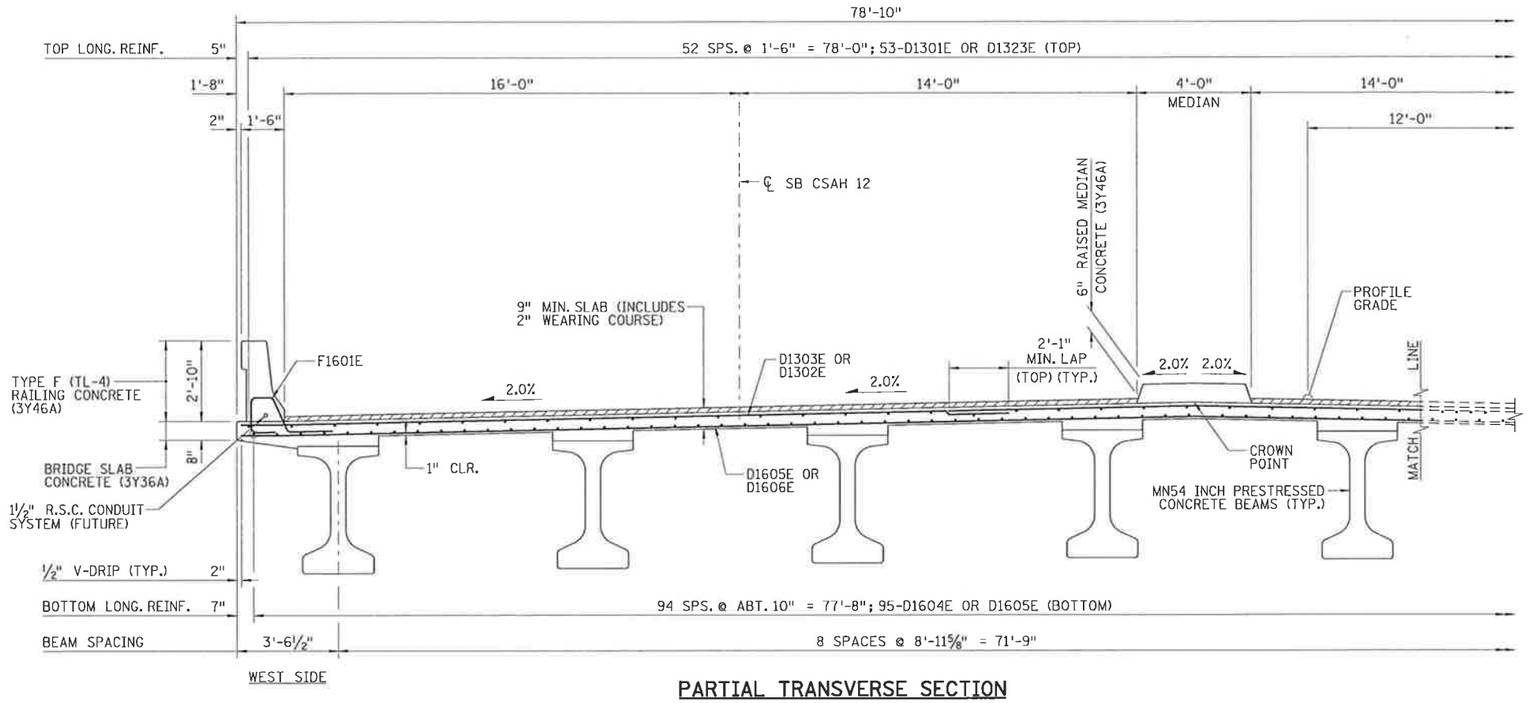

PARTIAL TRANSVERSE SECTION

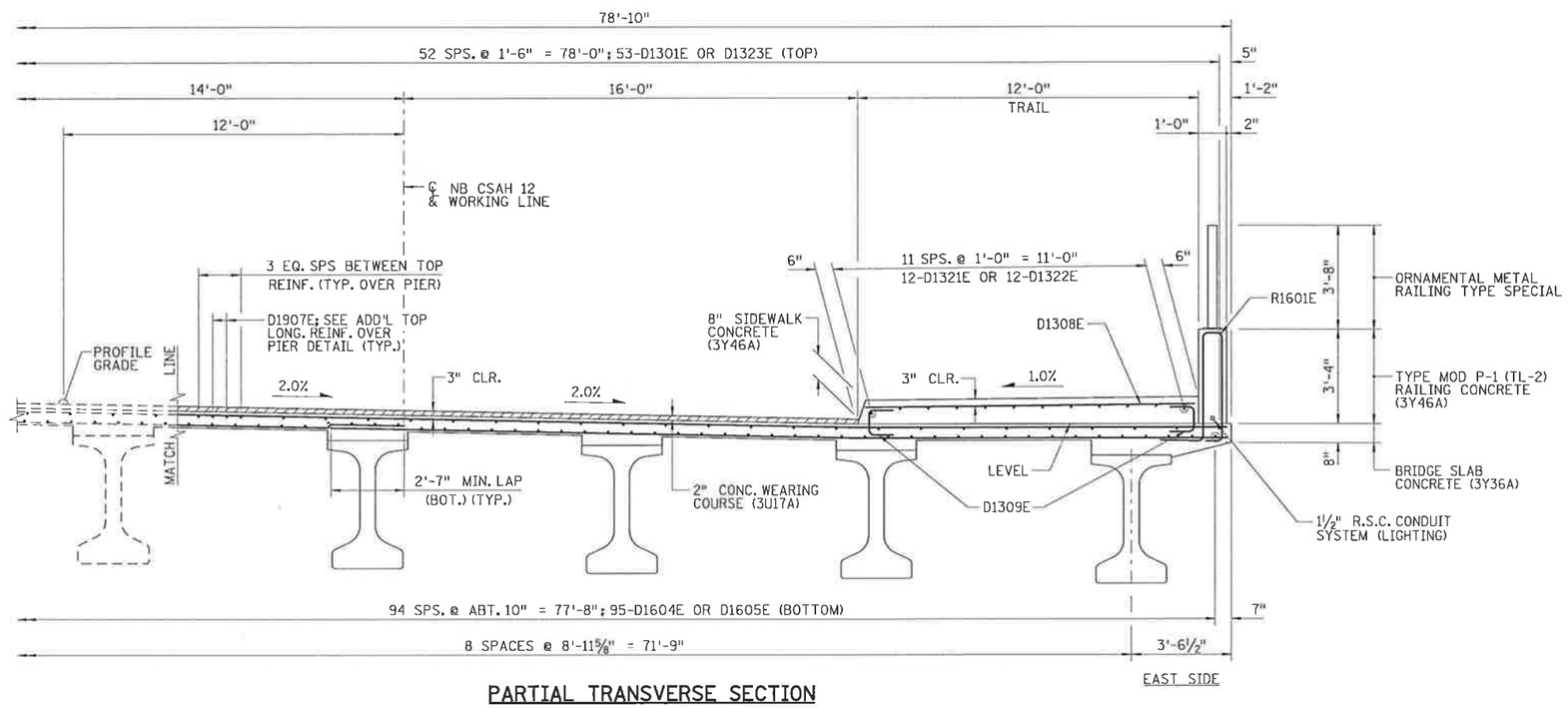

PARTIAL TRANSVERSE SECTION

NOTES:

1. SEE SHEET B43 FOR OVERHEAD SIGN DETAILS.

NO	DATE	BY	CKD	APPR	REVISION

...\br\final\plan\6962_sup03.dgn

I hereby certify that this plan, specification, or report was prepared by me or under my direct supervision and that I am a duly Licensed Professional Engineer under the laws of the State of Minnesota.

Print Name: JANET ELIZABETH GRONERT

Date 2/21/12 License # 44325

STATE PROJ. NO.	DRAWN BY
0702-116	B. SIMON
	DESIGNED BY J. GRONERT
BRIDGE NO. 07587	CHECKED BY L. ERICKSON
	COMM. NO. 6962

SRF CONSULTING GROUP, INC.

BLUE EARTH COUNTY

BRIDGE DECK DETAILS

CSAH 12 OVER TH 14

(SHEET 2 OF 5)

SHEET B20 OF B43

10:59:58 AM
2/9/2012
M:\projects\6962\br\final\plan\6962_sup03.dgn

SUMMARY OF QUANTITIES : CONDUIT SYSTEM (LIGHTING) (13)

ITEM	UNIT	QUANTITY
1 ½" DIA. R.S.C.	LIN. FT.	286
1 ½" DIA. END CAPS	EACH	2
P.V.C. HANDHOLE / PULLBOX (STD. PLATE 8114)	EACH	2

ALL MATERIAL LISTED ABOVE IS INCLUDED IN PRICE BID FOR "CONDUIT SYSTEM (LIGHTING)"

SUMMARY OF QUANTITIES : CONDUIT SYSTEM (FUTURE) (13)

ITEM	UNIT	QUANTITY
1 ½" DIA. R.S.C.	LIN. FT.	286
1 ½" DIA. END CAPS	EACH	2
P.V.C. HANDHOLE / PULLBOX (STD. PLATE 8114)	EACH	2

ALL MATERIAL LISTED ABOVE IS INCLUDED IN PRICE BID FOR "CONDUIT SYSTEM (FUTURE)"

SUMMARY OF QUANTITIES : SUPERSTRUCTURE

	ITEM	UNIT	QUANTITY
	BRIDGE APPROACH PANELS	SQ. YD.	351
(7)	BRIDGE SLAB CONCRETE (3Y36A)	SQ. FT.	18579
(5)(4)	TYPE MOD. P-1 (TL-2) RAILING CONC (3Y46A)	LIN. FT.	276
(5)(6)	TYPE F (TL-4) RAILING CONCRETE (3Y46A)	LIN. FT.	276
(5)(8)	RAISED MEDIAN CONCRETE (3Y46A)	SQ. FT.	1103
(5)(12)	SIDEWALK CONCRETE (3Y46A)	SQ. FT.	3308
(3)	REINFORCEMENT BARS (EPOXY COATED)	POUND	133100
(5)	ORNAMENTAL METAL RAILING TYPE SPECIAL	LIN. FT.	270
	BEARING ASSEMBLY	EACH	36
(11)	CONCRETE WEARING COURSE (3U17A)	SQ. FT.	16540
(9)	PRESTRESSED CONCRETE BEAMS MN54	LIN. FT.	2098
	DIAPHRAGMS FOR TYPE MN54 PREST BEAMS	LIN. FT.	449
	CONDUIT SYSTEM (FUTURE)	LUMP SUM	1
	CONDUIT SYSTEM (LIGHTING)	LUMP SUM	1
(1)(10)	FIXED CURVED PLATE BEARING ASSY., TYPE F-1	EACH	7
(1)(10)	EXP. CURVED PLATE BEARING ASSY., TYPE E-1	EACH	18
(1)(10)	EXP. CURVED PLATE BEARING ASSY., TYPE E-2	EACH	11
(2)	BRIDGE NAMEPLATE	EACH	1
(2)(1)	JOINT FILLER 1" x1'-3" x 1'-10" F RAIL DEFL. JT.	EACH	13
(2)(1)	JOINT FILLER 1" x1'-2" x 3'-4" P-1 RAIL DEFL. JT.	EACH	13

BILL OF REINFORCEMENT: SUPERSTRUCTURE

MARK	NO	LENGTH [FT - IN]	SHAPE	LOCATION
D1301E	212	50 - 6	STR	TOP LONGIT.
D1302E	566	35 - 10	STR	TOP TRANS
D1303E	566	44 - 10	STR	TOP TRANS
D1604E	380	53 - 8	STR	BOTTOM LONGIT
D1605E	499	31 - 5	STR	BOTTOM LONGIT & TRANS
D1606E	404	49 - 7	STR	BOTTOM TRANS
D1907E	104	15 - 0	STR	OVER PIER
D1308E	194	11 - 4	STR	SIDEWALK TRANS
D1309E	388	4 - 6	BENT	SIDEWALK VERT
D1910E	32	5 - 9	STR	DIAPHRAGM FF HORZ
D1911E	124	11 - 5	BENT	DIAPHRAGM STIRRUP
D1912E	196	10 - 0	BENT	DIAPHRAGM VERT
D1913E	124	5 - 8	BENT	DIAPHRAGM DIAG APPROACH
D1914E	124	6 - 7	BENT	DIAPHRAGM DIAG DECK
D1915E	54	6 - 0	STR	DIAPHRAGM THRU BEAMS
D1916E	196	9 - 9	BENT	SHEAR LUG STIRRUPS
D1917E	124	5 - 8	BENT	DIAPHRAGM TIE
D1918E	144	9 - 0	BENT	DIAPHRAGM STIRRUP AT BEAM
D1919E	48	8 - 0	STR	DIAPHRAGM FF HORIZ
D1920E	52	41 - 0	STR	DIAPHRAGM HORIZ
D1321E	24	17 - 6	STR	SIDEWALK LONGIT
D1322E	144	19 - 8	STR	SIDEWALK LONGIT
D1323E	53	40 - 2	STR	TOP LONGIT.
D1324E	4	38 - 0	STR	DIAPHRAGM FILLET HORIZ
		-		

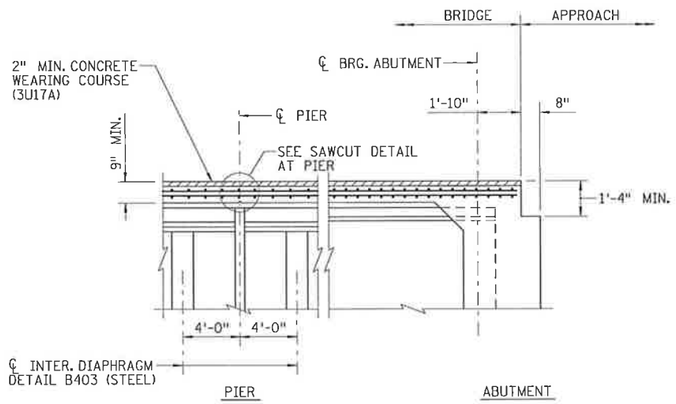

LONGITUDINAL SECTION
(DIMS. SHOWN ARE PERP. TO ℄ BRG.)

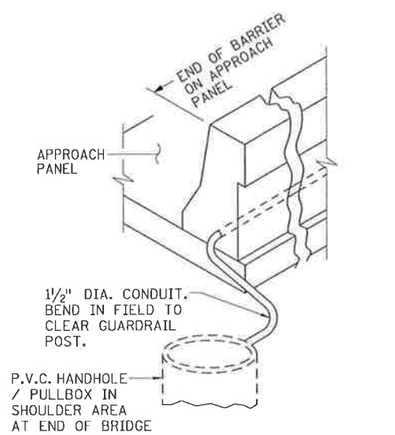

VIEW AT END OF APPROACH PANEL

SUMMARY OF QUANTITIES NOTES:

(1) QUANTITIES LISTED ARE FOR INFORMATIONAL PURPOSES, ANY ADDITIONAL MINOR ITEMS OR SLIGHT CHANGES IN QUANTITIES REQUIRED SHALL BE FURNISHED BY THE CONTRACTOR WITH NO ADDITIONAL COMPENSATION.

(2) TO BE INCLUDED IN PRICE BID FOR RAILING CONCRETE.

(3) INCLUDES DECK, CONCRETE RAILING, SIDEWALK, END DIAPHRAGM REINFORCEMENT, AND SIDEWALK ON APPROACH PANEL.

(4) TYPE MOD. P-1 (TL-2) RAILING CONCRETE (3Y46A) VOLUME IS APPROXIMATELY 36 CU. YDS.

(5) INCLUDES QUANTITY ON APPROACH PANEL.

(6) TYPE F (TL-4) RAILING CONCRETE (3Y46A) VOLUME IS APPROXIMATELY 34 CU. YDS.

(7) BRIDGE SLAB CONCRETE (3Y36A) VOLUME IS APPROXIMATELY 538 CU. YDS. USING AN AVERAGE STOOL HEIGHT OF 2½" INCHES AND INCLUDES CONCRETE END DIAPHRAGMS.

(8) RAISED MEDIAN CONCRETE (3Y46A) IS APPROXIMATELY 28 CU. YDS.

(9) PRESTRESSED CONCRETE BEAMS MN54 EQUALS 18 BEAMS.

(10) PAYMENT FOR BEARINGS INCLUDED IN ITEM "BEARING ASSEMBLY" PER EACH.

(11) CONCRETE WEARING COURSE TYPE (3U17A) VOLUME IS APPROXIMATELY 103 CU. YDS. WHICH INCLUDES 15 CU. YDS. FOR APPROACH PANELS.

(12) SIDEWALK CONCRETE (3Y46A) IS APPROXIMATELY 124 CU. YDS.

(13) QUANTITIES LISTED ARE FOR INFORMATIONAL PURPOSES, ANY ADDITIONAL MINOR ITEMS OR CHANGES IN QUANTITIES REQUIRED SHALL BE FURNISHED BY THE CONTRACTOR WITH NO ADDITIONAL COMPENSATION.

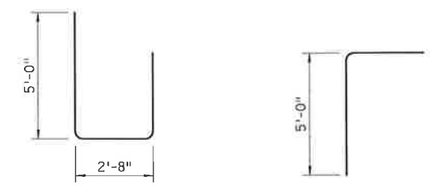

D1911E D1912E

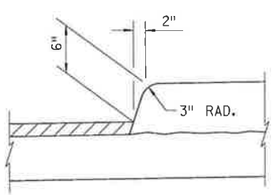

MEDIAN DETAIL

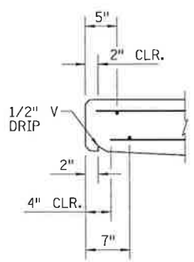

EDGE OF SLAB DETAIL

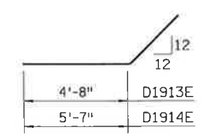

D1913E & D1914E

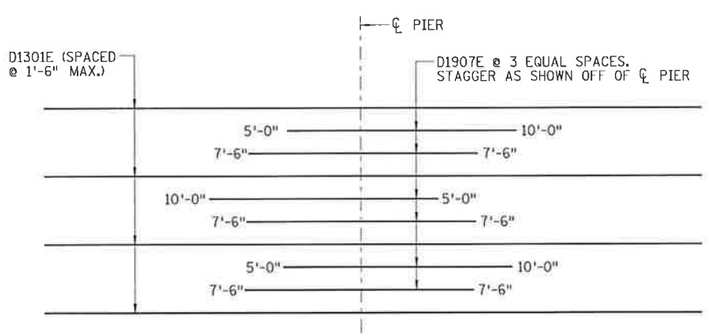

ADDITIONAL TOP LONGITUDINAL REINFORCEMENT OVER PIER

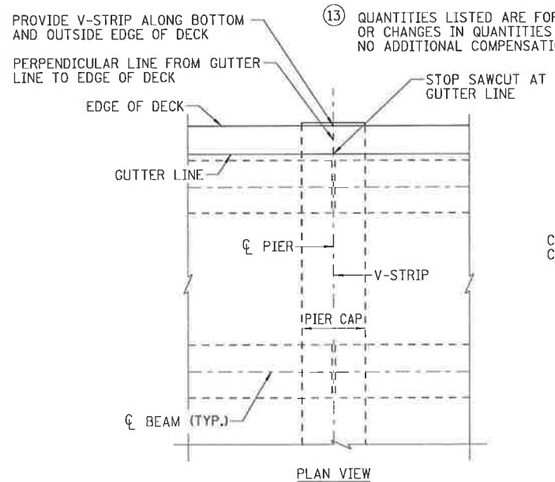

SAWCUT DETAIL AT PIER

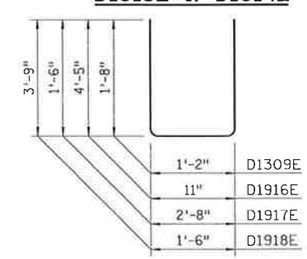

D1309E, D1916E, D1917E & D1918E

NO	DATE	BY	CKD	APPR	REVISION

...\br\final\plan\6962_sup04.dgn

I hereby certify that this plan, specification, or report was prepared by me or under my direct supervision and that I am a duly Licensed Professional Engineer under the laws of the State of Minnesota.
Print Name: JANET ELIZABETH GRONERT
Janet Elizabeth Gronert
Date 2/21/12 License # 44325

STATE PROJ. NO. 0702-116
BRIDGE NO. 07587

DRAWN BY B. SIMON
DESIGNED BY J. GRONERT
CHECKED BY L. ERICKSON
COMM. NO. 6962

SRF CONSULTING GROUP, INC.

BLUE EARTH COUNTY
BRIDGE DECK DETAILS
CSAH 12 OVER TH 14
(SHEET 3 OF 5)

SHEET B21 OF B43

10:59:59 AM
2/9/2012
h:\projects\6962\br\final\plan\6962_sup04.dgn

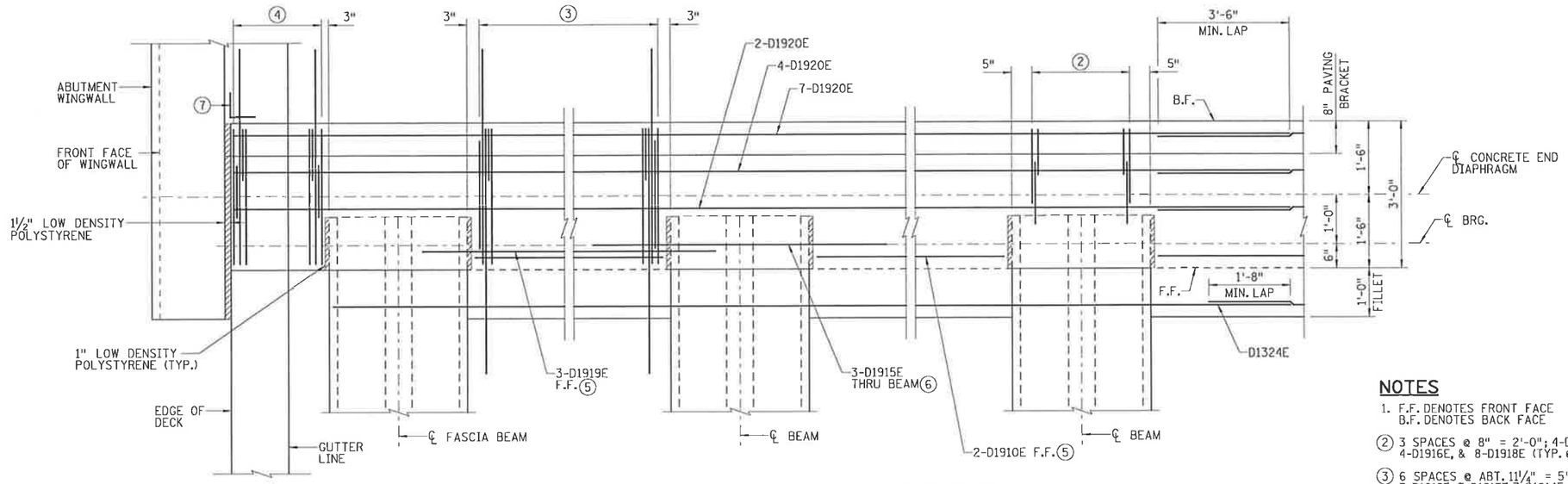

PARTIAL END DIAPHRAGM PLAN AT SOUTH ABUTMENT

(EAST END OF DIAPHRAGM SHOWN, WEST END SIMILAR) (END DIAPHRAGM AT NORTH ABUTMENT SIMILAR)

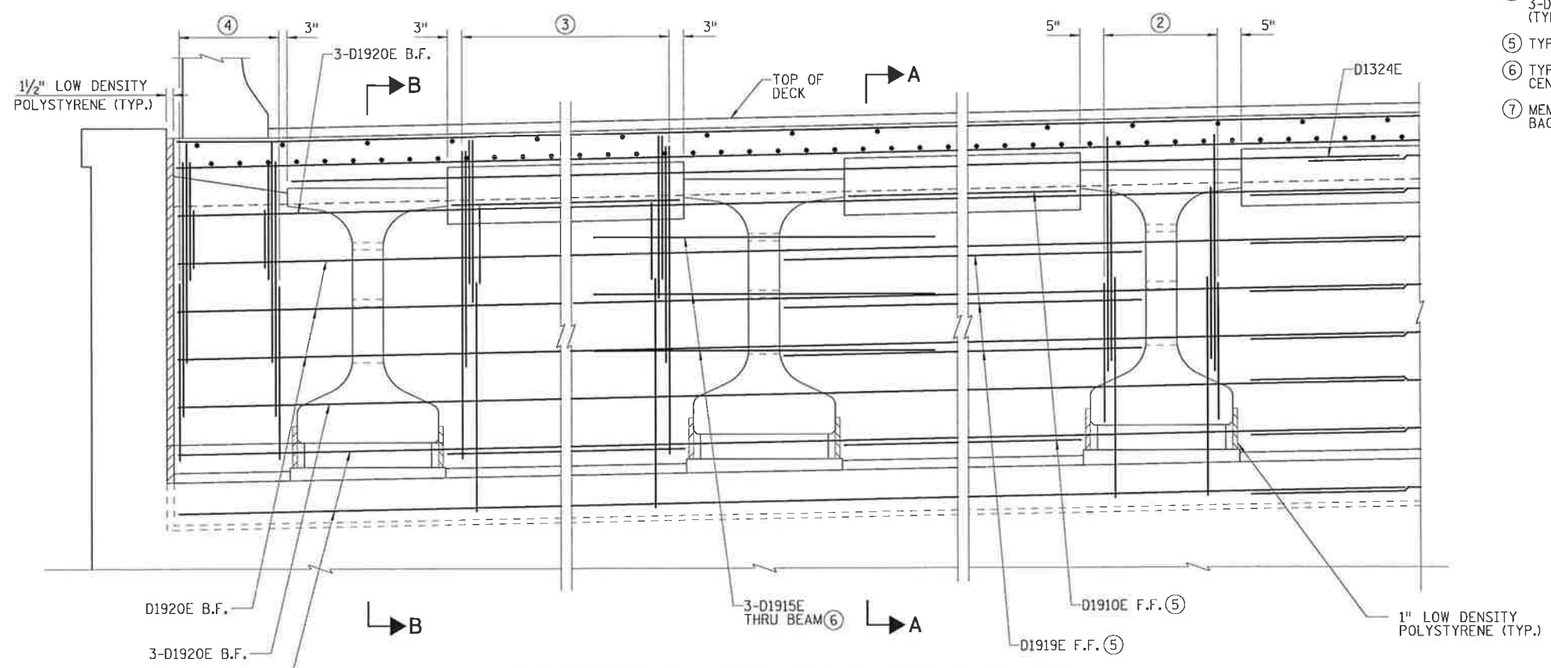

PARTIAL END DIAPHRAGM ELEVATION AT SOUTH ABUTMENT

(EAST END OF DIAPHRAGM SHOWN, WEST END SIMILAR) (END DIAPHRAGM AT NORTH ABUTMENT SIMILAR)

NOTES

1. F.F. DENOTES FRONT FACE
   B.F. DENOTES BACK FACE

② 3 SPACES @ 8" = 2'-0"; 4-D1912E, 4-D1916E, & 8-D1918E (TYP. @ EACH BEAM)

③ 6 SPACES @ ABT. 11¼" = 5'-7⅝"; 7-D1911E, 7-D1912E, 7-D1913E, 7-D1914E, 7-D1916E & 7-D1917E (TYP. BETWEEN EACH BEAM)

④ 2 SPACES @ 9" = 1'-6"; 3-D1911E, 3-D1912E, 3-D1913E, 3-D1916E & 3-D1917E (TYP. @ EACH FASCIA)

⑤ TYP. BETWEEN EACH BEAM

⑥ TYP. @ EACH BEAM. BAR SHALL BE CENTERED ON ℄ BEAM.

⑦ MEMBRANE WATERPROOFING SYSTEM WITH BACKER ROD.

NO	DATE	BY	CKD	APPR	REVISION

...\br\final\plan\6962_sup05.dgn

I hereby certify that this plan, specification, or report was prepared by me or under my direct supervision and that I am a duly Licensed Professional Engineer under the laws of the State of Minnesota.

Print Name: JANET ELIZABETH GRONERT

Janet Elizabeth Gronert

Date 2/21/12 License # 44325

STATE PROJ. NO. 0702-116

BRIDGE NO. 07587

DRAWN BY B. SIMON
DESIGNED BY J. GRONERT
CHECKED BY L. ERICKSON
COMM. NO. 6962

SRF CONSULTING GROUP, INC.

BLUE EARTH COUNTY

BRIDGE DECK DETAILS

CSAH 12 OVER TH 14

(SHEET 4 OF 5)

SHEET B22 OF B43

10:59:59 AM
2/9/2012
N:\projects\6962\br\final\plan\6962_sup05.dgn

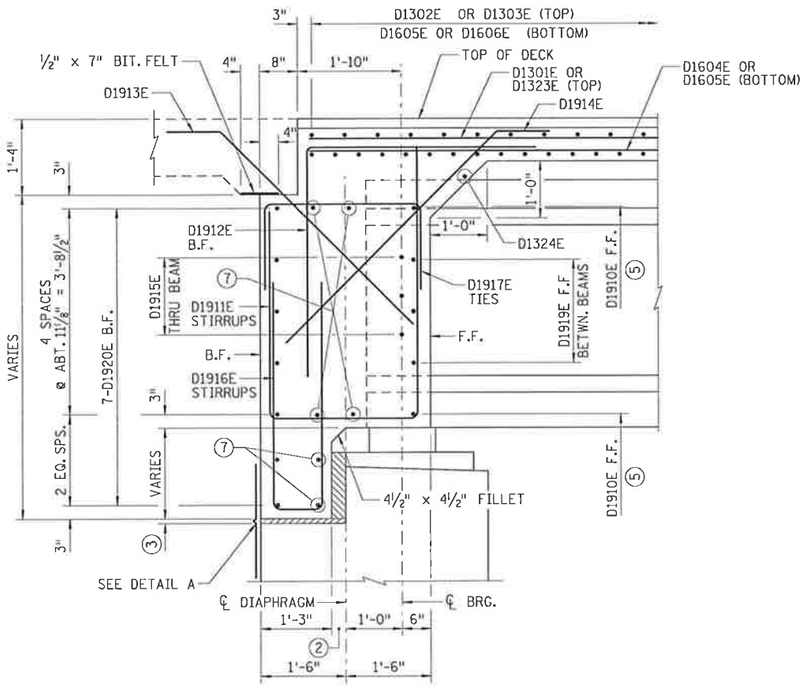

SECTION A-A
(BETWEEN BEAM)

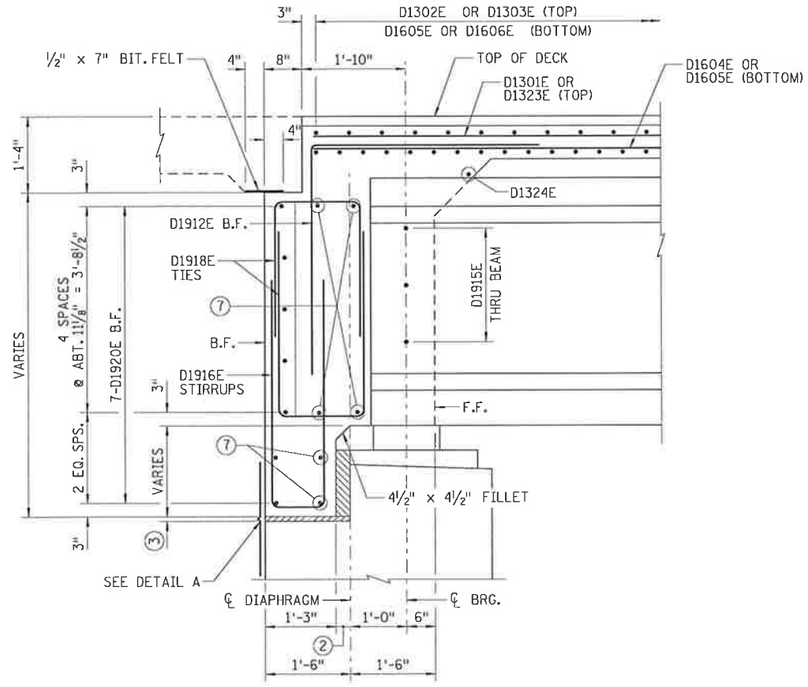

SECTION B-B
(AT BEAM)

NOTES:

1. F.F. DENOTES FRONT FACE.
   B.F. DENOTES BACK FACE.

(2) 3" LOW DENSITY POLYSTYRENE.

(3) 1" HIGH DENSITY POLYSTYRENE.

(4) WATERPROOF MEMBRANE PER MN/DOT 2481.3B EXCEPT THE STRIP SHALL BE 24" WIDE TO ALLOW MOVEMENT. THE MEMBRANE PLACEMENT SHALL BE SUCH THAT A 1" WRINKLE SHALL BE FORMED OVER THE JOINT OPENING. THE COST IS INCIDENTAL TO "STRUCTURAL CONCRETE (3Y43)".

(5) TYP. BETWEEN EACH BEAM.

6. CONCRETE END DIAPHRAGMS TO BE BRIDGE SLAB CONCRETE (3Y36A).

(7) D1920E.

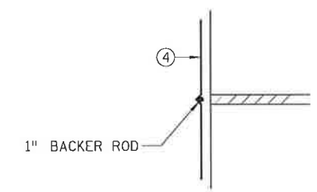

DETAIL A

NO	DATE	BY	CKD	APPR	REVISION

...\br\final\plan\6962_sup06.dgn

I hereby certify that this plan, specification, or report was prepared by me or under my direct supervision and that I am a duly Licensed Professional Engineer under the laws of the State of Minnesota.

Print Name: JANET ELIZABETH GRONERT

Janet Elizabeth Gronert

Date 2/21/12 License # 44325

STATE PROJ. NO. 0702-116

BRIDGE NO. 07587

DRAWN BY B. SIMON
DESIGNED BY J. GRONERT
CHECKED BY L. ERICKSON
COMM. NO. 6962

SRF CONSULTING GROUP, INC.

BLUE EARTH COUNTY

BRIDGE DECK DETAILS
CSAH 12 OVER TH 14
(SHEET 5 OF 5)

SHEET B23 OF B43

11:00:00 AM
2/9/2012
n:\projects\6962\br\final\plan\6962_sup06.dgn

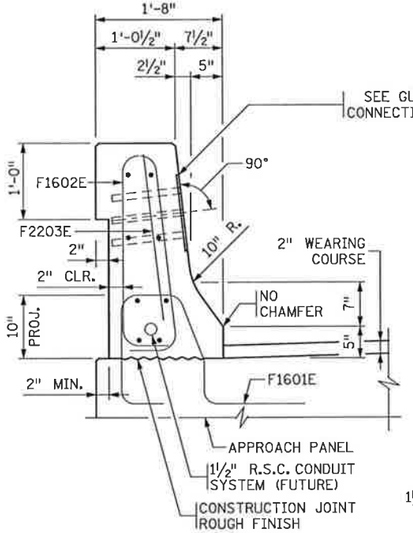

SECTION A-A

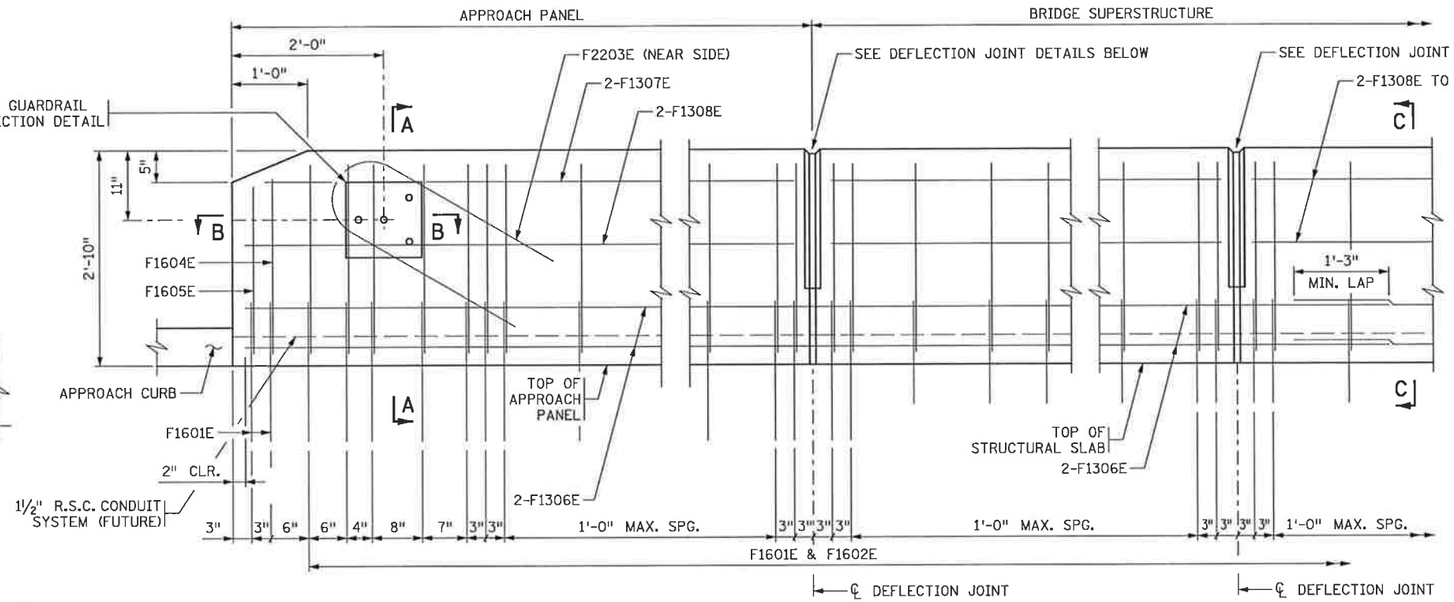

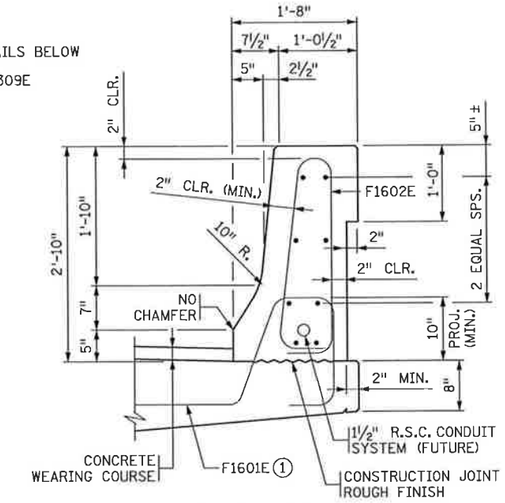

SECTION C-C

INSIDE ELEVATION OF TYPE F (TL-4) CONCRETE BARRIER

(CONCRETE WEARING COURSE NOT SHOWN)

BARRIER MEETS TEST LEVEL 4 REQUIREMENTS OF NCHRP REPORT 350

(TO BE USED ON WEST SIDE OF BRIDGE)

BILL OF REINFORCEMENT: TYPE MOD F (TL-4) CONC. BARRIER				
MARK	NO	LENGTH [FT - IN]	SHAPE	LOCATION
F1601E	312	5 - 5	BENT	BARRIER DOWEL
F1602E	308	6 - 7	BENT	BARRIER VERT.
F2203E	2	6 - 6	BENT	BARRIER VERT.
F1604E	2	6 - 1	BENT	BARRIER VERT.
F1605E	2	5 - 11	BENT	BARRIER VERT.
F1306E	32	35 - 7	STR	BARRIER HORZ
F1307E	4	19 - 3	STR	BARRIER HORZ.
F1308E	44	19 - 7	STR	BARRIER HORZ.
F1309E	8	17 - 5	STR	BARRIER HORZ.
		-		

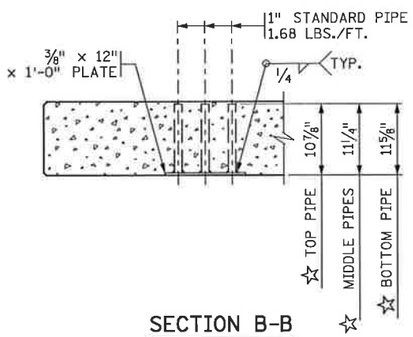

SECTION B-B

(REINFORCEMENT NOT SHOWN)
☆ DIMENSIONS INCLUDE ⅜" PLATE

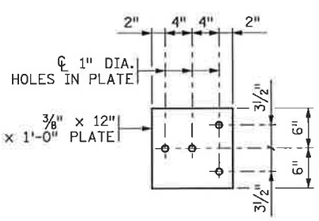

GUARDRAIL CONNECTION DETAIL

GALVANIZE AFTER FABRICATION PER Mn/DOT SPEC. 3394
ESTIMATED WEIGHT = 22 LBS

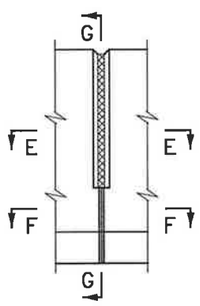

ELEVATION

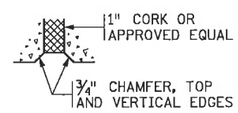

SECTION E-E

SECTION F-F

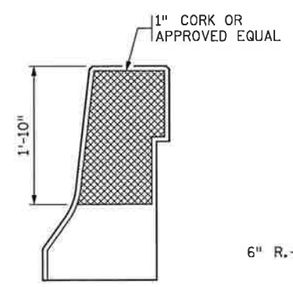

SECTION G-G

DEFLECTION JOINT DETAILS

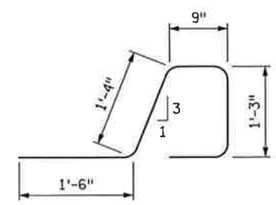

F1601E

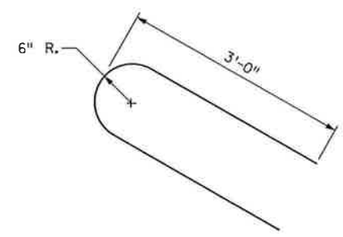

F2203E

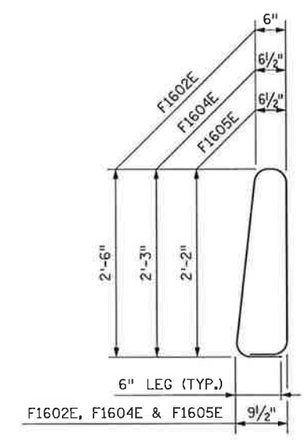

F1602E, F1604E & F1605E

GENERAL NOTES

LENGTH OF "TYPE F (TL-4) RAILING CONCRETE (3Y46A)" FOR PAYMENT SHALL BE MEASURED BETWEEN THE OUTSIDE FACES OF THE CONCRETE BARRIER.

CONCRETE BARRIER = 502 LBS./FT. (0.123 CU. YDS./FT.)

FINISH ALL EDGES OF BARRIER WITH ½" VEE, EXCEPT WHERE OTHERWISE NOTED.

MAXIMUM SPACING OF CONCRETE DEFLECTION JOINTS SHALL BE 20 FT.

SEE SUPERSTRUCTURE SHEET FOR JOINT SPACING.

GUARDRAIL CONNECTION TO BE STRUCTURAL STEEL, Mn/DOT SPEC. 3306.

GUARDRAIL CONNECTION & CORK TO BE CONSIDERED INCIDENTAL TO "TYPE F (TL-4) RAILING CONCRETE (3Y46A)".

BARRIER QUANTITIES ARE LISTED IN SUMMARY OF QUANTITIES FOR SUPERSTRUCTURE.

① PLACE BAR ON TOP OF BOTTOM REINFORCEMENT MAT.

REVISED: 05-26-2006

APPROVED: DECEMBER 18, 2003

STATE BRIDGE ENGINEER

MODIFIED

FIG. 5-397.117

NO	DATE	BY	CKD	APPR	REVISION

...\br\final\plan\6962_rail01.dgn

I hereby certify that this plan, specification, or report was prepared by me or under my direct supervision and that I am a duly Licensed Professional Engineer under the laws of the State of Minnesota.

Print Name: JANET ELIZABETH GRONERT

Date 2/21/12 License # 44325

STATE PROJ. NO. 0702-116

BRIDGE NO. 07587

DRAWN BY B. SIMON
DESIGNED BY J. GRONERT
CHECKED BY L. ERICKSON
COMM. NO. 6962

SRF CONSULTING GROUP, INC.

BLUE EARTH COUNTY

TYPE F (TL-4) CONCRETE BARRIER DETAILS

CSAH 12 OVER TH 14

SHEET B24 OF B43

11:00a01 AM
2/9/2012
N:\projects\6962\br\final\plan\6962_rail01.dgn

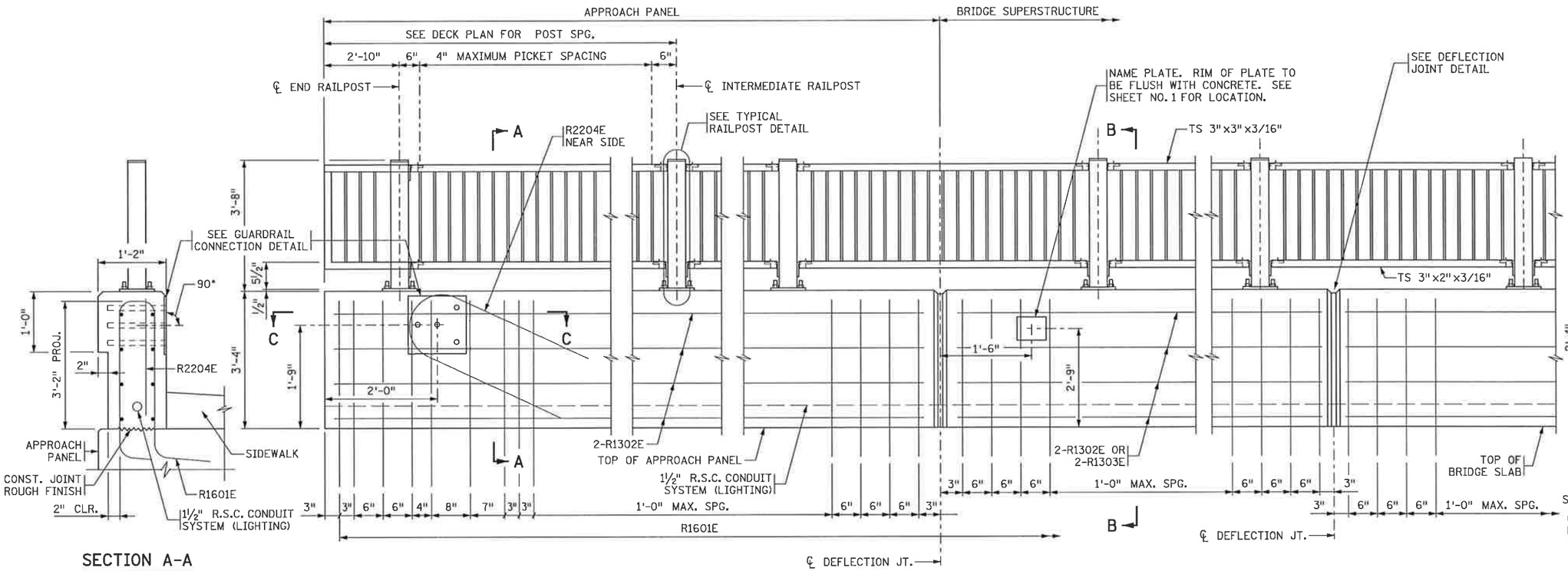

SECTION A-A

INSIDE ELEVATION OF RAILING

(SIDEWALK NOT SHOWN)

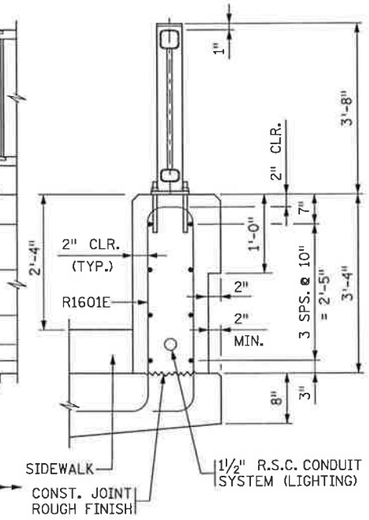

SECTION B-B

BILL OF REINFORCEMENT				
BAR	NO.	LENGTH	SHAPE	LOCATION
R1601E	368	9'-5"		RAIL BASE VERTICAL
R1302E	96	19'-6"		RAIL BASE LONGIT.
R1303E	16	17'-4"		RAIL BASE LONGIT.
R2204E	2	6'-6"		RAIL BASE VERTICAL

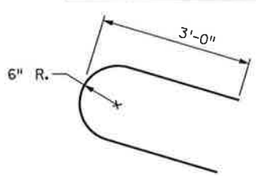

R2204E

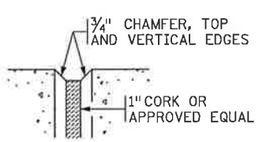

DEFLECTION JOINT DETAIL

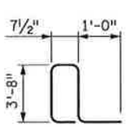

R1601E

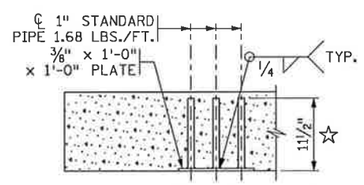

SECTION C-C

(REINFORCEMENT NOT SHOWN)
☆ DIMENSION INCLUDES ⅜" PLATE

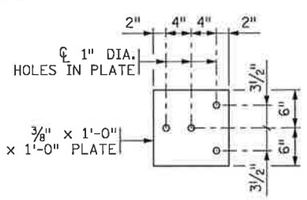

GUARDRAIL CONNECTION DETAIL

GALVANIZE AFTER FABRICATION PER Mn/DOT SPEC. 3394. ESTIMATED WEIGHT = 22 LBS.

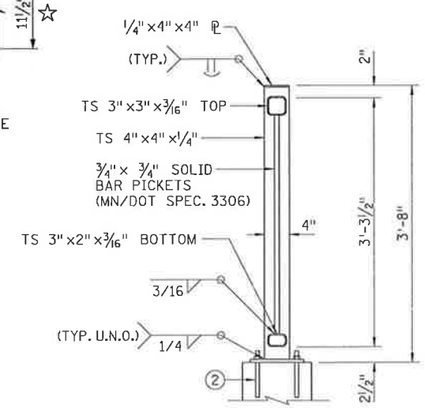

TYPICAL RAILPOST

GENERAL NOTES

LENGTH OF "TYPE MOD P-1 (TL-2) RAILING CONCRETE (3Y46A)" FOR PAYMENT SHALL BE MEASURED BETWEEN THE OUTSIDE FACES OF THE CONCRETE RAILING.

NAMEPLATE TO BE CONSIDERED INCIDENTAL TO "TYPE MOD P-1 (TL-2) RAILING CONCRETE (3Y46A)".

LENGTH OF "ORNAMENTAL METAL RAILING TYPE SPECIAL" FOR PAYMENT SHALL BE MEASURED BETWEEN THE ℄ OF THE ENDPOSTS.

CONCRETE PARAPET = 525 LBS./FT. (0.130 CU. YDS./FT.)

FINISH ALL EDGES OF CONCRETE PARAPET WITH ½" VEE, EXCEPT WHERE OTHERWISE NOTED.

MAX. SPACING OF CONCRETE DEFLECTION JOINTS SHALL BE 20 FT.

MAX. SPACING OF RAILING POSTS SHALL BE 10'-0".

SEE SUPERSTRUCTURE SHEET FOR JOINT SPACING & RAILPOST SPACING.

ANCHORAGES SHALL BE ACCURATELY PLACED TO PROVIDE CORRECT ALIGNMENT OF METAL RAILING.

DRILLED IN ANCHORAGES WILL BE PERMITTED IN LIEU OF ANCHORAGE SHOWN.

RAILPOSTS AND PICKETS SHALL BE VERTICAL.

ALL STRUCTURAL STEEL MATERIAL SHALL COMPLY WITH Mn/DOT SPEC. 3306.

GALVANIZE BOLTS, NUTS AND WASHERS PER Mn/DOT SPEC. 3392.

GALVANIZE ALL OTHER STRUCTURAL STEEL PER Mn/DOT SPEC. 3394 AFTER FABRICATION.

ALL RAILING MEMBERS SHALL BE FLAT AFTER FABRICATION AND GALVANIZING TO WITHIN ⅛" IN 10 FT. VERTICALLY AND HORIZONTALLY BY MECHANICAL MEANS WITHOUT DAMAGE TO THE ZINC COATING.

SEE SPECIAL PROVISIONS FOR PAINT TO BE APPLIED TO METAL RAILING.

GUARDRAIL CONNECTION TO BE INCLUDED IN PRICE BID FOR OTHER ITEMS.

PRICE BID FOR METAL RAILING INCLUDES ANCHORAGES AND ALL MATERIAL ABOVE TOP OF CONCRETE PARAPET.

RAIL QUANTITIES ARE INCLUDED IN SUMMARY OF QUANTITIES FOR SUPERSTRUCTURE.

ALL STRUCTURAL STEEL TUBING IN THE RAIL SHALL BE PER 3361 TYPE A.

THE RAILING, BASE PLATES AND PROTRUDING PORTIONS OF ANCHOR RODS, BOLTS, NUTS AND WASHERS SHALL BE PAINTED AFTER GALVANIZING IN ACCORDANCE WITH THE SPECIAL PROVISIONS.

RAILING SHALL BE GROUNDED WITH COPPER WIRE AT EACH APPROACH PANEL. ATTACH WIRE TO ABUTMENT PILE IN FOOTING OR ⅝" DIAMETER COPPER ROD PER SPEC. 2557.3.E.

THE CONNECTION AT ONE END OF EACH PANEL SHALL ALLOW FOR EXPANSION.

1. SPACE RAILPOST ANCHORAGE TO CLEAR REINFORCEMENT IN CONCRETE PARAPET.
2. ⅝" DIA. CHEMICAL ANCHOR RODS, Mn/DOT SPEC. 3385, TYPE A, WITH HEX NUTS AND WASHERS. MINIMUM ULTIMATE BOND STRENGTH SHALL BE 20,000 POUNDS, WITH A MINIMUM 5" EMBEDMENT LENGTH. SEE SPECIAL PROVISIONS.

MODIFIED

FIG. 5-397.154

REVISED:

APPROVED: DECEMBER 18, 2003

STATE BRIDGE ENGINEER

NO	DATE	BY	CKD	APPR	REVISION

...\br\final\plan\6962_ral102.dgn

I hereby certify that this plan, specification, or report was prepared by me or under my direct supervision and that I am a duly Licensed Professional Engineer under the laws of the State of Minnesota.

Print Name: JANET ELIZABETH GRONERT

Date 2/21/12 License # 44325

STATE PROJ. NO. 0702-116

BRIDGE NO. 07587

DRAWN BY B. SIMON

DESIGNED BY J. GRONERT

CHECKED BY L. ERICKSON

COMM. NO. 6962

SRF CONSULTING GROUP, INC.

BLUE EARTH COUNTY

ORNAMENTAL METAL RAILING TYPE SPECIAL AND TYPE MOD P-1 (TL-2) RAILING

CSAH 12 OVER TH 14

(SHEET 1 OF 2)

SHEET B25 OF B43

11:00:01 AM
2/9/2012
H:\projects\6962\br\final\plan\6962_ral102.dgn

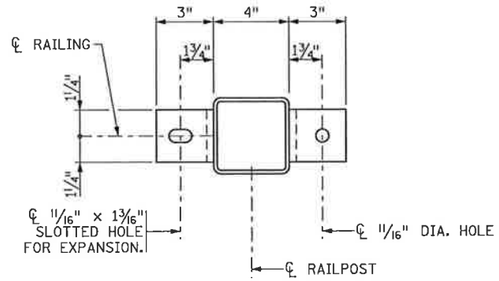

TOP VIEW
RAILING NOT SHOWN

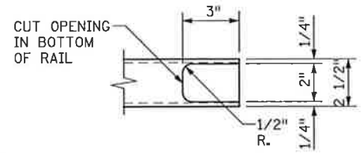

BOTTOM VIEW OF RAIL NOTCH

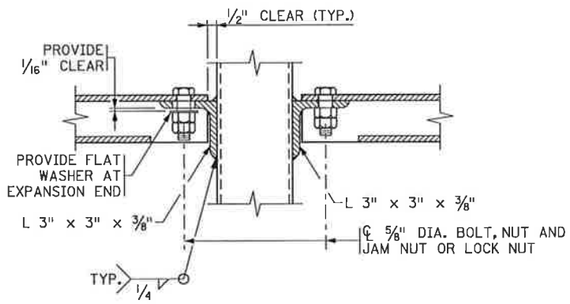

EXPANSION END FIXED END

TYPICAL INTERMEDIATE POST RAILING CONNECTION
PART ELEVATION, TOP AND BOTTOM RAIL CONNECTIONS ARE SIMILAR.

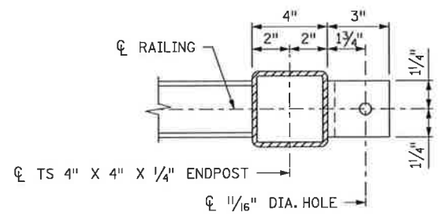

ENDPOST CONNECTION TOP VIEW
(RAILING NOT SHOWN)

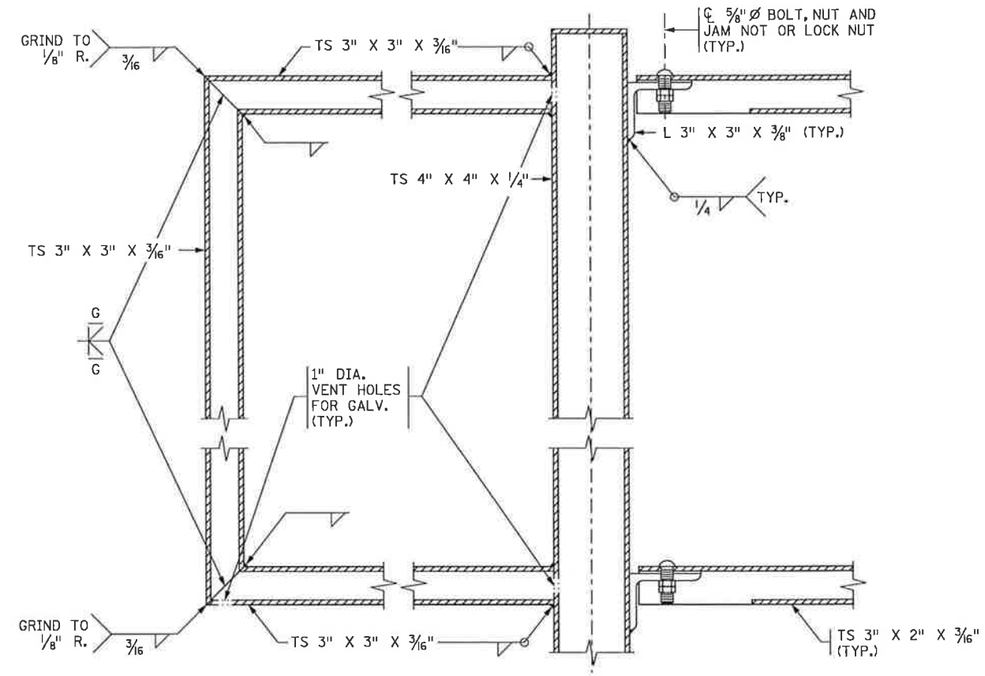

ENDPOST

TYPICAL ENDPOST RAILING CONNECTION
(PICKETS NOT SHOWN)

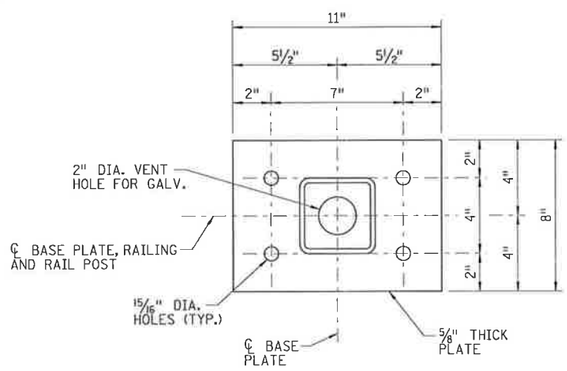

BASE PLATE

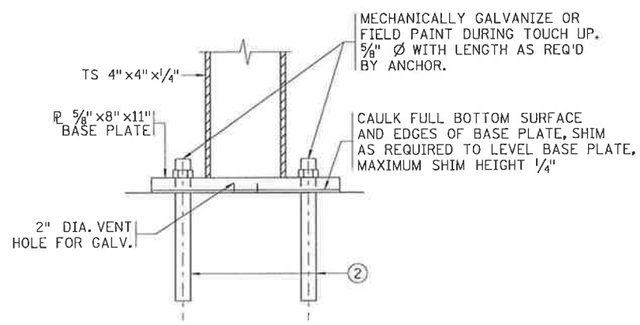

RAILPOST ANCHORAGE

GENERAL NOTES

1. 5/8" DIA. CHEMICAL ANCHOR RODS, Mn/DOT SPEC. 3385, TYPE A, WITH HEX NUTS AND WASHERS. MINIMUM ULTIMATE BOND STRENGTH SHALL BE 20,000 POUNDS, WITH A MINIMUM 5" EMBEDMENT LENGTH. SEE SPECIAL PROVISIONS.

NO	DATE	BY	CKD	APPR	REVISION

...\br\final\plan\6962_rail03.dgn

I hereby certify that this plan, specification, or report was prepared by me or under my direct supervision and that I am a duly Licensed Professional Engineer under the laws of the State of Minnesota.
Print Name: JANET ELIZABETH GRONERT
Janet Elizabeth Gronert
Date 2/21/12 License # 44325

STATE PROJ. NO. 0702-116
BRIDGE NO. 07587

DRAWN BY B. SIMON
DESIGNED BY J. GRONERT
CHECKED BY L. ERICKSON
COMM. NO. 6962

SRF CONSULTING GROUP, INC.

BLUE EARTH COUNTY
ORNAMENTAL METAL RAILING TYPE SPECIAL AND TYPE MOD P-1 (TL-2) RAILING
CSAH 12 OVER TH 14
(SHEET 2 OF 2)

SHEET B26 OF B43

11:00:02 AM
2/9/2012
h:\projects\6962\br\final\plan\6962_rail03.dgn

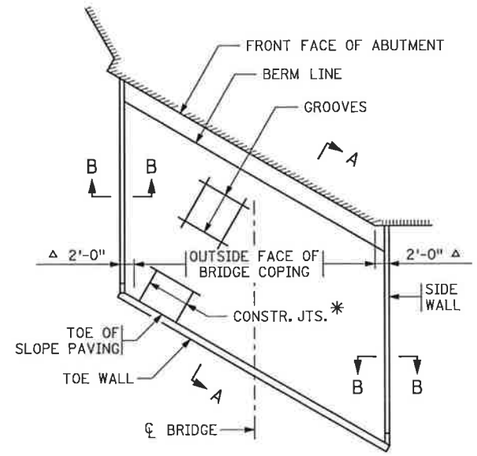

△ 2'-0" FOR TANGENT BRIDGE SUPERSTRUCTURES. VARIES 2'-0" MINIMUM FOR CURVED BRIDGE SUPERSTRUCTURE.

✳ VERTICAL CONSTRUCTION JOINTS MAY BE CONSTRUCTED PARALLEL TO ℄ OF BRIDGE FOR SKEWS TO 10° ONLY.

LAYOUT FOR SLOPES 1:2 OR FLATTER

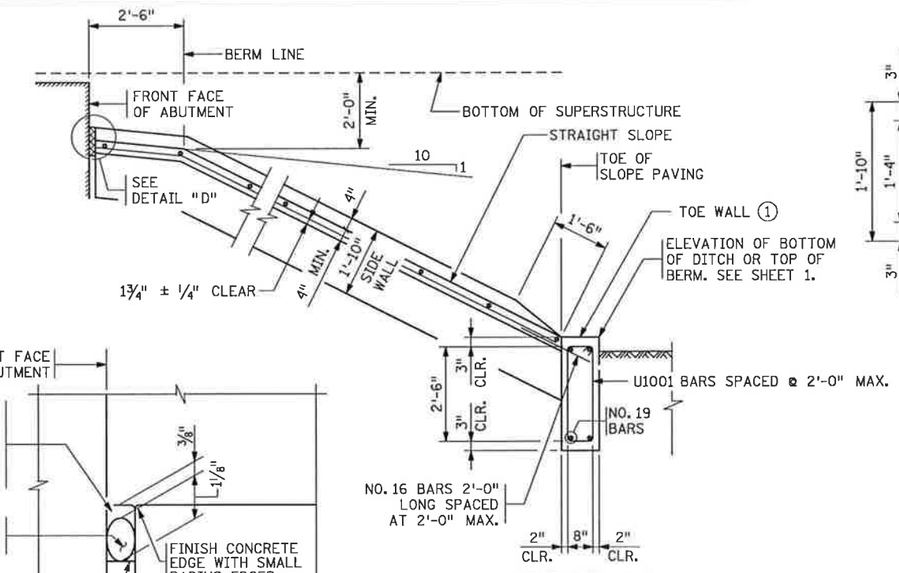

SECTION A-A

1:2 SLOPE SHOWN

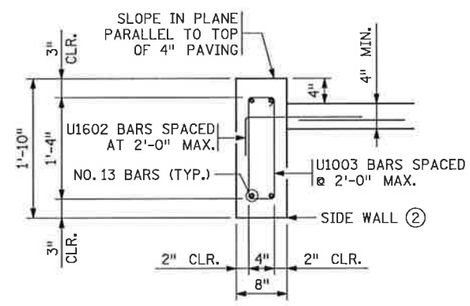

SECTION B-B

NORMAL TO SLOPE

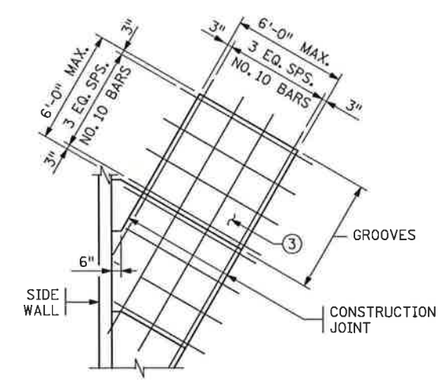

PAVING DETAIL

CONCRETE & REINFORCEMENT UNIT QUANTITIES

① 0.111 CU. YD. OF CONCRETE/LIN. FT.
8.37 LBS. OF REINFORCEMENT/LIN FT.

② 0.046 CU. YD. OF CONCRETE/LIN. FT.
4.46 LBS. OF REINFORCEMENT/LIN FT.

③ 0.111 CU. YD. OF CONCRETE/SQ. YD.
4.50 LBS. OF REINFORCEMENT/SQ. YD.

GENERAL NOTE

SLOPES ARE EXPRESSED AS A RATIO OF VERTICAL DISTANCE: HORIZONTAL DISTANCE.

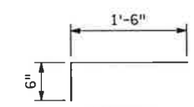

U1602

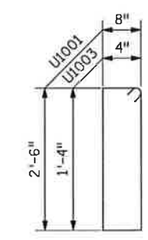

U1001 & U1003

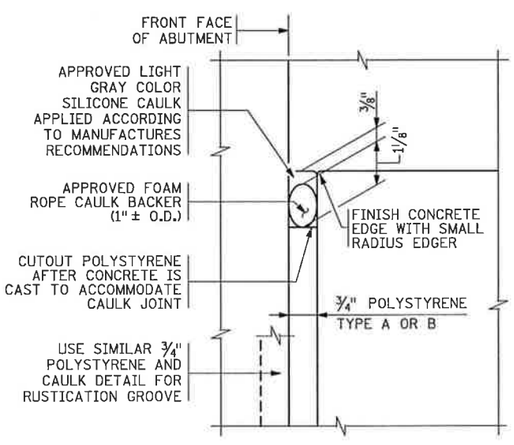

DETAIL D

REVISION:

APPROVED: SEPTEMBER 26, 2003

Daniel T. Hoogen
STATE BRIDGE ENGINEER

MODIFIED

FIG. 5-397.301

NO	DATE	BY	CKD	APPR	REVISION

...\br\final\plan\6962_det02.dgn

I hereby certify that this plan, specification, or report was prepared by me or under my direct supervision and that I am a duly Licensed Professional Engineer under the laws of the State of Minnesota.

Print Name: JANET ELIZABETH GRONERT

Janet Elizabeth Gronert

Date 2/21/12 License # 44325

STATE PROJ. NO. 0702-116

BRIDGE NO. 07587

DRAWN BY B. SIMON
DESIGNED BY J. GRONERT
CHECKED BY L. ERICKSON
COMM. NO. 6962

SRF CONSULTING GROUP, INC.

BLUE EARTH COUNTY

CONCRETE SLOPE PAVING UNDER BRIDGE
CSAH 12 OVER TH 14

SHEET B27 OF B43

11:00:02 AM
2/9/2012
H:\projects\6962\br\final\plan\6962_det02.dgn

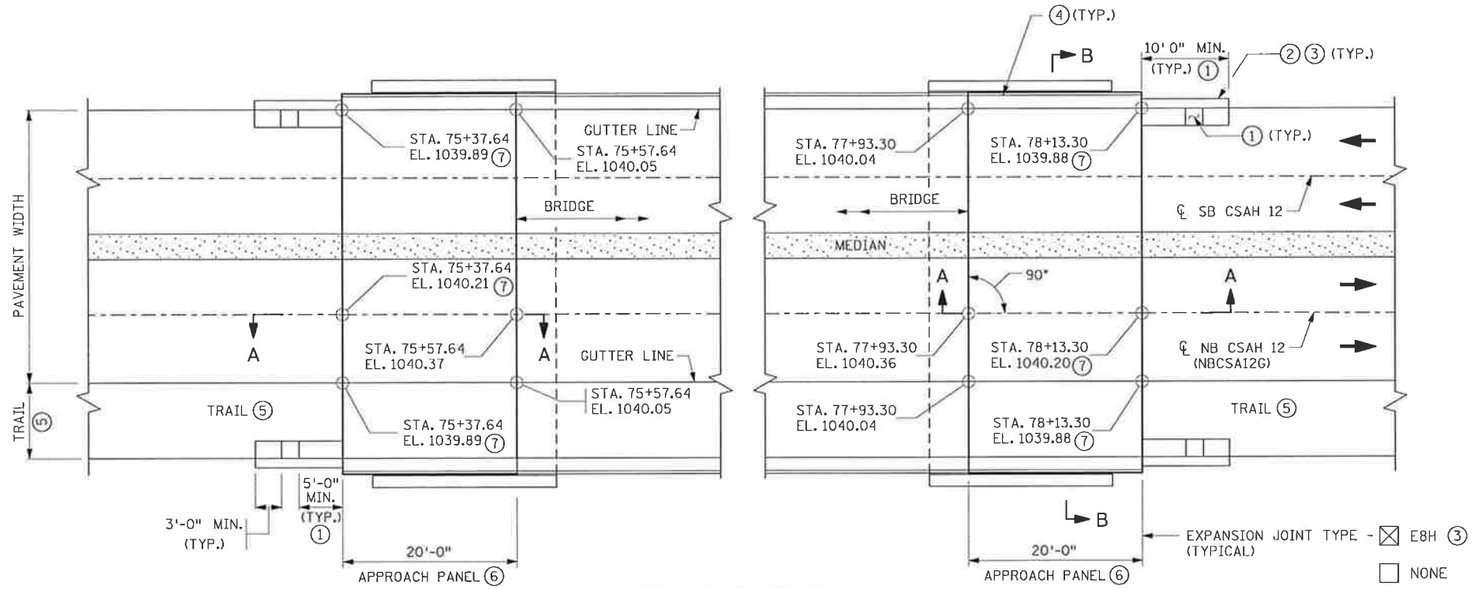

APPROACH PANEL PLAN

BARRIER ON APPROACH PANEL

NOTES:

1. SEE STANDARD PLAN 5-297.231 FOR DRAINAGE DETAILS AND ADDITIONAL REQUIREMENTS. PROVIDE BICYCLE SAFE CASTING FOR CATCH BASIN IN TRAIL.
2. B8 CURB DESIGN SHOWN. SEE STANDARD PLATES FOR CURB DETAILS.
3. E8H QUANTITY SHALL BE PAID FOR SEPARATELY, MEASURED FROM BACK OF CURB TO BACK OF CURB.
4. TO ACCOMMODATE GUARDRAIL CONNECTION AND CRASH TEST REQUIREMENTS THE CONCRETE BARRIER MUST EXTEND 5'-0" MINIMUM ONTO THE APPROACH PANEL. FOR PARALLEL WINGWALLS THE BARRIER MUST EXTEND 5'-0" MINIMUM ON TO THE APPROACH PANEL OR TO THE END OF THE WINGWALL, WHICH EVER IS LONGER. REFER TO BRIDGE PLAN FOR BARRIER REINFORCEMENT AND PAYMENT.
5. SEE GRADING PLANS FOR PAVEMENT AND SHOULDER WIDTHS AND CONFIGURATION.
6. PANEL SIZE AND REQUIREMENTS FOR TRANSVERSE AND LONGITUDINAL JOINTS ARE SHOWN ON STANDARD PLANS 5-297.228 AND 5-297.229.
7. FINAL ELEVATIONS ARE SHOWN. PLACEMENT OF APPROACH PANEL SHALL BE ¾" HIGHER THAN FINAL ELEVATION DUE TO ANTICIPATED SETTLEMENT OF APPROACH EMBANKMENT. SEE GRADING PLANS FOR EMBANKMENT DESIGN AND SETTLEMENT INFO.

GENERAL NOTES:

SECTION A-A IS SHOWN ON STANDARD PLAN 5-297.227.
SECTION B-B IS SHOWN ON STANDARD PLAN 5-297.225
AND SHOW THE STATION AND ELEVATION AT END LOCATIONS ON THE APPROACH PANEL.

A CONCRETE SILL IS REQUIRED BENEATH EXPANSION JOINT TYPE E8H. EXTEND THE EXPANSION JOINT AND THE SILL ALONG THE FULL WIDTH OF THE TRAFFIC LANES, SHOULDERS AND CURB. ENSURE THAT SILL DOES NOT INTERFERE WITH GUARDRAIL POST PLACEMENT. CONCRETE SILL AND CURBING, IF REQUIRED, ARE INCLUDED IN THE APPROACH PANEL PAY ITEM.

AT THE END OF THE CONCRETE BARRIER, TRANSITION FACE OF 4-INCH CURB INTO PROFILE OF CONCRETE BARRIER. SEE CURB TRANSITION DETAILS ON STANDARD PLAN 5-297.227 IF THERE IS NO ROADWAY CURB AT THE END OF THE APPROACH PANEL, APPROACH PANEL CURB HEIGHT FROM 4 INCH TO 0 INCH IN THE LAST 3'-4" SECTION (1:10 OR FLATTER SLOPE).

GENERAL DRAINAGE DETAILS ARE SHOWN ON BRIDGE APPROACH PANEL DRAINAGE DETAILS, STANDARD PLAN 5-297.231. ADDITIONAL CATCH BASIN DETAILS ARE SHOWN ON DRAINAGE PLAN SHEETS. SEE GRADING PLANS.

CONCRETE MIX SHALL BE 3A42 FOR APPROACH PANEL AND SILL.

REFER TO MNDOT SPEC. 2406 FOR ADDITIONAL INFORMATION.

MODIFIED

FIG. 5-297.224

NO	DATE	BY	CKD	APPR	REVISION

...\br\final\plan\6962_app01.dgn

I hereby certify that this plan, specification, or report was prepared by me or under my direct supervision and that I am a duly Licensed Professional Engineer under the laws of the State of Minnesota.

Print Name: JANET ELIZABETH GRONERT

Janet Elizabeth Gronert

Date 2/21/12 License # 44325

STATE PROJ. NO. 0702-116

BRIDGE NO. 07587

DRAWN BY J. HOFFMAN
DESIGNED BY J. GRONERT
CHECKED BY L. ERICKSON
COMM. NO. 6962

SRF CONSULTING GROUP, INC.

BLUE EARTH COUNTY

BRIDGE APPROACH PANEL (SHEET 1 OF 6)
CSAH 12 OVER TH 14
LAYOUT

SHEET B28 OF B43

11:00:03 AM
2/9/2012
M:\projects\6962\br\final\plan\6962_app01.dgn

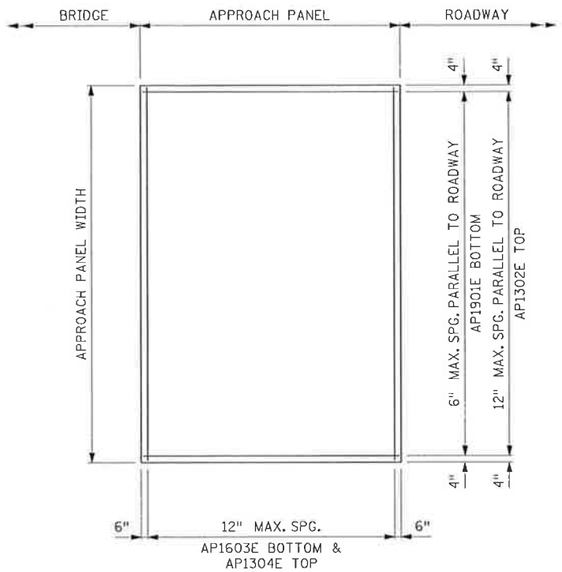

APPROACH PANEL REINFORCEMENT
SQUARE TO 10° SKEWS

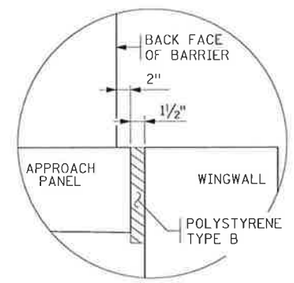

DETAIL "F"

ESTIMATED REINFORCEMENT QUANTITY FOR BRIDGE APPROACH PANELS

TYPE	LOCATION	ESTIMATIED WEIGHT
PANEL (SQ. TO 10°)	BRIDGE TO END OF APPROACH PANEL	48.5 LB./SQ. YD.
CURB	7.0 FT. CURB TRANSITION	19.0 LBS/EACH
SILL	SILL (IF REQUIRED)	14.0 LBS/LIN FT.

BILL OF REINFORCEMENT FOR BRIDGE APPROACH PANELS

CONTRACTOR IS REQUIRED TO COMPLETE THE BILL OF REINFORCEMENT TABLE AND PREPARE SHOP DRAWINGS AND SUBMIT THEM TO THE PROJECT ENGINEER AT LEAST 3 WEEKS BEFORE REBAR FABRICATION.

BAR	NO.	LENGTH	SHAPE	LOCATION
AP1901E		'-	———	BOTTOM LONGITUDINAL
AP1302E		'-	———	TOP LONGITUDINAL
AP1603E		'-	———	BOTTOM TRANSVERSE
AP1304E		'-	———	TOP TRANSVERSE
AP1605E	SER. OF	'- TO '-	———	BOTTOM TRANSVERSE
AP1306E	SER. OF	'- TO '-	———	TOP TRANSVERSE
AP1307E		'-	———	TOP & BOTTOM EDGE
AP1608E		8'-0	———	TOP CORNER - FAN
AP1609E		'-	———	BOTTOM TRANSVERSE
AP1310E		'-	———	TOP TRANSVERSE
AP1611E	SER. OF	'- TO '-	———	BOTTOM TRANSVERSE
AP1312E	SER. OF	'- TO '-	———	TOP TRANSVERSE
AP1913E	SER. OF	'- TO '-	———	BOTTOM LONGITUDINAL
AP1314E	SER. OF	'- TO '-	———	TOP LONGITUDINAL
AP1315E		'-	———	TOP & BOTTOM EDGE
AP1916E		5'-0	———	C2H-D JOINT

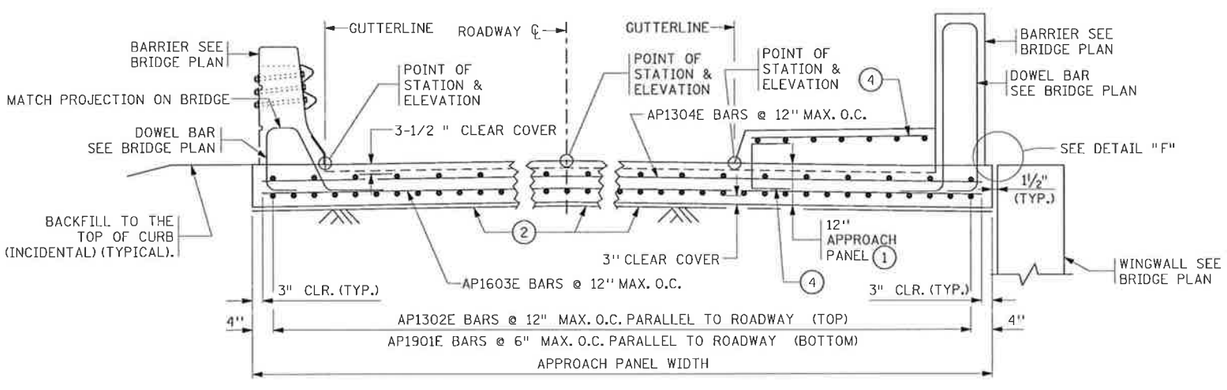

TRANSVERSE SECTION B-B
FROM STANDARD PLAN 5-297.224
CONCRETE BARRIERS ARE SHOWN, BUT MAY NOT BE PRESENT.
REFER TO BRIDGE PLANS FOR END OF BARRIER LOCATIONS.

GENERAL NOTES:

AS PER MNDOT SPEC. 3301, USE EPOXY COATED GRADE 60 REINFORCEMENT BARS IN APPROACH PANEL, CONCRETE SILL AND CURB TRANSITION.

THE FIRST TWO DIGITS OF EACH BAR MARK INDICATE THE BAR NUMBER, WHICH APPROXIMATES THE NOMINAL DIAMETER OF THE BAR IN MILLIMETERS (mm). BARS MARKED WITH THE SUFFIX "E" SHALL BE EPOXY COATED IN ACCORDANCE WITH Mn/DOT SPEC. 3301.

FOR VARIABLE ROADWAY WIDTHS, VARY THE LAP LENGTH OF THE REINFORCEMENT.

MINIMUM REINFORCEMENT LAP LENGTHS ARE AS FOLLOWS: NO. 13 BAR = 1'-8", NO. 16 BAR = 2'-1", NO. 19 BAR = 2'-6".

ALL LAP SPLICES SHALL BE STAGGERED SUCH THAT NO MORE THAN 50% OF REBAR IS SPLICED AT THE SAME LOCATION.

1. APPROACH SLAB THICKNESS SHOWN INCLUDES 2 INCH CONCRETE WEARING COURSE THAT MAY BE REQUIRED. CHECK BRIDGE PLANS FOR CONCRETE WEARING COURSE. CONCRETE WEARING COURSE IS INCLUDED IN SUPERSTRUCTURE QUANTITIES.
2. IF THE APPROACH PANEL IS TIED TO THE BRIDGE ABUTMENT WITH REINFORCEMENT BARS, PLACE 12 MIL POLYETHYLENE SHEETING (OR 2 LAYERS OF 6 MIL) UNDER THE LIMITS OF THE APPROACH PANEL TO ALLOW THE PANEL TO MOVE LONGITUDINALLY ON THE GRADE. SHEETING IS INCLUDED IN THE APPROACH PANEL PAY ITEM.
3. SEE STANDARD PLAN 5-297.224 FOR CURB TRANSITION LOCATION.
4. SEE BRIDGE DECK DETAILS FOR SIDEWALK REINFORCEMENT.

MODIFIED

FIG. 5-297.225

NO	DATE	BY	CKD	APPR	REVISION

...\br\final\plan\6962_app02.dgn

I hereby certify that this plan, specification, or report was prepared by me or under my direct supervision and that I am a duly Licensed Professional Engineer under the laws of the State of Minnesota.
Print Name: JANET ELIZABETH GRONERT
Janet Elizabeth Gronert
Date 2/21/12 License # 44325

STATE PROJ. NO. 0702-116
BRIDGE NO. 07587

DRAWN BY J. HOFFMAN
DESIGNED BY J. GRONERT
CHECKED BY L. ERICKSON
COMM. NO. 6962

SRF CONSULTING GROUP, INC.

BLUE EARTH COUNTY
BRIDGE APPROACH PANEL (SHEET 2 OF 6)
CSAH 12 OVER TH 14
REINFORCEMENT DETAILS

SHEET B29 OF B43

11:00:03 AM
2/9/2012
N:\projects\6962\br\final\plan\6962_app02.dgn

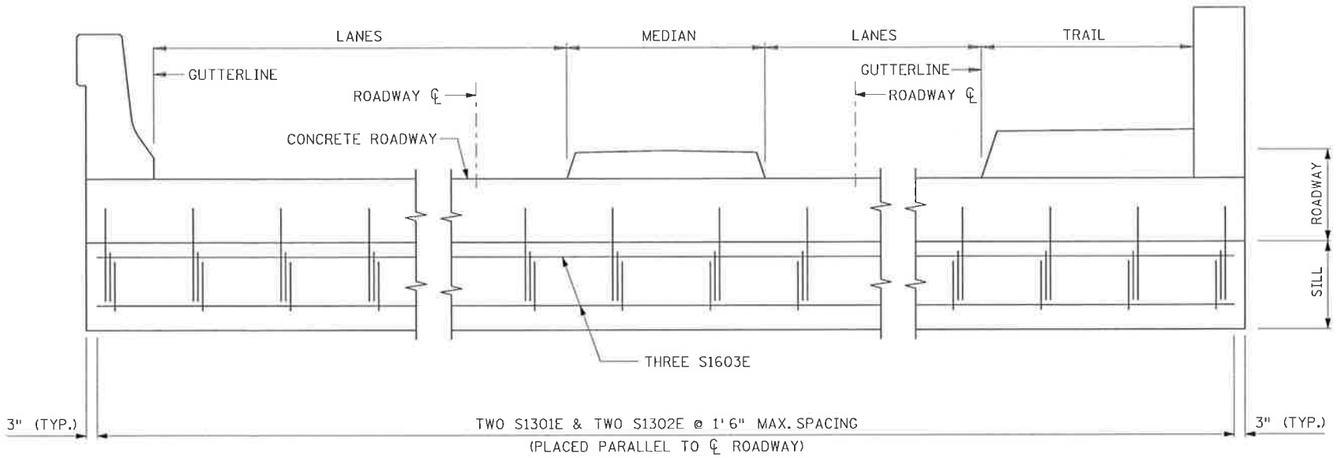

SILL ELEVATION

(REINFORCEMENT IN PAVEMENT NOT SHOWN)

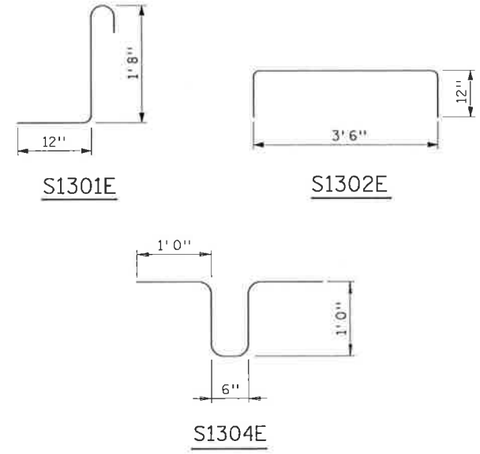

BILL OF REINFORCEMENT FOR CONCRETE SILL

CONTRACTOR IS REQUIRED TO COMPLETE THE BILL OF REINFORCEMENT TABLE AND PREPARE SHOP DRAWINGS AND SUBMIT THEM TO THE PROJECT ENGINEER AT LEAST 3 WEEKS BEFORE REBAR FABRICATION.

	BAR	NO.	LENGTH	SHAPE	LOCATION
	S1301E		3'2"		SILL VERTICAL
	S1302E		5'6"		SILL TIE
*	S1603E		'-		SILL HORIZONTAL
	S1304E		4'6"		KEY TIE
*	S1305E		' "		KEY HORIZONTAL

* PROVIDE 2'1" MINIMUM LAP IF TWO BARS REQUIRED

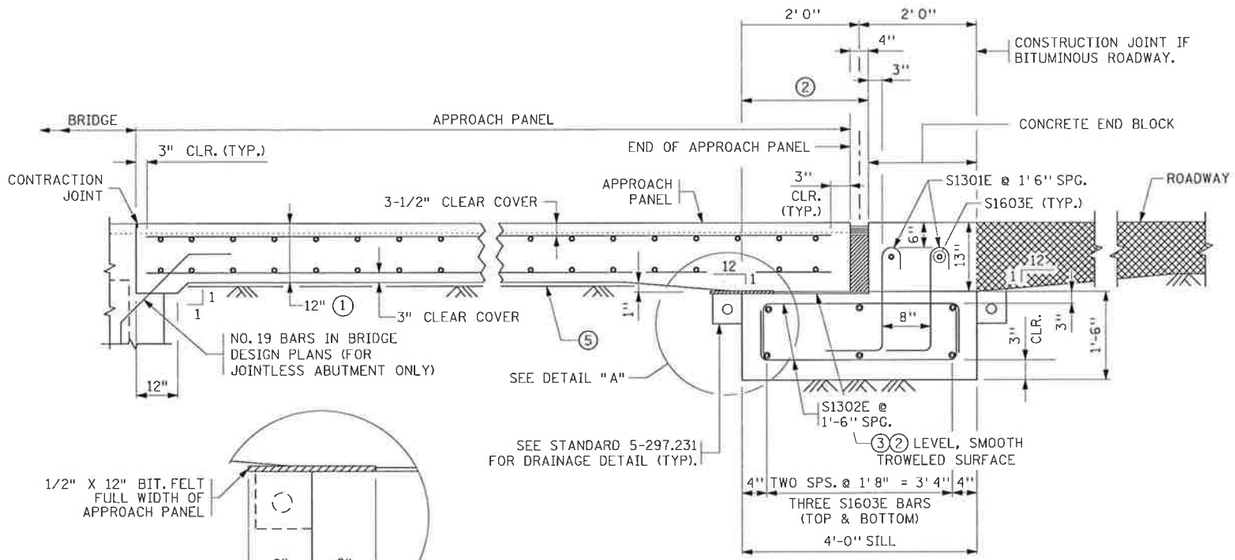

SILL DETAILS

(BITUMINOUS MAINLINE SIMILAR)

DETAIL "A"

LONGITUDINAL SECTION A-A

FROM SHEET 5-297.222 & SHEET 5-297.224

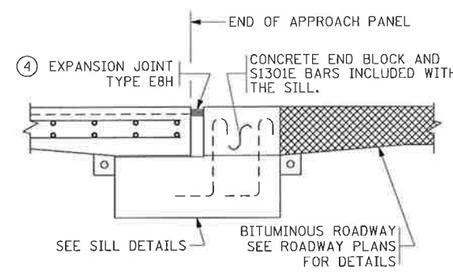

END OF APPROACH PANEL

NOTES:

AS PER MNDOT 3301, USE EPOXY COATED GRADE 60 REINFORCEMENT BARS.

ENSURE THAT SILL DOES NOT INTERFERE WITH GUARDRAIL POST PLACEMENT.

① APPROACH SLAB THICKNESS SHOWN INCLUDES 2-INCH CONCRETE WEARING COURSE THAT MAY BE REQUIRED. SEE SUPERSTRUCTURE PLANS FOR CONCRETE WEARING COURSE. CONCRETE WEARING COURSE IS INCLUDED IN SUPERSTRUCTURE QUANTITIES.

② PLACE PLASTIC SHEETING (MNDOT 3756) AS APPROVED BY THE ENGINEER TO BREAK BOND. COVER AREA SHOWN IN DETAIL. (SHEETING IS INCLUDED IN THE APPROACH PANEL PAY ITEM).

③ REQUIRED CONSTRUCTION JOINT.

④ SEE STANDARD PLANS 5-297.222 & 5-297.224 FOR TYPE OF EXPANSION JOINT. DETAILS OF EXPANSION JOINT TYPE E8H ARE SHOWN ON STANDARD PLAN 5-297.229.

⑤ IF THE APPROACH PANEL IS TIED TO THE BRIDGE ABUTMENT WITH REINFORCEMENT BARS, PLACE 12 MIL POLYETHYLENE SHEETING (OR 2 LAYERS OF 6 MIL) UNDER THE LIMITS OF THE APPROACH PANEL TO ALLOW THE PANEL TO MOVE LONGITUDINALLY ON THE GRADE. SHEETING IS INCLUDED IN THE APPROACH PANEL PAY ITEM.

MODIFIED

FIG. 5-297.227

NO	DATE	BY	CKD	APPR	REVISION

...\br\final\plan\6962_app03.dgn

I hereby certify that this plan, specification, or report was prepared by me or under my direct supervision and that I am a duly Licensed Professional Engineer under the laws of the State of Minnesota.

Print Name: JANET ELIZABETH GRONERT

Date 2/21/12 License # 44325

STATE PROJ. NO. 0702-116

BRIDGE NO. 07587

DRAWN BY J. HOFFMAN

DESIGNED BY J. GRONERT

CHECKED BY L. ERICKSON

COMM. NO. 6962

SRF CONSULTING GROUP, INC.

BLUE EARTH COUNTY

BRIDGE APPROACH PANEL (SHEET 3 OF 6)

CSAH 12 OVER TH 14

MISCELLANEOUS DETAILS

SHEET B30 OF B43

11:00:04 AM
R:\projects\6962\br\final\plan\6962_app03.dgn

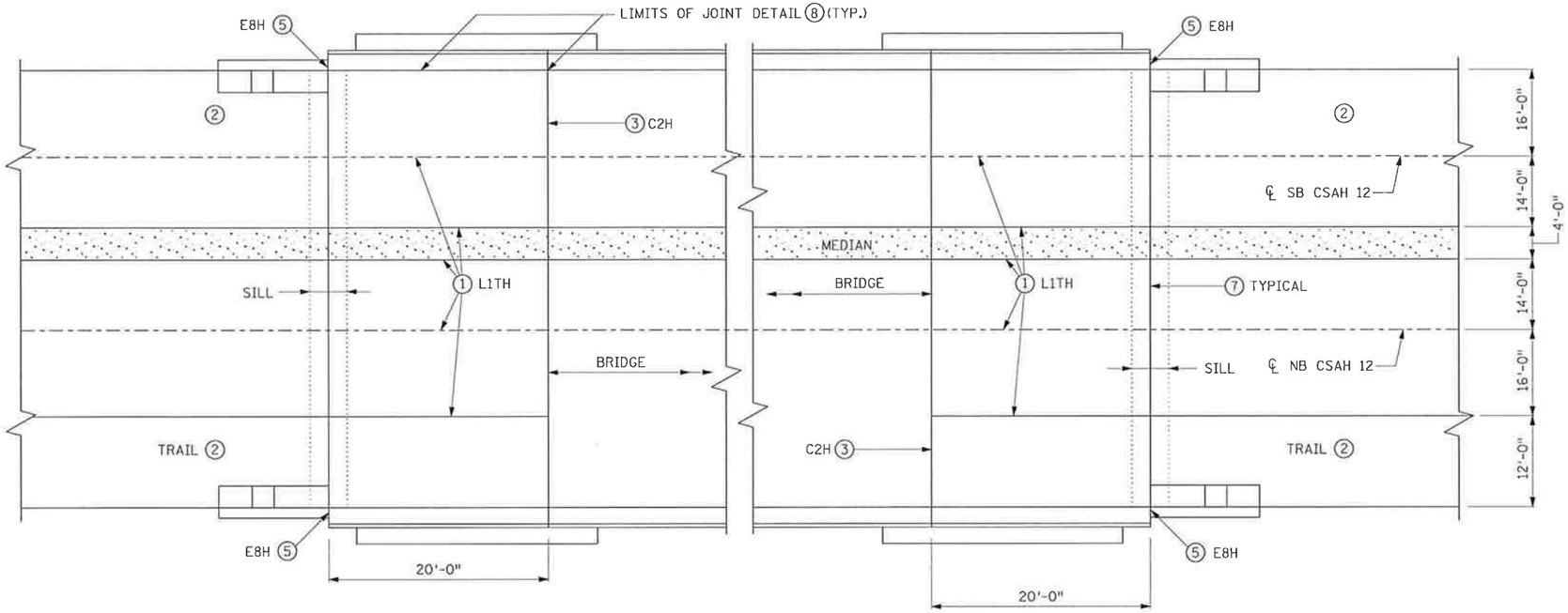

APPROACH PANELS - SQUARE TO 10° SKEWS ④

APPROACH PANEL JOINT LAYOUT NOTES:

1. L1TH LONGITUDINAL JOINT. SEE STANDARD PLAN 5-297.229 FOR REINFORCEMENT LAP LENGTH REQUIREMENTS FOR STAGED CONSTRUCTION.
2. SEE GRADING PLAN FOR PAVEMENT AND SHOULDER WIDTHS AND CONFIGURATION.
3. C2H CONTRACTION JOINT.
4. ALL JOINTS SHALL BE SAWCUT. SAWCUTS SHALL BE MADE WHILE THE CONCRETE IS STILL GREEN. WHEN A CONCRETE WEARING COURSE IS SPECIFIED, THE JOINTS SHALL BE SAWN THROUGH BOTH THE WEARING COURSE AND THE UNDERLYING APPROACH SLAB IN A SINGLE OPERATION.
5. E8H JOINT REQUIRED IN CURB ADJACENT TO E8H JOINT. E8H QUANTITY SHALL BE PAID FOR SEPARATELY, MEASURED FROM BACK OF CURB TO BACK OF CURB.
6. WHEN SKEW IS OVER 45°. THE JOINT SHALL BE PERPENDICULAR TO GUTTER FOR 1' (TYP).
7. SEE STANDARD PLAN 5-297.224 FOR TYPE OF EXPANSION JOINT.

MODIFIED

FIG. 5-297.228

NO	DATE	BY	CKD	APPR	REVISION

...\br\final\plan\6962_app04.dgn

I hereby certify that this plan, specification, or report was prepared by me or under my direct supervision and that I am a duly Licensed Professional Engineer under the laws of the State of Minnesota.

Print Name: JANET ELIZABETH GRONERT

Janet Elizabeth Gronert

Date 2/21/12 License # 44325

STATE PROJ. NO. 0702-116

BRIDGE NO. 07587

DRAWN BY J. HOFFMAN

DESIGNED BY J. GRONERT

CHECKED BY L. ERICKSON

COMM. NO. 6962

SRF CONSULTING GROUP, INC.

BLUE EARTH COUNTY

BRIDGE APPROACH PANEL (SHEET 4 OF 6)

CSAH 12 OVER TH 14

JOINT LAYOUT

SHEET B31 OF B43

11:00:04 AM
2/9/2012
n:\projects\6962\br\final\plan\6962_app04.dgn

EXPANSION JOINTS

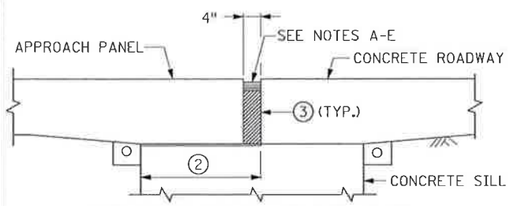

E8H JOINT DETAIL AT PAVEMENT

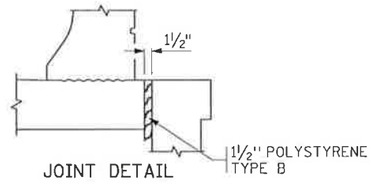

JOINT DETAIL
(CONCRETE BARRIER ON APPROACH PANEL)

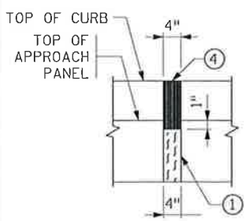

ELEVATION

SECTION THRU CURB

E8H JOINT AT CURB

EXPANSION JOINT NOTES:

① PREFORMED JOINT FILLER MATERIAL, SPEC. 3702.

② PLACE PLASTIC SHEETING SPEC. 3756 AS APPROVED BY THE ENGINEER TO BREAK BOND. COVER AREA SHOWN IN DETAIL. SEE SILL DETAILS ON STANDARD PLAN 5-297.227.

③ THE JOINT FACES SHALL BE CLEANED AND DRIED BY SANDBLASTING AND AIR BLASTING PRIOR TO SEALING THE JOINT.

④ HOT POUR JOINT SEALER SPEC. 3725. TOP OF SEALER FLUSH TO 1/8 INCH BELOW TOP OF PAVEMENT SURFACE. MAKE TOP OF SEALER FOR CURB SECTION E8H JOINTS FLUSH WITH SURFACE (+ 1/8 INCH OR - 1/8 INCH).

E8H PRESSURE RELIEF JOINT MATERIAL INSTALLATION INSTRUCTIONS:

SEE MNDOT APPROVED/QUALIFIED PRODUCTS LIST.

FURNISH AND INSTALL JOINT MATERIAL IN ACCORDANCE WITH THE MANUFACTURER'S RECOMMENDATIONS AND THE FOLLOWING:

(A) EXPANSION JOINT FILLER MATERIALS USED FOR A 4 INCH PRESSURE RELIEF JOINT CONSISTS OF A PREFORMED FOAM PRODUCT HAVING MINIMUM DIMENSIONS OF 4.5 INCHES IN WIDTH (MAY BE LAMINATED) AND 8 INCHES IN DEPTH, AND A MINIMUM LENGTH OF 10 FEET. WHEN THE CONCRETE DEPTH IS GREATER THAN THE DEPTH OF THE PRESSURE RELIEF MATERIAL, FILL THE VOID BELOW THE MATERIAL WITH POLYSTYRENE. FURNISH AND INSTALL THE JOINT MATERIAL UNDER COMPRESSION WITH A LUBRICANT ADHESIVE APPLIED TO THE CONCRETE CONTACT SURFACES.

(B) SAW OR FORM THE JOINTS 4 INCHES WIDE BY THE FULL-DEPTH OF THE PANEL. INSPECT TO ASSURE THAT THE INSIDE WALLS OF THE JOINT HAVE BEEN SANDBLASTED, ARE DRY, SMOOTH AND FREE OF DEBRIS AND LOOSE PARTICLES. APPLY TAPE TO THE TOP 1 INCH OF THE INSIDE WALLS TO PREVENT THE LUBRICANT ADHESIVE FROM CONTAMINATING THE CONCRETE BONDING SURFACES OF THE SUBSEQUENTLY PLACED HOT POUR JOINT SEALER.

(C) PAINT THE INSIDE WALLS OF THE JOINT WITH LUBRICANT ADHESIVE AT THE RATE OF 1 GALLON PER 50 LINEAL FEET OF JOINT.

(D) PINCH THE BOTTOM OF THE MATERIAL TOGETHER AND PUSH IT DOWN INTO THE JOINT. WALK THE MATERIAL DOWN INTO THE JOINT; USE A SLEDGEHAMMER AND A 2 X 4 IF NECESSARY. APPLY LUBRICANT ADHESIVE TO THE ENDS OF THE PREFORMED FOAM MATERIAL WHEN BUTTING TWO PIECES TOGETHER.

(E) FURNISH AND INSTALL THE FOAM RELIEF JOINT MATERIAL TO A DEPTH OF APPROXIMATELY 7/8 INCH BELOW THE FINISHED CONCRETE SURFACE. AFTER INSTALLATION, REMOVE THE TAPE AND FILL THE VOID ON TOP OF THE FOAM MATERIAL WITH APPROXIMATELY 1/2 INCH OF HOT POUR JOINT SEALER (MNDOT 3723 OR 3725) TO A LEVEL OF 3/8 INCH +/- 1/4 INCH BELOW THE FINISHED CONCRETE SURFACE. THE HOT POUR JOINT SEALER SHOULD ONLY SLIGHTLY MELT INTO THE FOAM JOINT MATERIAL (TO PREVENT EXCESSIVE MELTING OF THE JOINT MATERIAL, PLACE THE HOT POUR SEALER AT THE LOWER END OF THE TEMPERATURE SPECIFICATION). CHECK FOR CORRECT TEMPERATURE BY PLACING HOT POUR SEALER ON A SAMPLE OF WASTE FOAM MATERIAL.

SIDEWALK COVER PLATE

GENERAL NOTES:

GALVANIZE STRUCTURAL STEEL AFTER FABRICATION PER Mn/DOT SPEC. 3394
GALVANIZE FASTENERS PER Mn/DOT SPEC.3392.

STRUCTURAL STEEL SHALL COMPLY WITH Mn/DOT SPEC. 3306 OR Mn/DOT SPEC. 3309.

SHOP DRAWING SUBMITTALS REQUIRED PER Mn/DOT SPEC. 2471.

CAP SCREWS SHALL BE COUNTERSUNK 1/16" BELOW TOP OF PLATE.

FURNISHING AND INSTALLING SIDEWALK COVER PLATE IS INCIDENTAL.

① USE LARGEST SINGLE PIECE POSSIBLE. USE OF SMALL PIECES OR SCRAPS SECURED TOGETHER IS PROHIBITED.

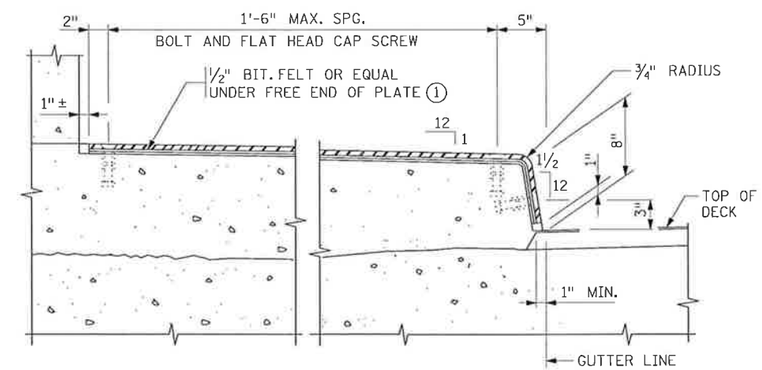

SECTION THROUGH SIDEWALK

JOINT DETAILS

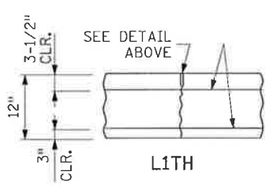

L1TH

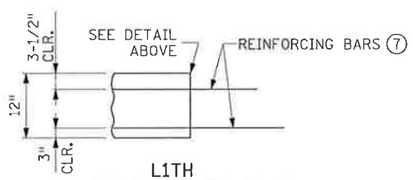

L1TH
(AT CONSTRUCTION JOINT)

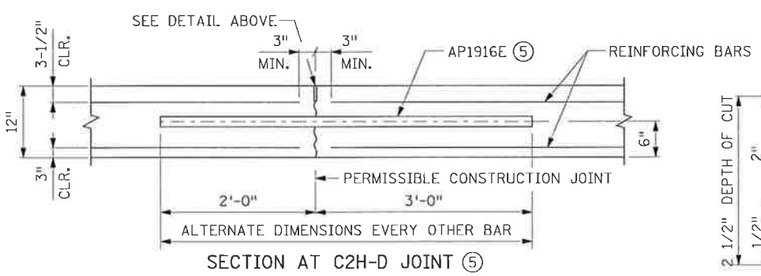

SECTION AT C2H-D JOINT ⑤

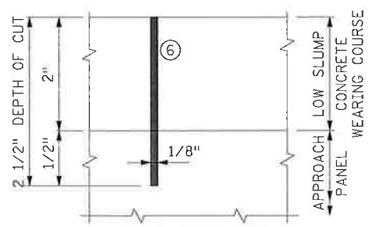

C2H & L1TH WITH
CONCRETE WEARING COURSE ⑥
(SAWED & SEALED PER SPEC. 3725)

JOINT NOTES:

⑤ PERMISSIBLE CONSTRUCTION JOINT. AP1916E BARS AT 12-INCH SPACING AT MID DEPTH OF SLAB, PARALLEL TO THE CENTERLINE OF THE ROADWAY. AP1916E BARS ARE 5'-0" LONG. PLACE THE BAR WITH 2'-0" ON ONE SIDE OF THE JOINT AND 3'-0" ON THE OPPOSITE SIDE OF THE JOINT. ALTERNATE THE 2'-0" AND 3'-0" DIMENSION AS SHOWN ON THE PLAN.

⑥ CLEAN AND DRY FULLY CURED JOINT FACES BY SANDBLASTING PRIOR TO SEALING THE JOINT.

⑦ WHEN CONSTRUCTING A L1TH JOINT UNDER STAGED CONSTRUCTION, EXTEND NO. 13 BARS 1'-8" AND NO. 16 BARS 2'-1" PAST THE EDGE OF THE FIRST CONCRETE POUR. CONSTRUCT L1TH JOINT ACCORDING TO DETAIL SHOWN AFTER ADJACENT POUR IS COMPLETE.

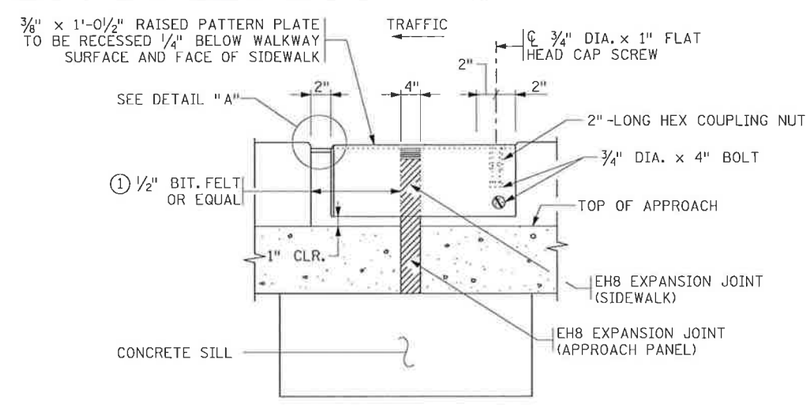

SIDEWALK ELEVATION

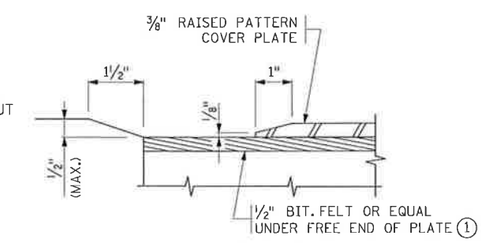

DETAIL "A"

MODIFIED

FIG. 5-297.229

NO	DATE	BY	CKD	APPR	REVISION

...\br\final\plan\6962_app05.dgn

I hereby certify that this plan, specification, or report was prepared by me or under my direct supervision and that I am a duly Licensed Professional Engineer under the laws of the State of Minnesota.

Print Name: JANET ELIZABETH GRONERT

Janet Elizabeth Gronert

Date 2/21/12 License # 44325

STATE PROJ. NO. 0702-116

BRIDGE NO. 07587

DRAWN BY J. HOFFMAN
DESIGNED BY J. GRONERT
CHECKED BY L. ERICKSON
COMM. NO. 6962

SRF CONSULTING GROUP, INC.

BLUE EARTH COUNTY
BRIDGE APPROACH PANEL (SHEET 5 OF 6)
CSAH 12 OVER TH 14
JOINT DETAILS

SHEET B32 OF B43

11:00:05 AM
2/9/2012
h:\projects\6962\br\final\plan\6962_app05.dgn

NOTES:

1. 4-INCH NOMINAL DIAMETER THERMOPLASTIC PIPE, AS PER ASTM D1785M, SCHEDULE 40. SLOPE PIPE TO DITCH. WRAP PERFORATED PIPE WITH GEOTEXTILE AS PER SPEC. 3733. 1/8 INCH PER 12 INCH MINIMUM SLOPE. FURNISHING AND INSTALLING THE DRAIN SYSTEM IS INCIDENTAL.
2. BACKFILL WITH FINE AGGREGATE (MNDOT 3149) MODIFIED TO 0-3% PASSING A NO. 200 SIEVE (INCIDENTAL).
3. SEE ROADWAY PLAN FOR ADDITIONAL CATCH BASIN DETAILS.
4. LOCATE BETWEEN GUARDRAIL POST OR AS DETERMINED BY THE DESIGNER.
5. REFER TO THE DRAINAGE PLAN TO DETERMINE WHETHER A FLUME OR A CATCH BASIN REQUIRED.
6. SEE GRADING PLANS FOR PAVEMENT AND SHOULDER WIDTHS AND CONFIGURATION.

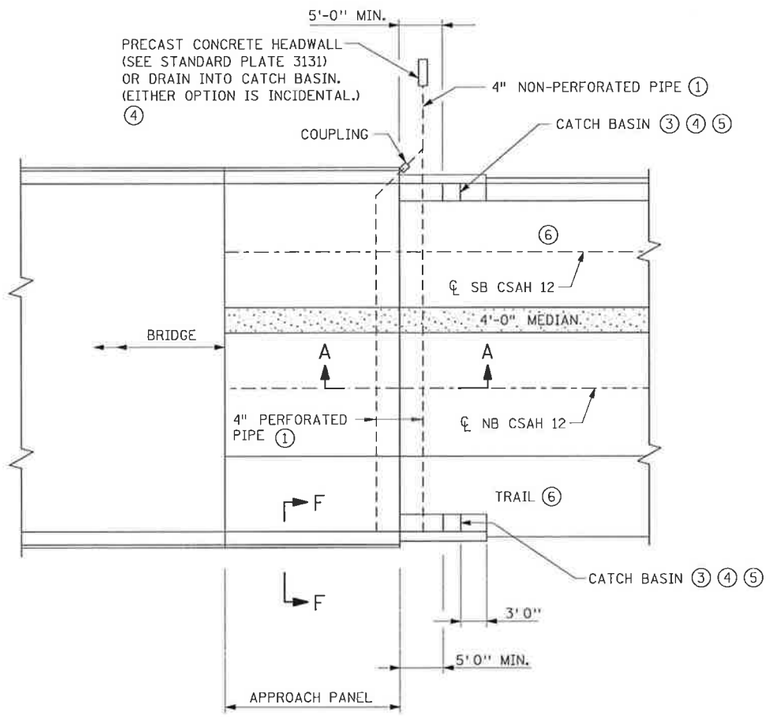

DIVIDED-URBAN ROADWAY PLAN
SQUARE TO 10° SKEWS

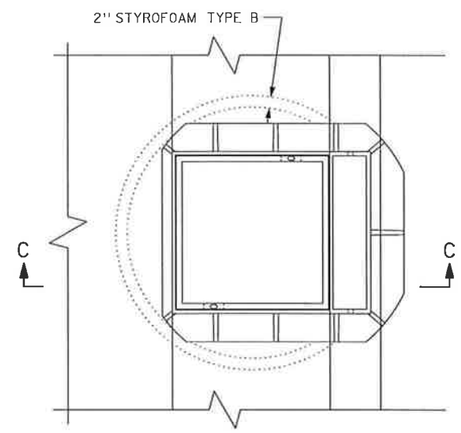

PLAN VIEW OF C.B. CASTING 3
(GRATE NOT SHOWN)

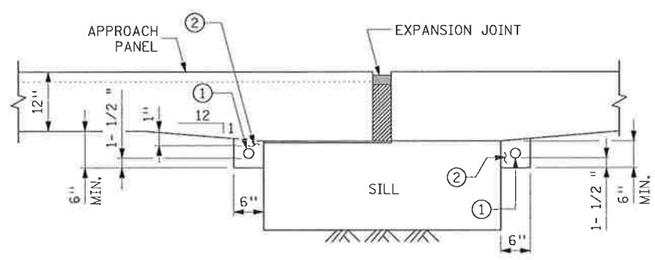

SECTION A-A
DRAINAGE AT EXPANSION JOINT DETAIL

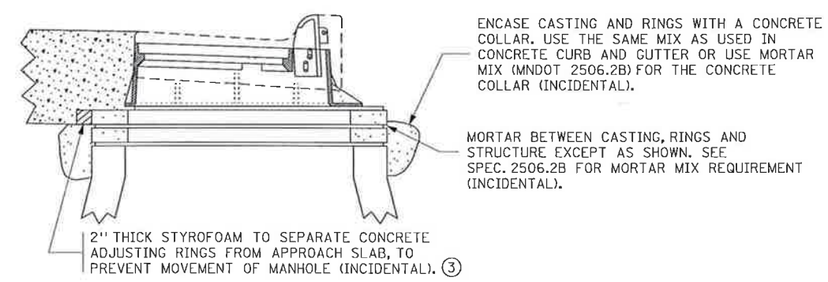

SECTION C-C

MODIFIED

FIG. 5-297.231

NO	DATE	BY	CKD	APPR	REVISION

...\br\final\plan\6962_app06.dgn

I hereby certify that this plan, specification, or report was prepared by me or under my direct supervision and that I am a duly Licensed Professional Engineer under the laws of the State of Minnesota.

Print Name: JANET ELIZABETH GRONERT

Date 2/21/12 License # 44325

STATE PROJ. NO. 0702-116

BRIDGE NO. 07587

DRAWN BY J. HOFFMAN
DESIGNED BY J. GRONERT
CHECKED BY L. ERICKSON
COMM. NO. 6962

SRF CONSULTING GROUP, INC.

BLUE EARTH COUNTY
BRIDGE APPROACH PANEL (SHEET 6 OF 6)
CSAH 12 OVER TH 14
DRAINAGE DETAILS

SHEET B33 OF B43

11:00:06 AM
2/24/2012
N:\projects\6962\br\final\plan\6962_app06.dgn

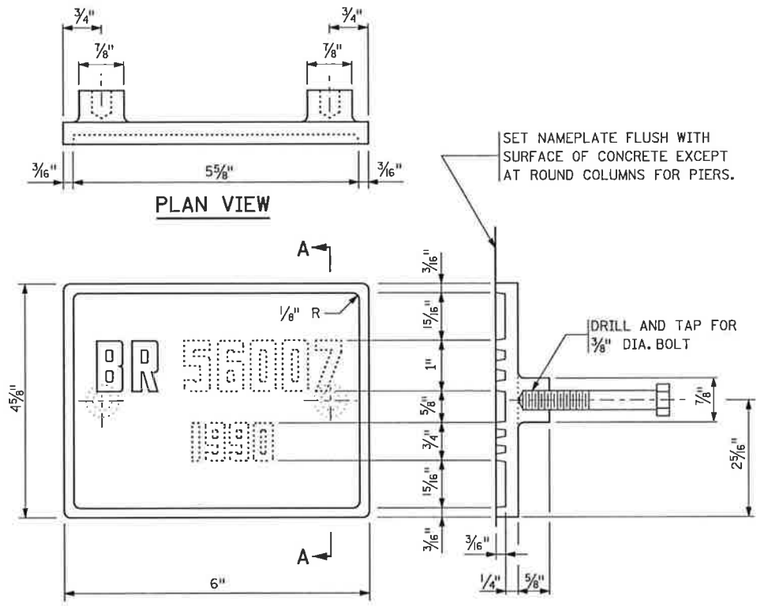

PLAN VIEW

ELEVATION

SECTION A-A

THE DASHED NUMBERS SHOWN ABOVE ARE FOR ILLUSTRATION.
DATA TO BE SHOWN ON NAMEPLATE IS AS FOLLOWS:

BRIDGE 07587

YEAR 2012

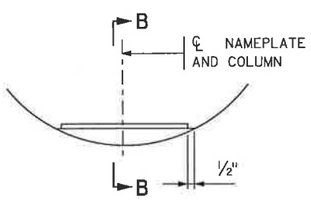

NAMEPLATE PLACEMENT

(ROUND CONCRETE PIER COLUMNS)

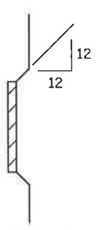

SECTION B-B

NUMBERS FOR NAMEPLATE

NOTES:

NO SHOP DRAWING REQUIRED.

MATERIAL SHALL COMPLY WITH Mn/DOT SPEC. 3327.

LETTERS AND NUMBERS SHALL CONFORM TO THOSE SHOWN.

DRAFT ON LETTERS AND NUMBERS SHALL NOT BE MORE THAN 3" IN 12".

HORIZONTAL SPACING OF LETTERS AND NUMBERS SHALL PRODUCE A BALANCED LAYOUT IN PROPORTION TO SPACING SHOWN.

TOP SURFACE OF LETTERS, NUMBERS AND FRAMES SHALL BE BURNISHED.

FURNISH 2 STEEL BOLTS 3/8" DIA. x 3" LONG WITH EACH PLATE.

ALL DIMENSIONS FOR 3/4" HIGH LETTERS AND NUMBERS SHALL BE IN DIRECT PROPORTION TO THOSE SHOWN FOR THE 1" HIGH LETTERS AND NUMBERS.

APPROVED: NOVEMBER 22, 2002	STATE OF MINNESOTA DEPARTMENT OF TRANSPORTATION	REVISION	DETAIL NO.
Daniel L Morgan STATE BRIDGE ENGINEER	BRIDGE NAMEPLATE (FOR NEW BRIDGES)		B101

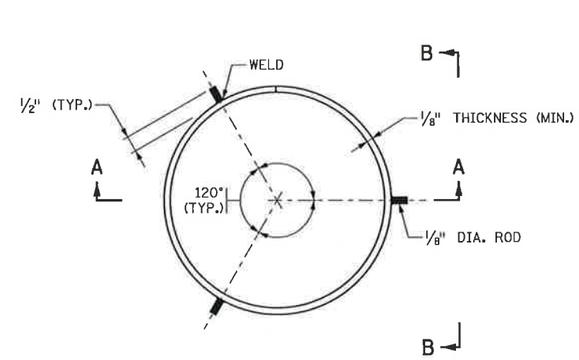

PLAN VIEW SPLICE

PILE NOT SHOWN

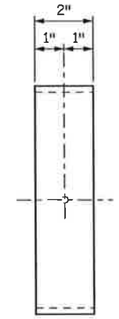

SECTION B-B

PILE NOT SHOWN

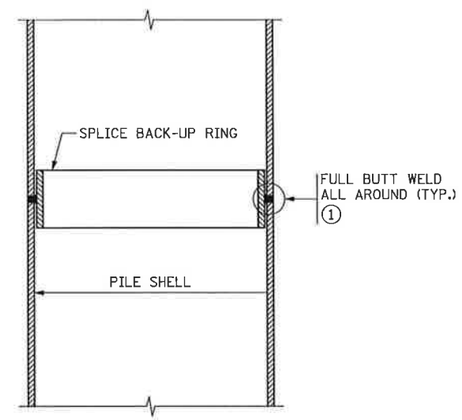

SECTION A-A

NOTES:

APPROVED COMMERCIAL PILE SPLICE BACK-UP RING MAY BE USED IN LIEU OF THE TYPE DETAILED. BACK-UP RING SHALL HAVE A TIGHT FIT.

WELDING ELECTRODES SHALL BE CELLULOSIC TYPE ELECTRODES E-6010 OR E-6011.

ELECTRODES WHICH HAVE BECOME WET, SOILED OR DAMAGED SHALL NOT BE USED.

WELDING SHALL NOT BE DONE WHEN THE AMBIENT TEMPERATURE IS LOWER THAN 0° F. OR WHEN THE PILE IS WET OR EXPOSED TO FALLING RAIN OR SNOW. WHEN THE PILE METAL TEMPERATURE IS BELOW 32° F., THE PILE METAL IN THE AREA OF THE WELD SHALL BE HEATED TO A MINIMUM TEMPERATURE OF 70° F. AND MAINTAINED AT THIS TEMPERATURE DURING WELDING.

(1) FOR PILE SHELL THICKNESSES GREATER THAN 1/2", USE A B-U4a WELD CONFIGURATION.

APPROVED: NOVEMBER 22, 2002	STATE OF MINNESOTA DEPARTMENT OF TRANSPORTATION	REVISION	DETAIL NO.
Daniel L Morgan STATE BRIDGE ENGINEER	PILE SPLICE (CAST-IN-PLACE CONCRETE PILES)		B201

NO	DATE	BY	CKD	APPR	REVISION

...\br\final\plan\6962_det01.dgn

I hereby certify that this plan, specification, or report was prepared by me or under my direct supervision and that I am a duly Licensed Professional Engineer under the laws of the State of Minnesota.

Print Name: JANET ELIZABETH GRONERT

Janet Elizabeth Gronert

Date 2/21/12 License # 44325

STATE PROJ. NO. 0702-116

BRIDGE NO. 07587

DRAWN BY B. SIMON
DESIGNED BY J. GRONERT
CHECKED BY L. ERICKSON
COMM. NO. 6962

SRF CONSULTING GROUP, INC.

BLUE EARTH COUNTY

DETAILS

CSAH 12 OVER TH 14

(SHEET 1 OF 5)

SHEET B34 OF B43

11:00:07 AM
2/9/2012
n:\projects\6962\br\final\plan\6962_det01.dgn

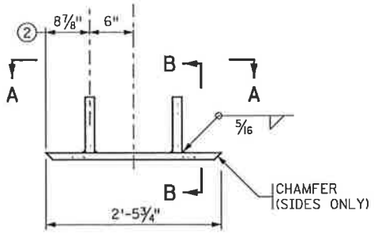

FRONT ELEVATION - OPTION 1

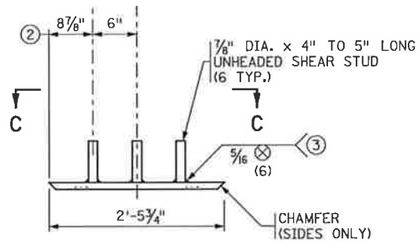

FRONT ELEVATION - OPTION 2

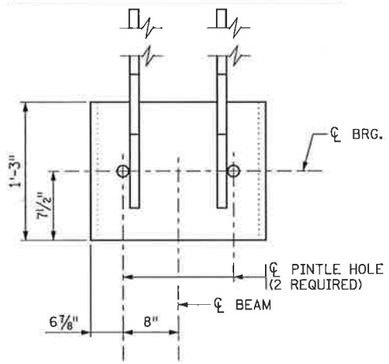

SECTION A-A

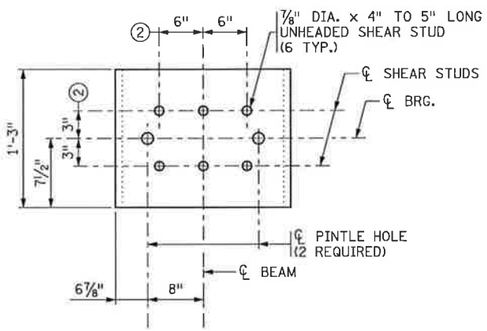

SECTION C-C

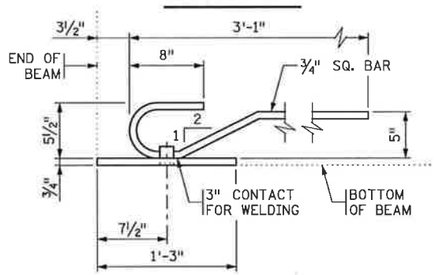

SECTION B-B

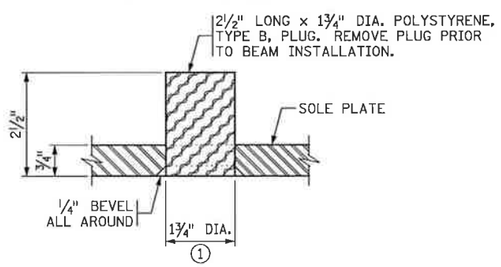

PINTLE HOLE DETAIL

NOTES:

MATERIAL TO BE STRUCTURAL STEEL PER Mn/DOT SPEC. 3306.

WELDED STUDS TO BE WELDABLE CARBON STEEL PER Mn/DOT SPEC. 3391.2D.

SOLE PLATE FOR BEARING ASSEMBLY TO BE GALVANIZED PER Mn/DOT SPEC. 3394 AFTER FABRICATION.

PINTLE HOLES SHALL BE FREE OF ZINC BUILD UP FROM GALVANIZING.

SOLE PLATES ARE INCIDENTAL TO PRESTRESSED CONCRETE BEAMS.

1 FOR 1½" DIA. PINTLES.

2 THESE DIMENSIONS MAY BE MODIFIED TO CLEAR PRESTRESSED STRANDS. HOWEVER, CHANGES MUST BE APPROVED BY THE ENGINEER.

3 THE REQUIREMENTS FOR WELDING STUDS SHALL COMPLY WITH AASHTO/AWS D1.1.

MODIFIED

APPROVED: OCTOBER 26, 2005	STATE OF MINNESOTA DEPARTMENT OF TRANSPORTATION	REVISED 06-14-2006 10-28-2008 03-30-2010	DETAIL NO.
Daniel L Dorgan STATE BRIDGE ENGINEER	SOLE PLATE (PRESTRESSED CONCRETE BEAMS) (FOR BEARINGS WITH PINTLES)		B303

NO	DATE	BY	CKD	APPR	REVISION

...\br\final\plan\6962_de+01.dgn

I hereby certify that this plan, specification, or report was prepared by me or under my direct supervision and that I am a duly Licensed Professional Engineer under the laws of the State of Minnesota.

Print Name: JANET ELIZABETH GRONERT

Janet Elizabeth Gronert

Date 2/21/12 License # 44325

STATE PROJ. NO. 0702-116

BRIDGE NO. 07587

DRAWN BY B. SIMON
DESIGNED BY J. GRONERT
CHECKED BY L. ERICKSON
COMM. NO. 6962

SRF CONSULTING GROUP, INC.

BLUE EARTH COUNTY
DETAILS
CSAH 12 OVER TH 14
(SHEET 2 OF 5)

SHEET B35 OF B43

11:00:07 AM
2/9/2012
h:\projects\6962\br\final\plan\6962_de+01.dgn

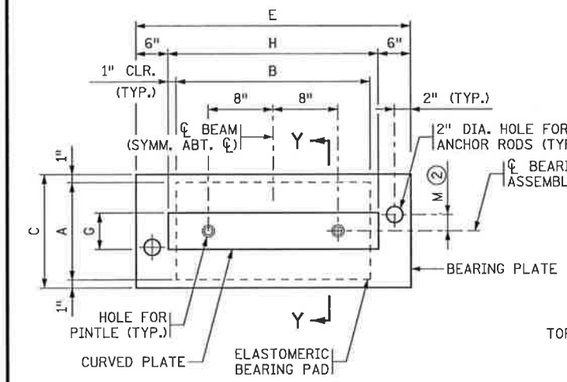

PLAN

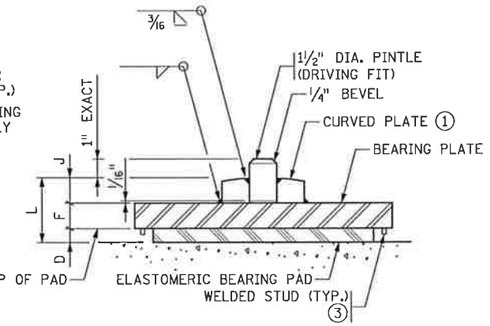

SECTION Y-Y

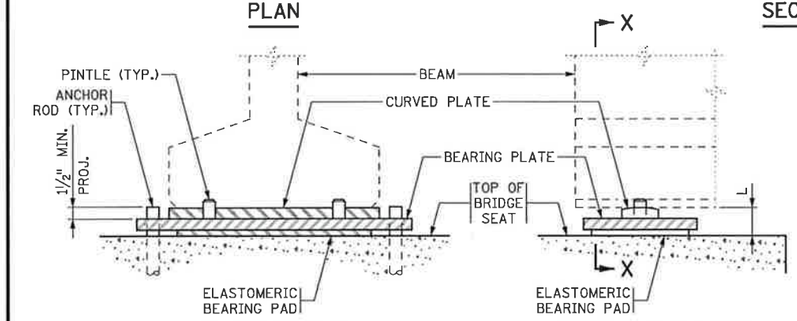

SECTION X-X

SIDE ELEVATION

ANCHOR RODS NOT SHOWN

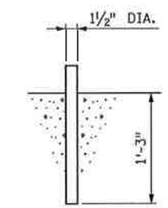

ANCHOR ROD DETAIL

TABLE

ASSEMBLY TYPE	LOCATION	BEAM SIZE	BEARING PAD SIZE			SHAPE FACTOR	BEARING PLATE SIZE			CURVED PLATE SIZE			ANCHOR ROD OFFSET		ASSY. HEIGHT	CURVED PLATE
			A	B	D		C	E	F	G	H	J	+/- 2	M	L	R 1
F1	PIER	MN54	12"	24"	½"	8.0	14"	38"	1½"	4½"	26"	1¼"	-	-	3¼"	16"

NOTES:

ELASTOMERIC MATERIALS AND PAD CONSTRUCTION SHALL COMPLY WITH Mn/DOT SPEC. 3741.

ALL STEEL PLATES SHALL COMPLY WITH Mn/DOT SPEC. 3306.

ANCHOR RODS SHALL COMPLY WITH Mn/DOT SPEC. 3306. GALVANIZE PER Mn/DOT SPEC. 3394.

PINTLES SHALL COMPLY WITH Mn/DOT SPEC. 3309.

GALVANIZE STRUCTURAL STEEL BEARING ASSEMBLY AFTER FABRICATION PER Mn/DOT SPEC. 3394, EXCEPT AS NOTED.

PAYMENT FOR BEARING ASSEMBLY SHALL INCLUDE ALL MATERIAL ON THIS DETAIL.

1 THE MIN. RADIUS SHALL BE 16" UNLESS OTHERWISE SPECIFIED IN THE TABLE. THE MAX. RADIUS SHALL BE 24". FINISH TO 250 MICRO. THE FINISHED THICKNESS OF THE PLATE MAY BE 1/16" LESS THAN SHOWN.

2 "+" DENOTES OFFSET AS SHOWN. "-" DENOTES OFFSET OPPOSITE OF SHOWN.

3 5/16" DIA. x ⅜" KNOCK-OFF WELD STUDS INSTALLED ON BEARING PLATE AROUND PERIMETER OF BEARING PAD. CENTERLINE STUD TO EDGE OF PAD DIMENSION = ½", MAX. STUD SPACING = 4", AND MAX. SPACING TO PAD CORNER = 2".

DESIGN DATA:

MAXIMUM HORIZONTAL LOAD IS 70 KIPS FOR 1½" PINTLES.

APPROVED: OCTOBER 26, 2005	STATE OF MINNESOTA DEPARTMENT OF TRANSPORTATION	REVISED 08-10-2006 10-28-2008	DETAIL NO.
Daniel L Dorgan STATE BRIDGE ENGINEER	CURVED PLATE BEARING ASSEMBLY (PRESTRESSED CONCRETE BEAMS) (FIXED)		B310

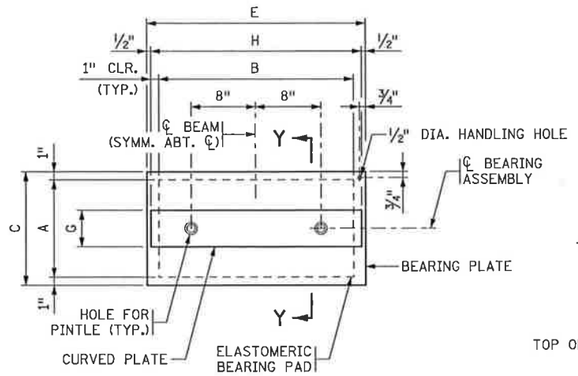

PLAN

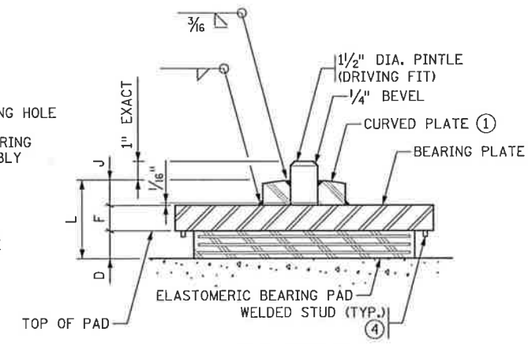

SECTION Y-Y

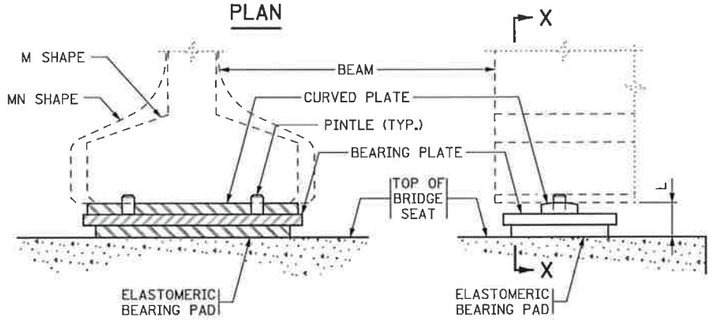

SECTION X-X

SIDE ELEVATION

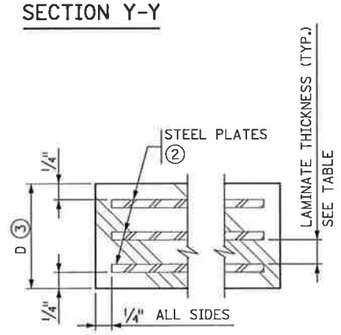

SECTION THROUGH ELASTOMERIC BEARING PAD

TABLE

ASSEMBLY TYPE	LOCATION	BEAM SIZE	BEARING PAD SIZE			STEEL PLATES		LAMINATES		SHAPE FACTOR	BEARING PLATE SIZE			CURVED PLATE SIZE			ASSY. HEIGHT	CURVED PLATE
			A	B	D	NO.	THICK.	NO.	THICK.		C	E	F	G	H	J	L	R ①
E1	N & S ABUT.	MN54	12"	24"	2 1/2"	4	1/8"	3	1/2"	8.0	14"	27"	1 1/2"	4 1/2"	26"	1 1/4"	5 1/4"	16"
E2	PIER	MN54	12"	24"	1/2"	-	-	-	-	8.0	14"	27"	1 1/2"	4 1/2"	26"	1 1/4"	3 1/4"	16"

NOTES:

ELASTOMERIC MATERIALS AND PAD CONSTRUCTION SHALL COMPLY WITH Mn/DOT SPEC. 3741.

ALL STEEL PLATES SHALL COMPLY WITH Mn/DOT SPEC. 3306.

PINTLES SHALL COMPLY WITH Mn/DOT SPEC. 3309.

GALVANIZE STRUCTURAL STEEL BEARING ASSEMBLY AFTER FABRICATION PER Mn/DOT SPEC. 3394, EXCEPT AS NOTED.

PAYMENT FOR BEARING ASSEMBLY SHALL INCLUDE ALL MATERIAL ON THIS DETAIL.

① THE MIN. RADIUS SHALL BE 16" UNLESS OTHERWISE SPECIFIED IN THE TABLE. THE MAX. RADIUS SHALL BE 24". FINISH TO 250 MICRO. THE FINISHED THICKNESS OF THE PLATE MAY BE 1/16" LESS THAN SHOWN.

② DO NOT GALVANIZE THESE PLATES.

③ THE TOTAL THICKNESS SHOWN INCLUDES THE STEEL PLATES.

④ 5/16" DIA. x 3/8" KNOCK-OFF WELD STUDS INSTALLED ON BEARING PLATE AROUND PERIMETER OF BEARING PAD. CENTERLINE STUD TO EDGE OF PAD DIMENSION = 1/2", MAX. STUD SPACING = 4", AND MAX. SPACING TO PAD CORNER = 2".

DESIGN DATA:

MAXIMUM HORIZONTAL LOAD IS 70 KIPS FOR 1 1/2" PINTLES.

APPROVED: OCTOBER 26, 2005

STATE BRIDGE ENGINEER

STATE OF MINNESOTA
DEPARTMENT OF TRANSPORTATION

CURVED PLATE BEARING ASSEMBLY

(PRESTRESSED CONCRETE BEAMS)
(EXPANSION)

REVISED
08-10-2006
10-28-2008
03-30-2010

DETAIL NO.

B311

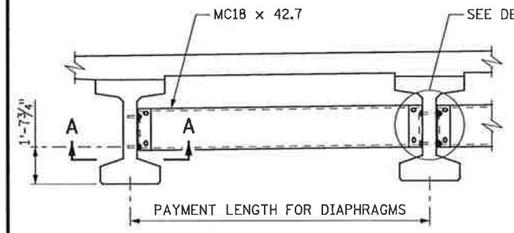

PART TRANSVERSE SECTION AT DIAPHRAGM

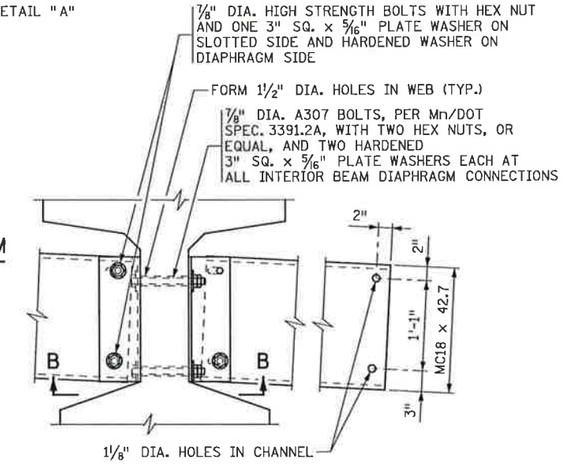

DETAIL "A"

INTERIOR BEAM WITH CONTINUOUS LINE OF DIAPHRAGMS

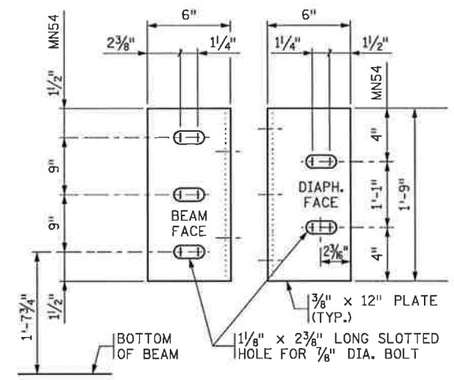

DIAPHRAGM CONNECTION

MN54

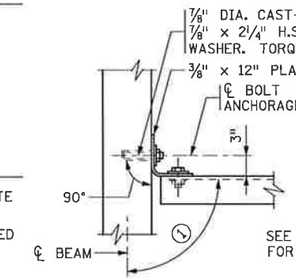

SECTION A-A

TYPICAL SECTION AT ALL FASCIA BEAMS

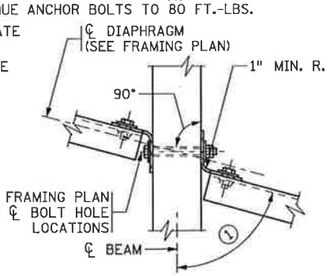

SECTION B-B

TYPICAL SECTION AT INTERIOR BEAM WITH CONTINUOUS OR STAGGERED INTERMEDIATE DIAPHRAGMS

NOTES:

ALL STEEL SHALL CONFORM TO Mn/DOT SPEC. 3306.

INSTALLATION SHALL CONFORM TO Mn/DOT SPEC. 2405.3M.

THE LEG OF THE 12" PLATE SHALL BE SHOP BENT TO CONFORM TO THE DIAPHRAGM. A 3/8" x 6" x 6" ANGLE MAY BE USED FOR DIAPHRAGMS PERPENDICULAR TO BEAMS.

ALL STRUCTURAL STEEL SHOWN ON THIS DETAIL, INCLUDING BOLTS AND WASHERS, SHALL BE INCLUDED IN UNIT PRICE BID FOR DIAPHRAGMS FOR PRESTRESSED BEAMS.

BENT PLATES MAY BE USED IN PLACE OF CHANNELS. THE BENT PLATES MUST BE THE SAME HEIGHT AS THE CHANNELS THEY REPLACE, BE 5/16" IN THICKNESS, AND HAVE LEGS 5" LONG.

STEEL PLATES AND SHAPES SHALL BE GALVANIZED IN ACCORDANCE WITH Mn/DOT SPEC. 3394.

GALVANIZE BOLTS, NUTS AND WASHERS PER Mn/DOT SPEC. 3392.

① FOR SKEW ANGLES UNDER 20°, USE 90° LESS THE SKEW ANGLE. FOR SKEW ANGLES OVER 20°, USE 90°.

MODIFIED

APPROVED: OCTOBER 26, 2005

STATE BRIDGE ENGINEER

STATE OF MINNESOTA
DEPARTMENT OF TRANSPORTATION

STEEL INTERMEDIATE DIAPHRAGM

(FOR 36M - 54M, MN45 - MN63 PRESTRESSED CONCRETE BEAMS)

REVISED
06-14-2006
10-22-2009

DETAIL NO.

B403

NO	DATE	BY	CKD	APPR	REVISION

...\br\final\plan\6962_det01.dgn

I hereby certify that this plan, specification, or report was prepared by me or under my direct supervision and that I am a duly Licensed Professional Engineer under the laws of the State of Minnesota.

Print Name: JANET ELIZABETH GRONERT

Date 2/21/12 License # 44325

STATE PROJ. NO. 0702-116

BRIDGE NO. 07587

DRAWN BY B. SIMON
DESIGNED BY J. GRONERT
CHECKED BY L. ERICKSON
COMM. NO. 6962

SRF CONSULTING GROUP, INC.

BLUE EARTH COUNTY

DETAILS

CSAH 12 OVER TH 14

(SHEET 3 OF 5)

SHEET B36 OF B43

11:00:07 AM
2/9/2012
H:\projects\6962\br\final\plan\6962_det01.dgn

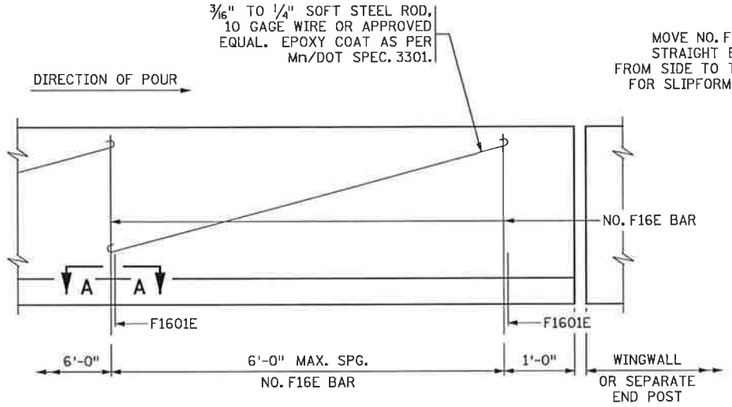

INSIDE ELEVATION OF RAILING

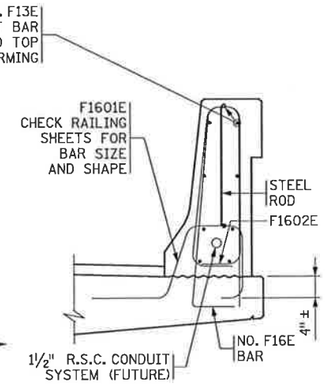

TYPE F - RAILING SECTION

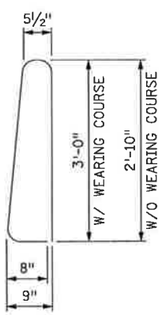

NO. F16E BAR

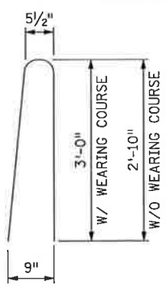

NO. F16E BAR

DRILLED IN ALTERNATE

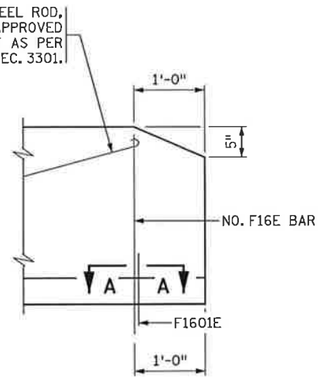

INSIDE ELEVATION OF RAILING

AT END OF WINGWALL

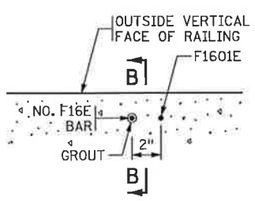

SECTION A-A

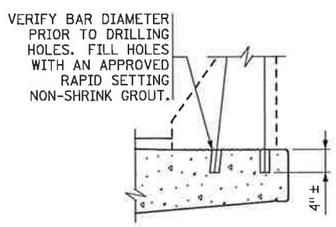

SECTION B-B

INSTALLATION DETAILS
FOR NO. F16E (DRILLED IN ALTERNATE)

NOTES:

CONTRACTOR WILL TOOL V-GROOVE AT DEFLECTION JOINTS AT TIME RAIL IS CAST AND SHALL EXTEND V-GROOVE AROUND ENTIRE PERIMETER OF RAIL.

FOR ADDITIONAL DIMENSIONS, DETAILS, REINFORCEMENT AND NOTES SEE RAILING SHEET.

FORM RAIL FOR A MINIMUM OF 2' ON EACH SIDE OF EXPANSION DEVICES, LIGHT STANDARDS AND DECK DRAIN BOX OUTS.

PAY QUANTITIES WILL NOT BE ADJUSTED AS A RESULT OF SELECTING THIS ALTERNATE.

USE A SIMILAR METHOD FOR TALLER RAILINGS OR MODIFIED VERSIONS OF THIS RAILING.

MODIFIED

APPROVED: NOVEMBER 22, 2002	STATE OF MINNESOTA DEPARTMENT OF TRANSPORTATION	REVISION	DETAIL NO.
Daniel L Dorgan STATE BRIDGE ENGINEER	CONCRETE RAILING (TYPE F) (SLIPFORM ALTERNATE)		B830

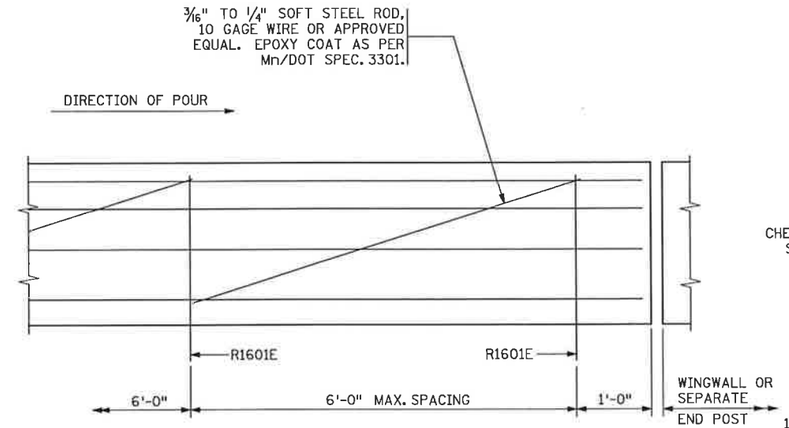

INSIDE ELEVATION OF RAILING

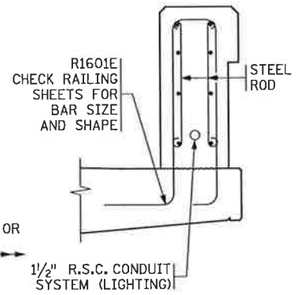

RAILING SECTION

FENCE NOT SHOWN

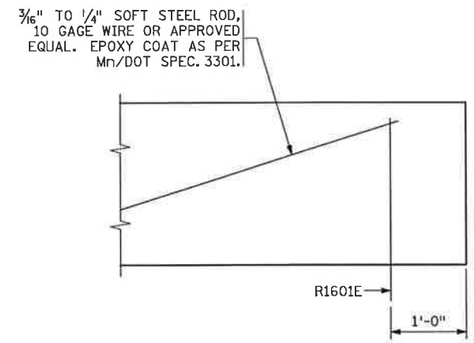

INSIDE ELEVATION OF RAILING

AT END OF WINGWALL

NOTES:

CONTRACTOR WILL TOOL V-GROOVE AT DEFLECTION JOINTS AT TIME RAIL IS CAST AND SHALL EXTEND V-GROOVE AROUND ENTIRE PERIMETER OF RAIL.

FOR ADDITIONAL DIMENSIONS, DETAILS, REINFORCEMENT AND NOTES SEE RAILING SHEET.

FORM RAIL FOR A MINIMUM OF 2' ON EACH SIDE OF EXPANSION DEVICES, LIGHT STANDARDS AND DECK DRAIN BOX OUTS.

PAY QUANTITIES WILL NOT BE ADJUSTED AS A RESULT OF SELECTING THIS ALTERNATE.

USE A SIMILAR METHOD FOR TALLER RAILINGS OR MODIFIED VERSIONS OF THIS RAILING.

MODIFIED

APPROVED: NOVEMBER 22, 2002	STATE OF MINNESOTA DEPARTMENT OF TRANSPORTATION	REVISION	DETAIL NO.
Daniel L Dorgan STATE BRIDGE ENGINEER	CONCRETE RAILING (TYPE P-1) (SLIPFORM ALTERNATE)		B831

NO	DATE	BY	CKD	APPR	REVISION

...\br\final\plan\6962_det01.dgn

I hereby certify that this plan, specification, or report was prepared by me or under my direct supervision and that I am a duly Licensed Professional Engineer under the laws of the State of Minnesota.

Print Name: JANET ELIZABETH GRONERT

Janet Elizabeth Gronert

Date 2/21/12 License # 44325

STATE PROJ. NO. 0702-116

BRIDGE NO. 07587

DRAWN BY B. SIMON
DESIGNED BY J. GRONERT
CHECKED BY L. ERICKSON
COMM. NO. 6962

SRF CONSULTING GROUP, INC.

BLUE EARTH COUNTY
DETAILS
CSAH 12 OVER TH 14
(SHEET 4 OF 5)

SHEET B37 OF B43

11:00:17 AM
2/5/2012
n:\projects\6962\br\final\plan\6962_det01.dgn

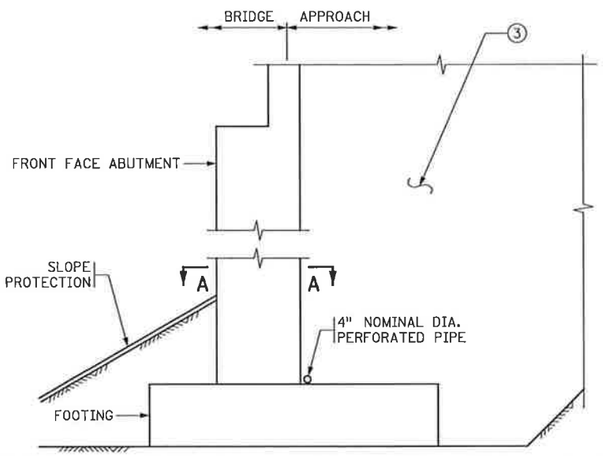

SECTION THROUGH PARAPET AND SEMI INTEGRAL ABUTMENTS

SUMMARY OF QUANTITIES FOR DRAINAGE SYSTEM

	4" DIA. PERFORATED PIPE	158	LIN. FT.
	4" DIA. NON-PERFORATED PIPE	40	LIN. FT.
	45° ELBOW	2	EACH
	4" DIA. END CAP	2	EACH
	4" DIA. COUPLING	2	EACH
	PIPE SLEEVE	2	EACH
①	PRECAST CONCRETE HEADWALL	2	EACH

THE SUMMARY OF QUANTITIES FOR DRAINAGE SYSTEM IS AS SHOWN ABOVE. ANY ADDITIONAL MINOR ITEMS OR SLIGHT CHANGES OF QUANTITIES REQUIRED SHALL BE FURNISHED BY THE CONTRACTOR WITH NO ADDITIONAL COMPENSATION.

PAYMENT WILL BE INCLUDED IN THE SINGLE LUMP SUM PRICE FOR ITEM 2502.502 "DRAINAGE SYSTEM TYPE (B910)".

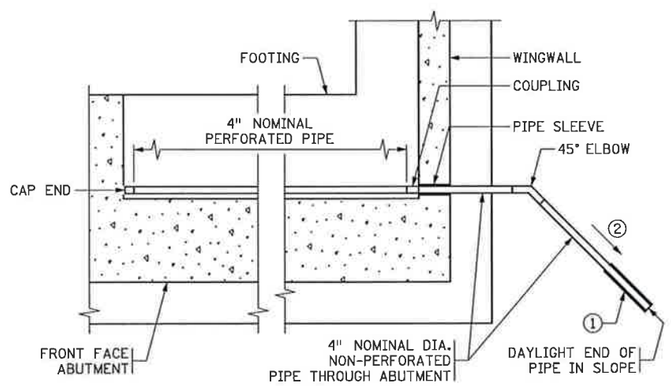

SECTION A-A

NOTES:

ALL PIPE SHALL COMPLY WITH Mn/DOT SPEC. 3245.

WRAP PERFORATED PIPE WITH GEOTEXTILE AS PER Mn/DOT SPEC. 3733, TYPE 1. ATTACH TO PIPE AS PER Mn/DOT SPEC. 2502.

① PRECAST CONCRETE HEADWALL WITH RODENT SCREEN. SEE STANDARD PLATE 3131 FOR DETAILS.

② 1/8" PER FT. MINIMUM SLOPE.

③ MATERIAL SHALL COMPLY WITH Mn/DOT SPEC. 3149.2B SELECT GRANULAR BORROW, MODIFIED SO THAT NO MORE THAN 10% PASSES A NO. 200 SIEVE. (UNDER GRADING PORTION OF CONTRACT)

MODIFIED

APPROVED: MARCH 26, 2009	STATE OF MINNESOTA DEPARTMENT OF TRANSPORTATION	REVISED 10-22-2009	DETAIL NO.
Daniel L Dorgan STATE BRIDGE ENGINEER	DRAINAGE SYSTEM		B910

NO	DATE	BY	CKD	APPR	REVISION

...\br\final\plan\6962_det01.dgn

I hereby certify that this plan, specification, or report was prepared by me or under my direct supervision and that I am a duly Licensed Professional Engineer under the laws of the State of Minnesota.

Print Name: JANET ELIZABETH GRONERT

Janet Elizabeth Gronert

Date 2/21/12 License # 44325

STATE PROJ. NO. 0702-116

BRIDGE NO. 07587

DRAWN BY B. SIMON

DESIGNED BY J. GRONERT

CHECKED BY L. ERICKSON

COMM. NO. 6962

SRF CONSULTING GROUP, INC.

BLUE EARTH COUNTY

DETAILS

CSAH 12 OVER TH 14

(SHEET 5 OF 5)

SHEET B38 OF B43

11:00:07 AM
2/9/2012
h:\projects\6962\br\final\plan\6962_det01.dgn

CONCRETE WEARING COURSE

☐ LOW SLUMP

☐ OTHER _____
TYPE OR MANUFACTURER

EXPANSION JOINTS

JOINT MANUFACTURER _____
NAME AND ADDRESS (CITY, STATE)

MANUFACTURER'S IDENTIFICATION _____
MFR'S No. AND/OR LETTER DESIGNATION FOR JOINT USED

GLAND MANUFACTURER _____
NAME AND ADDRESS (CITY, STATE)

SIZE OF GLAND _____

MANUFACTURER'S IDENTIFICATION _____
MFR'S No. AND/OR LETTER DESIGNATION FOR GLAND USED

ELASTOMERIC BEARING PADS

PAD MANUFACTURER _____
NAME AND ADDRESS (CITY, STATE)

SPECIAL SURFACE FINISH

SYSTEM: _____ COLOR: _____

FINISHING ROADWAY FACES OF BARRIER RAILING

TYPE: _____ COLOR: _____

ANTI-GRAFFITI COATING

MANUFACTURER _____
NAME AND ADDRESS (CITY, STATE)

PRODUCT NAME: _____ LOCATION: _____

PAINT SYSTEM

Mn/DOT SPECIFICATION NUMBER _____
2478 OR 2479 OR OTHER

MANUFACTURER _____
NAME AND ADDRESS (CITY, STATE)

PRIME COAT _____
Mn/DOT MATERIAL SPECIFICATION NUMBER

INTERMEDIATE COAT _____
Mn/DOT MATERIAL SPECIFICATION NUMBER

FINISH COAT _____ _____
Mn/DOT MATERIAL SPECIFICATION NUMBER COLOR

PLAN QUALITY

RATE 1 (AGREE), 2 (NEUTRAL), OR 3 (DISAGREE, PLEASE COMMENT BELOW)

DIMENSIONING AND DETAILING ADEQUATELY DESCRIBED REQUIRED CONSTRUCTION. _____

BAR LISTS AND QUANTITIES WERE TYPICALLY COMPLETE AND FREE OF ERRORS. _____

SCALE OF DRAWINGS AND OVERALL LEGIBILITY OF LINES AND TEXT WAS GOOD. _____

(SB) SPECIAL PROVISIONS ADEQUATELY DESCRIBED SPECIAL WORK AND PAYMENT. _____

COMMENTS: _____

NUMBER OF BRIDGE SUPPLEMENTAL AGREEMENTS: _____ COST: $ _____

LIST SIGNIFICANT ERRORS OR OMISSIONS IN PLAN DETAILS OR PAY QUANTITIES IN THE SPACE PROVIDED AT RIGHT.

OTHER ITEMS ①

① UTILITIES ADDED DURING CONSTRUCTION AND SPECIALTY ITEMS.

FINAL QUANTITIES ENTERED ON SCHEDULE OF QUANTITIES: YES ☐ NO ☐

SUMMARY OF SIGNIFICANT AS-BUILT CHANGES

THE AS-BUILT INFORMATION WAS ADDED TO THE PLAN BY:

_____ _____
INSPECTOR(S) SIGNATURE DATE

CHECKED BY: _____ _____
PROJECT ENGINEER/SUPERVISOR SIGNATURE DATE

AT THE TIME OF THE FINAL, THIS COMPLETED AS-BUILT BRIDGE DATA SHEET MUST BE SUBMITTED TO THE BRIDGE OFFICE - ATTN: REGIONAL CONSTRUCTION ENGINEER (MS610).

REVISION: 05-27-2005

APPROVED: SEPTEMBER 26, 2003

Daniel J. Hagen
STATE BRIDGE ENGINEER

AS-BUILT DETAILS
(AS NEEDED)

FIG. 5-397.900

NO	DATE	BY	CKD	APPR	REVISION

...\br\final\plan\6962_det03.dgn

STATE PROJ. NO. 0702-116

BRIDGE NO. 07587

DRAWN BY B. SIMON
DESIGNED BY
CHECKED BY L. ERICKSON
COMM. NO. 6962

SRF CONSULTING GROUP, INC.

BLUE EARTH COUNTY
AS BUILT BRIDGE DATA
CSAH 12 OVER TH 14

SHEET B39 OF B43

11:00:08 AM
2/9/2012
n:\projects\6962\br\final\plan\6962_det03.dgn

CONTRACTED PROFILE

SCALE : 0 50' 100' HORIZONTAL — 0 5' 10' VERTICAL

PROFILE @ 12' LT. ℄ NB CSAH 12 (NBCSAH12G)

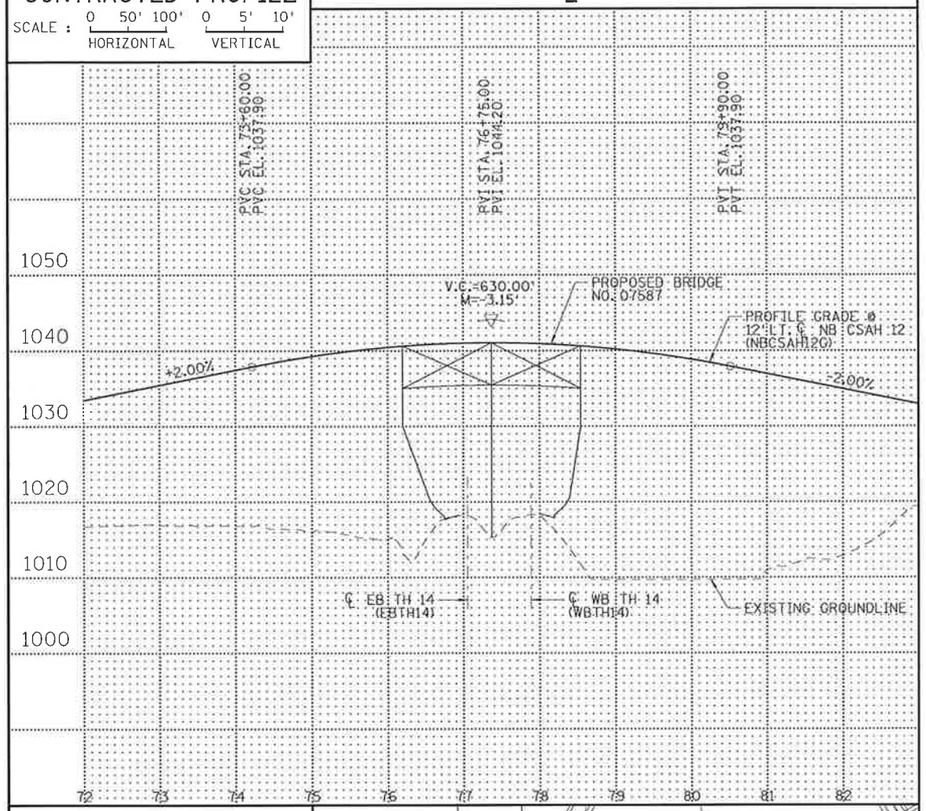

PLAT

SCALE : 0 50' 100'

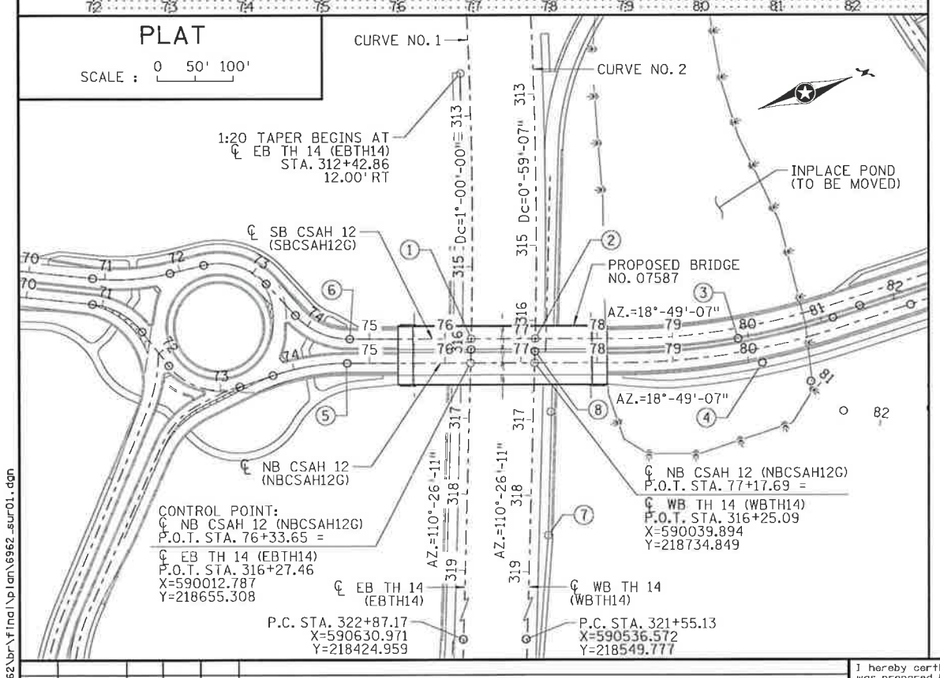

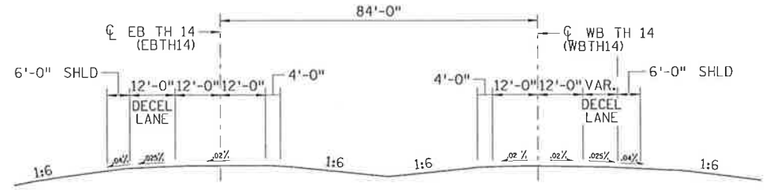

TYPICAL APPROACH SECTION - TH 14

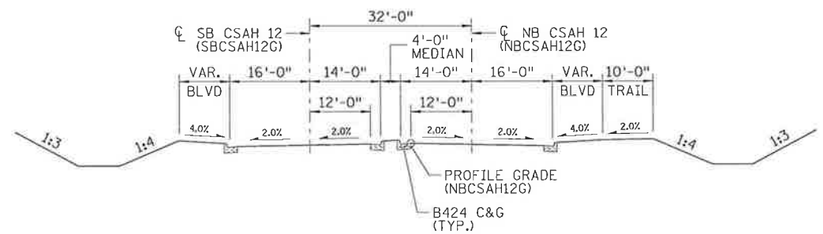

TYPICAL APPROACH SECTION - CSAH 12

CURVE NO. 1 DATA	CURVE NO. 2 DATA
℄ EB TH 14 (EBTH14)	℄ WB TH 14 (WBTH14)
P.I. STA. 305+68.21	P.I. STA. 305+83.83
X=588997.649	X=589012.340
Y=219033.569	Y=219117.737
Δ = 21°-04'-15"	Δ = 21°-04'-15"
D = 1°-00'-00"	D = 0°-59'-07"
T = 1065.58'	T = 1081.20'
L = 2107.09'	L = 2137.98'
R = 5729.58'	R = 5813.58'
P.C. STA. 295+02.63	P.C. STA. 295+02.63
X=587932.134	X=587931.204
Y=219021.770	Y=219105.765
P.T. STA. 316+09.72	P.T. STA. 316+40.61
X=589996.162	X=590025.492
Y=218661.503	Y=218740.216

1. ℄ SB CSAH 12 (SBCSAH12G) P.O.T. STA. 76+34.54 = ℄ EB TH 14 (EBTH14) P.O.C. STA. 315+95.45
   X=589982.784
   Y=218666.469
2. ℄ SB CSAH 12 (SBCSAH12G) P.O.T. STA. 77+18.57 = ℄ WB TH 14 (WBTH14) P.O.C. STA. 316+23.97
   X=590009.889
   Y=218746.005
3. P.C. STA. 79+86.63
   X=590096.359
   Y=218999.737
4. P.C. STA. 80+18.59
   X=590136.956
   Y=219019.662
5. P.T. STA. 74+69.96
   X=589959.984
   Y=218500.365
6. STATION EQUATION:
   STA. 74+58.85 (BK) = STA. 74+73.51 (AH)
   P.T. STA. 74+73.51
   X=589930.840
   Y=218514.049
7. 1:20 TAPER BEGINS AT ℄ WB TH 14 (WBTH14)
   STA. 318+51.57
   24.00' LT
8. STATION EQUATION:
   ℄ WB TH 14 (WBTH14)
   STA. 316+40.61 (BK) = STA. 316+09.72 (AH)
   X=590025.492
   Y=218740.216

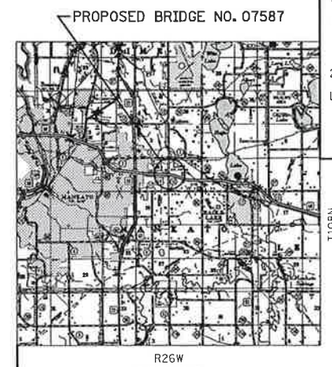

INDEX MAP

LOCATION ENGINEER'S OBSERVATIONS AT BRIDGE SITE

SPECIAL FEATURES: WATERFALLS, DAMS, FLOODS, ICE, DEBRIS, SLIDING BANKS, RECREATIONAL BOATING.

2. OTHER BRIDGES OR CULVERTS OVER THE SAME STREAM (PARTICULARLY STRUCTURES WHICH CARRY HIGH WATER WITHOUT OVERFLOW OF ROADWAY): GIVEN LOCATION, TYPE, LENGTH, HEIGHT ABOVE HIGH WATER, CROSS-SECTIONAL AREA ETC.

APPARENT HIGHWATER ELEVATION OBTAINED FROM:

4. OTHER DATA: APPROX. VELOCITY OF WATER AT TIME OF SURVEY.

HYDRAULIC ENGINEERS RECOMMENDATION

DATE

STREAM OR DITCH DESIGNATION

DRAINAGE AREA

MAX. FLOOD ON RECORD

MAXIMUM OBSERVED HIGHWATER ELEVATION

DESIGN FLOOD (YR. FREQ.) C.F.S.

DESIGN STAGE ELEVATION

DESIGN MEAN VELOCITY THROUGH STRUCTURE F.P.S.

TOTAL STAGE INCREASE FT.

LOW MEMBER AT OR ABOVE ELEVATION

FLOWLINE ELEVATION SKEW ANGLE

WATERWAY AREA REQUIRED BELOW ELEVATION = SQ.FT.
AT RIGHT ANGLES TO CHANNEL

BASIC FLOOD (100 YR. FREQ.) C.F.S.

STAGE ELEVATION FT.

TOTAL STAGE INCREASE FT.

MEAN VELOCITY THROUGH STRUCTURE F.P.S.

ESTIMATED DEPTH OF PIER SCOUR = FT.

SCOUR CODE =

BRIDGE SURVEY SHEETS MADE FROM :

HORIZONTAL DATUM IS NAD83.

BENCH MARK ELEVATION 1003.22 (NAVD88)

LOCATION STATION 108+20 (CSAH 12), 210' RT

2nd BENCH MARK ELEVATION 1010.917 (NAVD88)

LOCATION STATION 223+94 (CSAH 3), 85' LT

5' SFP FLUSH WITH GROUND, PUNCH MARK IN MIDDLE OF "T"

X = 591185.035, Y = 221831.624

MINNESOTA
DEPARTMENT OF TRANSPORTATION

BRIDGE SURVEY

AT MILE POINT ON

PROPOSED BRIDGE LOCATED 3.7 MILES (T.H., C.S.A.H., C.R. etc.) E OF JCT. CSAH 5 AND TH 14

SEC 10/11 TWP T108N R 26W

CITY MANKATO COUNTY BLUE EARTH

NO	DATE	BY	CKD	APPR	REVISION

...\br\final\plan\6962_sur01.dgn

I hereby certify that this plan, specification, or report was prepared by me or under my direct supervision and that I am a duly Licensed Professional Engineer under the laws of the State of Minnesota.

Print Name: JANET ELIZABETH GRONERT

Date 2/21/12 License # 44325

STATE PROJ. NO. 0702-116

BRIDGE NO. 07587

DRAWN BY E. JOHNSON
DESIGNED BY J. GRONERT
CHECKED BY L. ERICKSON
COMM. NO. 6962

SRF CONSULTING GROUP, INC.

BLUE EARTH COUNTY
BRIDGE SURVEY
CSAH 12 OVER TH 14

SHEET B40 OF B43

11:00:10 AM
2/9/2012
h:\projects\6962\br\final\plan\6962_sur01.dgn

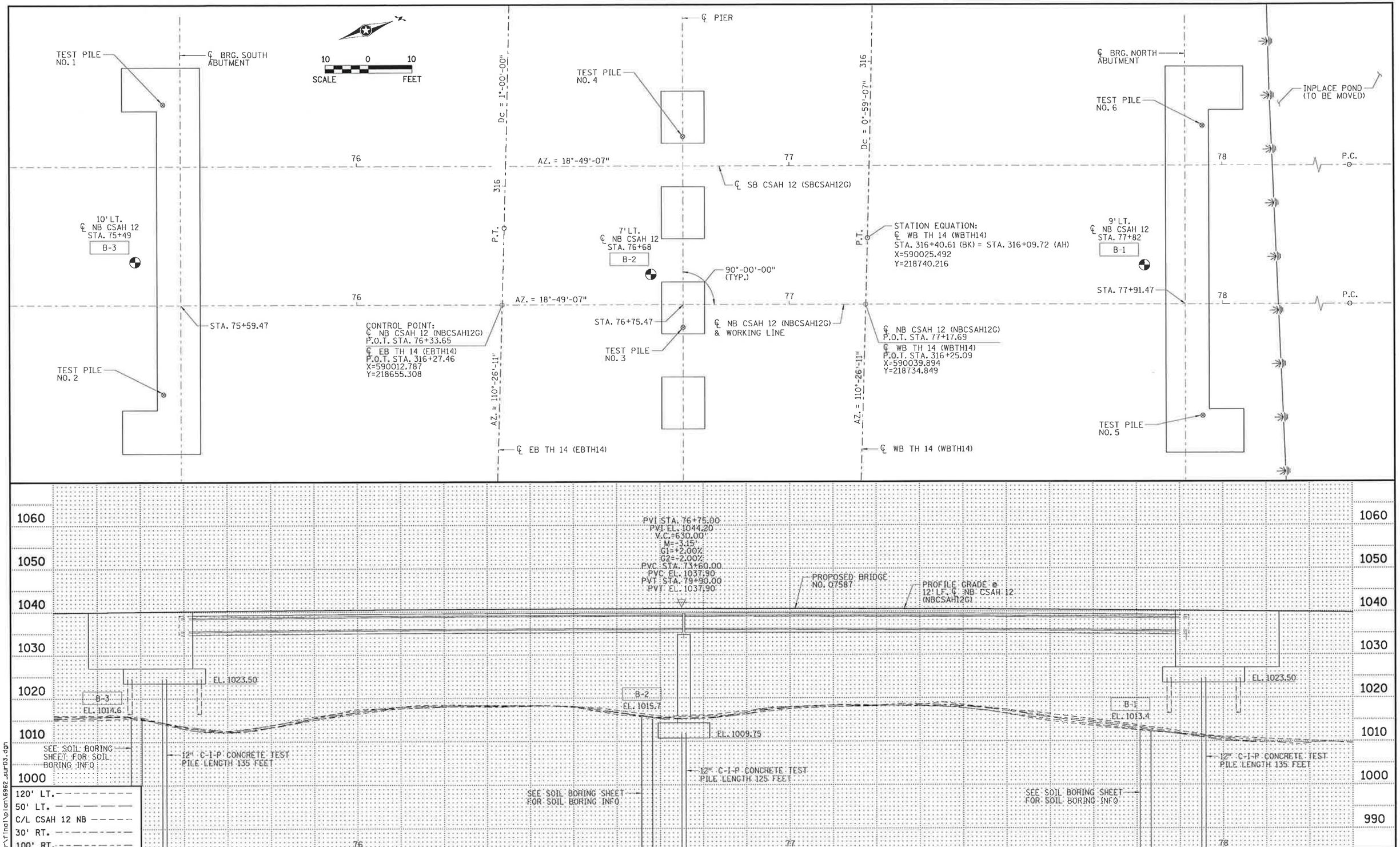

NO	DATE	BY	CKD	APPR	REVISION

...\br\final\plan\6962_sur03.dgn

I hereby certify that this plan, specification, or report was prepared by me or under my direct supervision and that I am a duly Licensed Professional Engineer under the laws of the State of Minnesota.

Print Name: JANET ELIZABETH GRONERT

Janet Elizabeth Gronert

Date 2/21/12 License # 44325

STATE PROJ. NO. 0702-116

BRIDGE NO. 07587

DRAWN BY E. JOHNSON

DESIGNED BY J. GRONERT

CHECKED BY L. ERICKSON

COMM. NO. 6962

SRF CONSULTING GROUP, INC.

BLUE EARTH COUNTY

BRIDGE SURVEY PLAN & PROFILE

CSAH 12 OVER TH 14

SHEET B41 OF B43

11:00:11 AM
2/9/2012
h:\projects\6962\br\final\plan\6962_sur03.dgn

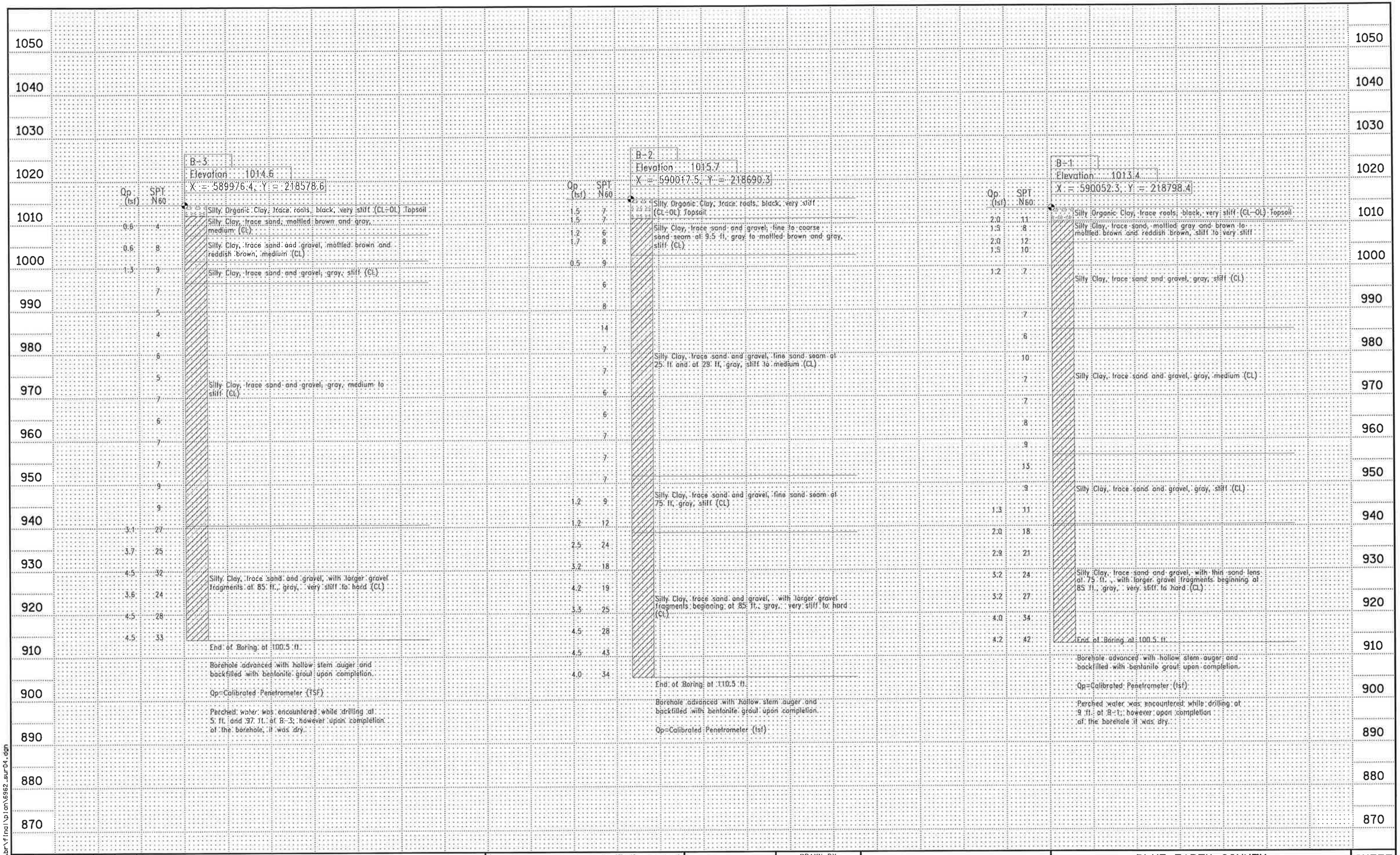

NO	DATE	BY	CKD	APPR	REVISION

...\br\final\plan\6962_sur04.dgn

I hereby certify that this plan, specification, or report was prepared by me or under my direct supervision and that I am a duly Licensed Professional Engineer under the laws of the State of Minnesota.

Print Name: JANET ELIZABETH GRONERT

Janet Elizabeth Gronert

Date 2/21/12 License # 44325

STATE PROJ. NO. 0702-116

BRIDGE NO. 07587

DRAWN BY E. JOHNSON
DESIGNED BY J. GRONERT
CHECKED BY L. ERICKSON
COMM. NO. 6962

SRF CONSULTING GROUP, INC.

BLUE EARTH COUNTY

SOIL BORINGS

CSAH 12 OVER TH 14

SHEET B42 OF B43

11:00:11 AM
2/9/2012
H:\projects\6962\br\final\plan\6962_sur04.dgn

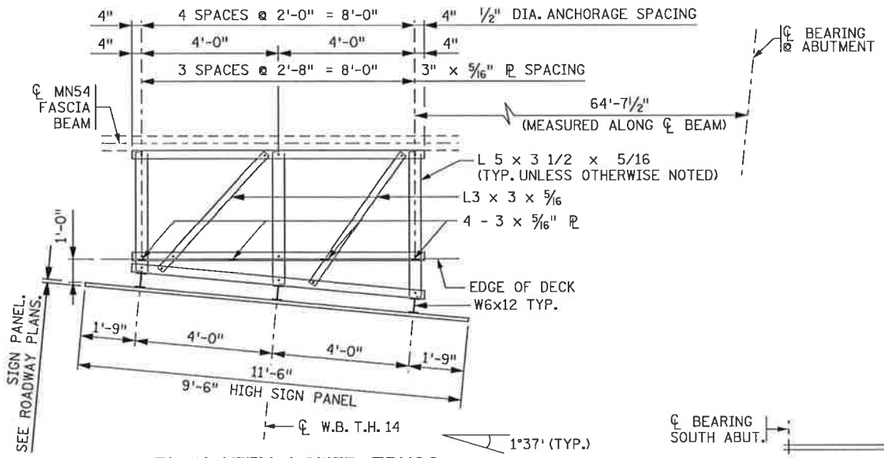

PLAN VIEW LOWER TRUSS

138" W x 114" H OVERHEAD SIGN PANEL

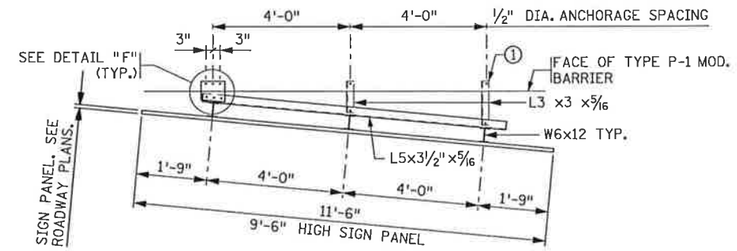

PLAN VIEW UPPER TRUSS

138" W x 114" H OVERHEAD SIGN PANEL

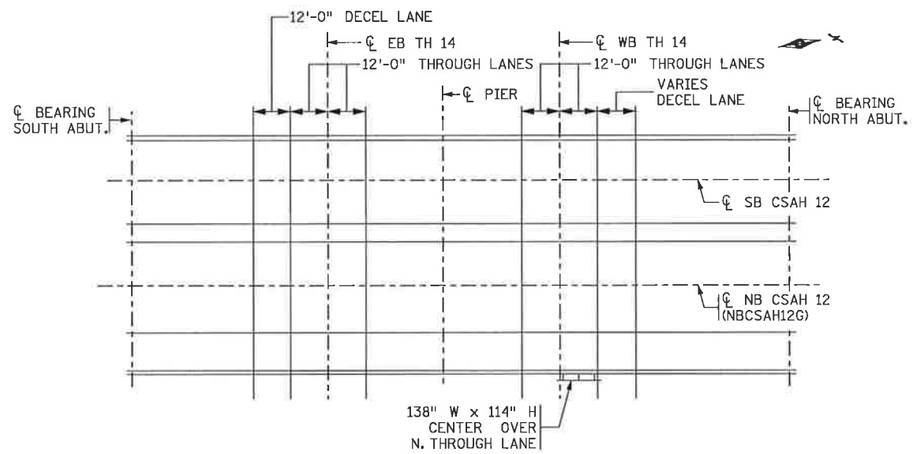

SIGN LOCATION

BR. 07587 - CSAH 12 OVER TH 14

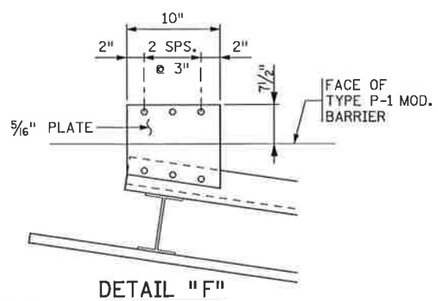

DETAIL "F"

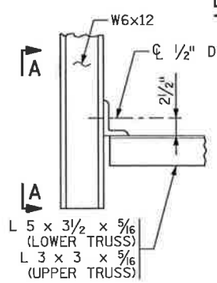

DETAIL "A"

TYPICAL AT PANEL MOUNTING POST

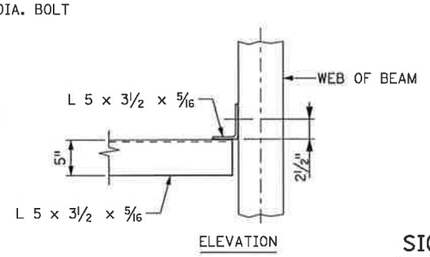

ELEVATION

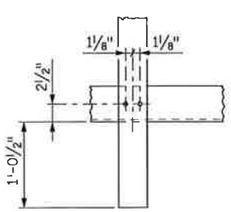

SECTION A-A

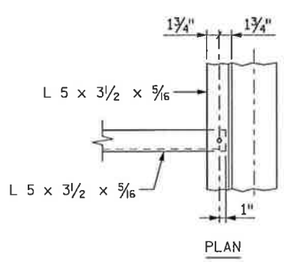

PLAN

DETAIL "B"

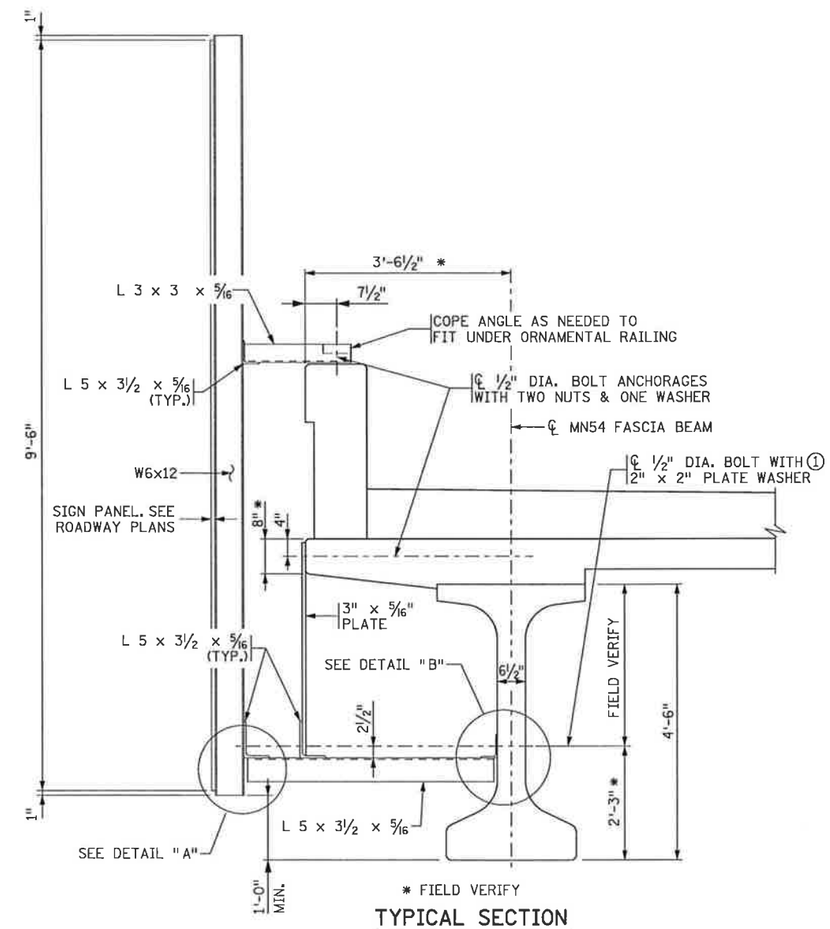

* FIELD VERIFY

TYPICAL SECTION

SIGN NOTES

SIGN SUPPORTS TO BE VERTICAL.

SIGN PANEL TO BE PLACED PERPENDICULAR TO ROADWAY UNDER. SEE ROADWAY PLANS FOR DETAILS OF SIGN PANELS AND PAYMENT.

ALL CONNECTIONS TO BE 1/2" DIA. BOLTS PER MN/DOT 3391 (A325), HOLES TO BE 5/16" DIA. EXCEPT AS NOTED.

CONCRETE ANCHORAGES SHALL BE CHEMICAL ADHESIVE TYPE AS APPROVED BY THE ENGINEER. ANCHOR RODS, PER 3385 TYPE A, SHALL BE 1/2" DIA. WITH A MIN. EMBEDMENT DEPTH OF 4 1/2" AND SHALL HAVE A MIN. ULTIMATE PULL-OUT STRENGTH OF 8000#.

ALL STRUCTURAL STEEL MATERIAL SHALL COMPLY WITH MN/DOT SPEC. 3306.

CONTRACTOR SHALL VERIFY DIMENSIONS BEFORE FABRICATION.

GALVANIZE BOLTS, NUTS & WASHERS PER MN/DOT SPEC. 3392. GALVANIZE ALL STRUCTURAL STEEL PER MN/DOT SPEC. 3394 AFTER FABRICATION.

PRICE BID FOR "STR-STEEL-TRUSSES FOR OH SIGNS BR MTD" INCLUDES ALL FURNISHING, GALVANIZING, FABRICATING, AND INSTALLING, HARDWARE & STRUCTURAL STEEL. CONCRETE ANCHORAGES SHALL BE FURNISHED AND INSTALLED AND SHALL BE INCIDENTAL.

1 FIELD VERIFY STRAND LOCATIONS. STRANDS SHALL NOT BE CUT OR DRILLED THROUGH.

NO	DATE	BY	CKD	APPR	REVISION

...\br\final\plan\6962_det04.dgn

I hereby certify that this plan, specification, or report was prepared by me or under my direct supervision and that I am a duly Licensed Professional Engineer under the laws of the State of Minnesota.

Print Name: JANET ELIZABETH GRONERT

Janet Elizabeth Gronert

Date 2/21/12 License # 44325

STATE PROJ. NO.	DRAWN BY
0702-116	E. JOHNSON
	DESIGNED BY L. RENSTROM
BRIDGE NO.	CHECKED BY J. GRONERT
07587	COMM. NO. 6962

SRF CONSULTING GROUP, INC.

BLUE EARTH COUNTY

OVERHEAD SIGN DETAILS

CSAH 12 OVER TH 14

SHEET B43 OF B43

11:00:12 AM
2/9/2012
N:\projects\6962\br\final\plan\6962_det04.dgn